SERVICE BULLETIN

M1660 2024-10-16

M1660: VOLTAGE REGULATOR HARNESS ROUTING

Reason for Revision

Table 1

Table 1. Document History

Date	Rev	Revision (Rev) Description
2024-10-16	-	Initial release

Purpose for Service Bulletin

This bulletin instructs technicians to properly route the voltage regulator wire harness when performing service work on or around the regulator. Attention needs to be given that proper harness routing is achieved during reassembly.

Incorrect routing of the voltage regulator harness, could cause damage to the harness due to unintended chaffing against the engine case.

Required Dealer Action

Table 2. Required Dealer Action

Category	Description	Required
1	Must Perform Repair	☐
2	Repair If Presenting Symptom	☐
3	Feature Pack- Customer/Dealer Paid	☐
4	Informational Purposes Only	☑ ☐

Vehicles Affected

2023: CVO Street Glide (FLHXSE), CVO Road Glide (FLTRXSE)

2024: Street Glide (FLHX), Road Glide (FLTRX), CVO Street Glide (FLHXSE), CVO Road Glide (FLTRXSE), CVO Road Glide ST (FLTRXSTSE)

Markets Affected

All markets affected.

Repair Procedure

NOTE

There is enough excess slack to incorrectly route the voltage regulator harness.

1. See Figure 1 and Figure 2. Make sure to properly route the voltage regulator harness (1).

2. See Figure 3. Make sure to route the voltage regulator harness (2) in the engine case pocket (1). Avoid contacting or routing the voltage regulator harness, against the corner of the engine case as depicted by the arrows.

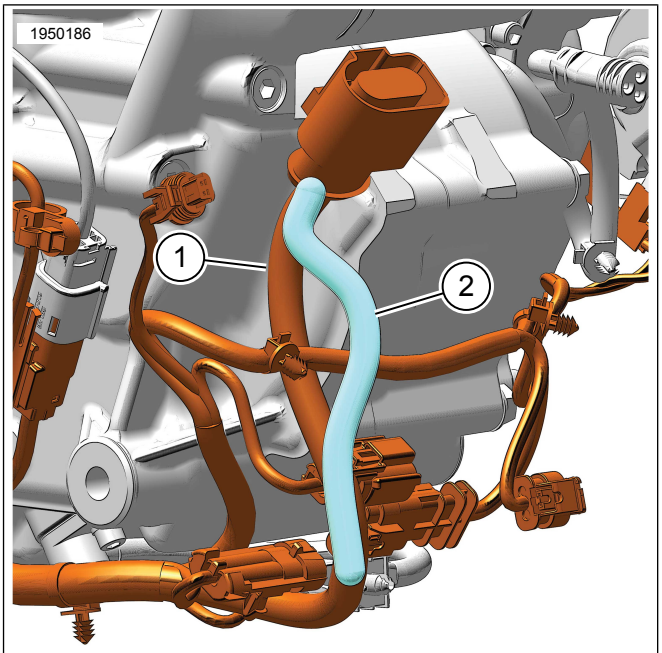

1. Correct harness routing
2. Incorrect harness routing

Figure 1. Correct vs Incorrect Harness Routing

NOTE

In the interest of preserving customer safety and satisfaction, always check for outstanding recalls whenever any motorcycle is brought into your dealership for either maintenance or service.

ROUTING	SERVICE MANAGER	SALES MANAGER	PARTS MANAGER	WARRANTY PROCESS MANAGER	LEAD TECHNICIAN	TECHNICIAN NO. 1	TECHNICIAN NO. 2	TECHNICIAN NO. 3	RETURN THIS TO
INITIAL HERE									

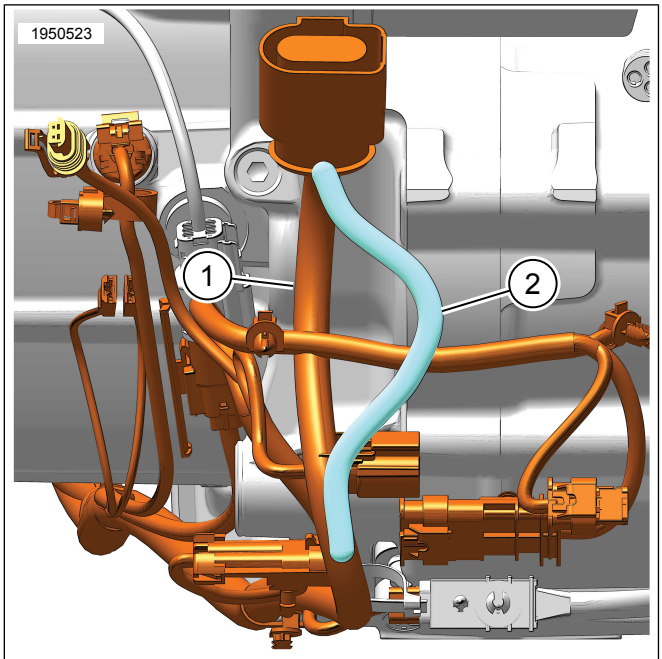

1. Correct harness routing
2. Incorrect harness routing

Figure 2. Correct vs Incorrect Harness Routing

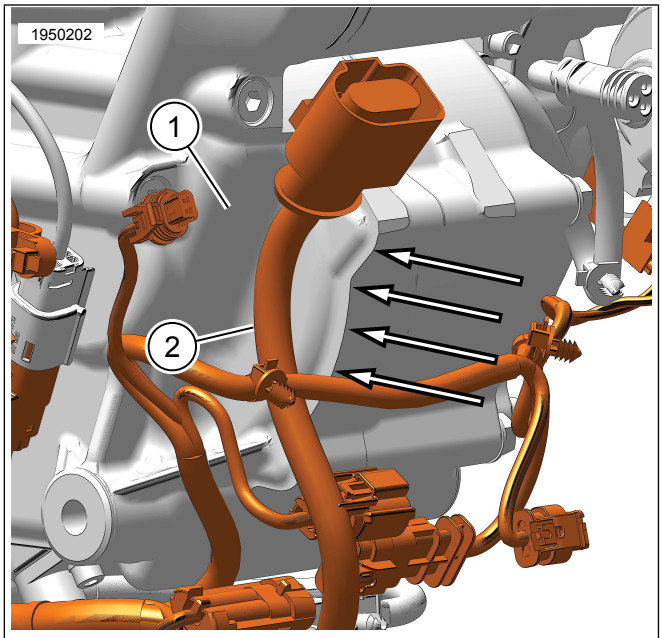

1. Engine case pocket
2. Engine harness in engine case pocket

Figure 3. Harness Routed in Engine Case Pocket