Service Bulletin

Bulletin No.: 24-NA-156

Date: August, 2024

TECHNICAL

Subject: **Information on Dealer Installed Accessory Trailer Hitch Installation Concern**

Brand:	Model:	Model Year:		VIN:		Engine:	Transmis-sion:
		from	to	from	to		
Chevrolet	Equinox EV	2024	2024	SOP	July 30, 2024	All	All

Involved Region or Country	North America
Additional Options (RPOs)	Equipped with Package Option 1LT, 2LT, or 3LT, RPO's SDE and SDR.
Condition	During the installation process, dealers may find that the scribe lines may not be present for cutting.
Cause	The supplier removed these necessary lines by mistake.
Correction	If the vehicle is found to not have visible scribe lines, please follow the direction below.

Important: Service agents must comply with all International, Federal, State, Provincial, and/or Local laws applicable to the activities it performs under this bulletin, including but not limited to handling, deploying, preparing, classifying, packaging, marking, labeling, and shipping dangerous goods. In the event of a conflict between the procedures set forth in this bulletin and the laws that apply to your dealership, you must follow those applicable laws.

Important: This technical service bulletin (TSB) can only be completed by certified repair facilities who have met all specific training, tool and equipment requirements pertaining to the vehicle Brand and Model serviced. Repairs must be performed by a technician who has successfully completed the required training.

Service Procedure

Refer to *Trailer Hitch Platform Package Installation* for installation within SI.

Copyright 2024 General Motors. All Rights Reserved.

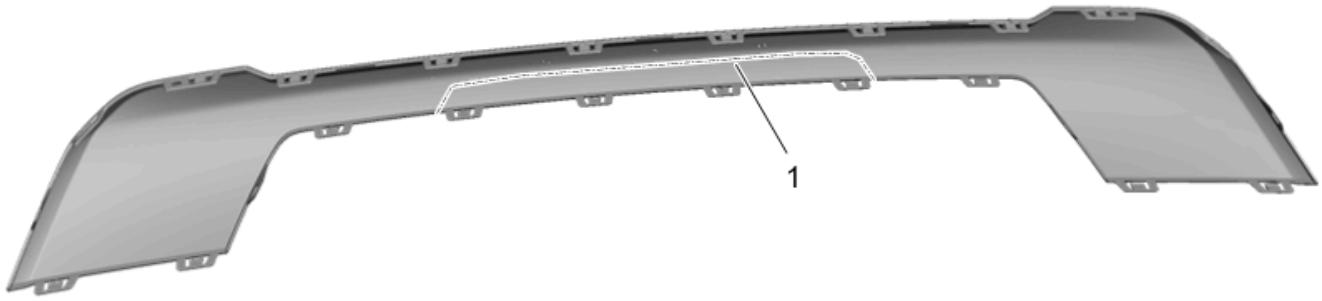

6692657

During Install, On the inside of the rear fascia skid plate, check to see if there is a scribed line (1) present in the location shown. If no scribed line is present, then a new rear fascia skid plate P/N 85629520 must be ordered before proceeding to the next step.

Dealers will be directed to contact the supplier for P/N 85629520 which will have the scribe lines present. The supplier will send them to dealers free of charge. Please contact (Contact Information redacted).

Warranty Information

For vehicles repaired under warranty, use:

Labor Operation	Description	Labor Time
2210500	Trailer Hitch Platform Replacement	Use Published Labor Operation Time

Version	1
Modified	Released August 15, 2024

GM bulletins are intended for use by professional technicians, NOT a "do-it-yourselfer". They are written to inform these technicians of conditions that may occur on some vehicles, or to provide information that could assist in the proper service of a vehicle. Properly trained technicians have the equipment, tools, safety instructions, and know-how to do a job properly and safely. If a condition is described, DO NOT assume that the bulletin applies to your vehicle, or that your vehicle will have that condition. See your GM dealer for information on whether your vehicle may benefit from the information.

WE SUPPORT VOLUNTARY TECHNICIAN CERTIFICATION