Dan Wilyard
Chief Engineer Recall
Service Engineering Operations
Ford Customer Service Division

Ford Motor Company
PO Box 1904
Dearborn, Michigan 48121

July 3, 2024

TO: All U.S. Ford and Lincoln Dealers

SUBJECT: **Customer Satisfaction Program 24N01**
Certain 2020-2022 Model Year Explorer Vehicles
Rear Axle Bolt Fractures

PROGRAM TERMS

This program provides a no-cost, one-time repair (if needed) to the rear axle bolt for 6 years of service or 150,000 miles from the warranty start date of the vehicle, whichever occurs first.

This is a one-time repair program.

If a vehicle has already exceeded either the time or mileage limits, this no-cost, one-time repair will last through July 31, 2025.

Coverage is automatically transferred to subsequent owners.

VEHICLES COVERED BY THIS PROGRAM

Vehicle	Model Year	Assembly Plant	Build Dates
Explorer	2020	Chicago	October 19, 2018 through September 27, 2020
	2021	Chicago	June 4, 2020 through November 10, 2021
	2022	Chicago	June 29, 2021 through June 4, 2022

U.S. population of affected vehicles: 309,126. Affected vehicles are identified in OASIS.

REASON FOR PROVIDING A NO-COST, ONE-TIME REPAIR

In some of the affected vehicles, the rear axle bolt may fracture. A fractured rear axle bolt will allow the rear axle housing to move out of position, resulting in severe noise and vibration. If the rear axle bolt breaks, the driveshaft or half shafts may become disconnected, resulting in loss of transmission torque to the rear wheels. Transmission torque is necessary to hold the vehicle in park and is also needed for the vehicle to move forward or backward.

SERVICE ACTION

If an affected vehicle exhibits a fractured rear axle bolt, dealers are to replace the rear axle bolt, rear differential cover and subframe bushing. This service must be performed on all affected vehicles at no charge to the vehicle owner.

To assist vehicle owners to have this repair completed when parts are available, dealers should:

- Arrange to pick up the owner's vehicle and drive it to the dealership for repairs.
    - Re-deliver the owner's vehicle after repairs have been completed.
- Pick-Up & Delivery service should be made available for all customers. Refer to the Rental and Claiming sections for further details.

© Copyright 2024 Ford Motor Company

ESSENTIAL SPECIAL SERVICE TOOLS

If you do not have the special tools needed, please contact 1-800 ROTUNDA and choose option 3 to place an order to purchase.

OWNER NOTIFICATION MAILING SCHEDULE

Owner Letters are expected to be mailed the week of July 15, 2024. Dealers should repair any affected vehicles that experience Rear Axle Bolt Fractures, whether or not the customer has received a letter.

ATTACHMENTS

- Administrative Information
- Labor Allowances and Parts Ordering Information
- Technical Instructions
- Mobile Service Repair Assessment
- Vehicle Pick-Up & Delivery Record
- Owner Notification Letter

QUESTIONS & ASSISTANCE

For questions and assistance, contact the Special Service Support Center (SSSC) via the SSSC Web Contact Site. The SSSC Web Contact Site can be accessed through the Professional Technician System (PTS) website using the SSSC link listed at the bottom of the OASIS VIN report screen or listed under the SSSC tab.

Sincerely,

Dan Wilyard

Dan Wilyard

© Copyright 2024 Ford Motor Company

Customer Satisfaction Program 24N01

MOBILE SERVICE REPAIR ASSESSMENT LEVEL

- All repairs in this program have the following assessment level.
  - Not a Mobile Service Repair

OASIS ACTIVATION

OASIS will be activated on July 3, 2024.

FSA VIN LISTS ACTIVATION

FSA VIN Lists will not be activated for this service action.

SOLD VEHICLES

- Only owners with affected vehicles that exhibit the covered condition will be directed to dealers for repairs.
- Dealers are to prioritize repairs of customer vehicles over repairs of new and used vehicle inventory.

STOCK VEHICLES

- Do not perform this program unless the affected vehicle exhibits the covered condition.

BRANDED / SALVAGED TITLE VEHICLES

Vehicles with canceled warranties are not eligible for this service action.

OWNER REFUNDS

Refunds are approved for this program.

- Ford Motor Company is offering a refund for owner-paid repairs covered by this program if the repair was performed before the date of the Owner Notification Letter. This refund offer expires January 31, 2025.
- Dealers are also pre-approved to refund owner-paid emergency repairs that were performed away from an authorized servicing dealer after the date of the Owner Notification Letter. Non-covered repairs, or those judged by Ford to be excessive, will not be reimbursed.
- Refunds will only be provided for the cost associated with Rear Axle Bolt Fractures.

RENTAL VEHICLES

The use of rental vehicles is not approved for this program.

TOWING

If towing is required, dealers are authorized to claim up to a maximum value of $250 to provide towing services for this program.

PICK-UP & DELIVERY- Participating Dealers

Dealers participating in the Remote Experience Program:

- Ford Dealers - Refer to EFC14125, 2024 Remote Experience Program, Pick-Up & Delivery Offset section for additional details.

© Copyright 2024 Ford Motor Company

Customer Satisfaction Program 24N01

PICK-UP & DELIVERY- Non-participating Dealers

Ford Dealers not participating in the 2024 Remote Experience Program for Pick-Up & Delivery are authorized to claim unique services for completing this program.

- Dealers are authorized to claim one-half labor hour per repair for vehicle Pick-Up & Delivery services. Refer to Labor Allowances for details.
- Dealers must retain a Vehicle Pick-Up & Delivery Record with the repair order documentation.

REPAIR PHOTO SUBMISSION

Ford has requested photo evidence prior to performing the repair for this FSA.

- The SSSC must provide approval prior to performing the repair.
- Contact the SSSC and upload the necessary photo or copy of documentation as an attachment for review. Please include a picture of the VIN Plate, a picture of the current vehicle mileage and a picture of the fractured rear axle bolt. This can be done in two ways:
    - Directly in the SSSC contact request form while submitting your contact on your desktop.
    - Via PTS Mobile under the Images / Files Upload menu selection
        - You should select SSSC in the sub-menu and ensure your P&A code is correct. Upload the photo(s) by selecting the appropriate FSA with the option to use a prior contact ID. These photo(s) will be associated with your SSSC contact during submission.
        - If you have not submitted a SSSC contact yet, then you can still upload the photo(s) via PTS Mobile, and the photo(s) will be available when opening your SSSC contact for this VIN and recall.
- Upon approval, the SSSC will provide an approval code that must be used for claiming.

ADDITIONAL REPAIR (LABOR TIME AND/OR PARTS)

Additional repairs identified as necessary to complete the FSA should be managed as follows:

- For related damage and access time requirements, refer to the Warranty and Policy Manual – Section 6 – Ford & Lincoln Program Policies / General Information & Special Circumstances for FSA's / Related Damage.
- For vehicles within new vehicle bumper-to-bumper warranty coverage, no SSSC approval is required, although related damage must be on a separate repair line with the Related Damage radio button checked.
    - Ford vehicles – 3 years or 36,000 miles
- For vehicles outside new vehicle bumper-to-bumper warranty coverage, submit an Approval Request to the SSSC Web Contact Site before completing the repair.

© Copyright 2024 Ford Motor Company

Customer Satisfaction Program 24N01

CLAIMS PREPARATION AND SUBMISSION

- **Technician Competency Requirement:** The STST Competency 10 certification requirement in the U.S. market only will be enforced starting with repair orders opened on or after April 1, 2024. FSA repairs will reject if the repairing technician is not certified in STST Competency 10 FSA. See EFC14251 for more details.
- **Note**: All repairs for this program should be claimed using the claim entry direction below regardless if the vehicle is still under the New Vehicle Limited Warranty.
  - Service Part Warranty (SPW) and/or Ford/Lincoln Loyalty Plans (ESP) eligible vehicles – Claim repairs to FSA 24N01 if the vehicle is still within time and mileage limits.
- **Claim Entry**: Enter claims using Dealer Management System (DMS) or One Warranty Solution (OWS) online.
  - When entering claims:
    - Claim type 31: Field Service Action
    - Sub Code: 24N01
    - Customer Concern Code (CCC): K18 – Rear Drive Unit (RDU)
    - Condition Code (CC): 01 – Broken/Cracked
    - Causal Part Number: 4001, Quantity 0
  - For additional claims preparation and submission information, refer to the Recall and Customer Satisfaction Program (CSP) Repairs in the OWS User Guide.
- **Related Damage/Additional labor and/or parts**: Must be claimed as Related Damage on a separate repair line from the FSA with the same claim type and subcode as described in Claim Entry above.

  IMPORTANT: Click the Related Damage Indicator radio button.
- **Refunds:** Submit refunds on a separate repair line.

  - Program Code: 24N01 - Misc. Expense: ADMIN
  - Misc. Expense: REFUND - Misc. Expense: 0.2 Hrs.

  - Multiple refunds should be submitted on one repair line and the invoice details for each repair should be detailed in the comments section of the claim.
- **Pick-Up & Delivery:**
  - Dealers participating in the Remote Experience Program –
    - Refer to EFC14125, 2024 Remote Experience Program, Pick-Up & Delivery (PDL) Offset section for additional details.
  - Dealers NOT participating in the Remote Experience Program –
    - Dealers may claim one-half labor hour per repair for vehicle Pick-Up & Delivery services.
    - Dealers must retain a Vehicle Pick-Up & Delivery Record with the repair order documentation.

© Copyright 2024 Ford Motor Company

CLAIMS PREPARATION AND SUBMISSION (Continued)

- **Provision for Locally Obtained Supplies:** Includes Loctite® 263 Red High Strength Threadlocker or equivalent. Submit on the same line as the repair.
  - Program Code: 24N01
  - Misc. Expense: OTHER
  - Misc. Expense: Claim up to $2.00 (If claiming both local supplies and towing, $252.00 total for Misc. Expense: Other)
- **Provision for Towing:** Dealers are authorized to claim up to a maximum value of $250 to provide towing services for completing this program. Submit on the same line as the repair.
  - Program Code: 24N01
  - Misc. Expense: OTHER
  - Misc. Expense: Claim up to $250.00 (If claiming both local supplies and towing, $252.00 total for Misc. Expense: Other)

© Copyright 2024 Ford Motor Company

Customer Satisfaction Program 24N01

LABOR ALLOWANCES

Description	Labor Operation	Labor Time
Replace the rear subframe bushing, mounting bolt, REPLACE rear differential cover. Includes time to use Mini-Ductor (Or equivalent) to only heat Rear-Differential-Unit (RDU) Front Bushing bolts, drilling the bushing and/or rust/corrosion factor. **Note:** To claim this labor operation, a SSSC approval code is needed during the repair and claim approval process.	24N01E	3.6 Hour(s)
Vehicle Pick-Up & Delivery Allowance: This allowance is only for non-eligible 2023 Remote Experience Program Dealers. **Note:** This allowance is for dealer-performed vehicle Pick-Up & Delivery for dealership repairs only. Can only be claimed once, regardless of outstanding FSAs repaired.	24N01PP	0.5 Hour(s)
Time allowed to submit photos. **Note:** To claim this labor operation, a SSSC approval code is needed during the repair and claim approval process.	24N01ZZ	0.2 Hour(s)

PARTS REQUIREMENTS / ORDERING INFORMATION

Special Program Part Ordering:

To place an order for the Circlips and Updated Bushing, submit a Special Program order in the DOW system. **SSSC contact is not required to order K-Coded parts on this program**. More information can be found in EFC 10642.

Part Number	Description	Order Quantity	Claim Quantity
L1MZ-4B425-D	Revised Rear Subframe Bushing	1	1
-3B498-	Rear Axle Pinion Circlip **(All Applications)** (Vehicle specific part number – Refer to parts catalog)	1	1
L1MZ-3B498-*	Rear - Inner Halfshaft Circlip **(All Applications)** (Vehicle specific part number – Refer to parts catalog)	2	2

Dealers will be notified via a DOES II communication if circumstances warrant a change in part supply strategy and when open ordering resumes.

© Copyright 2024 Ford Motor Company

PARTS REQUIREMENTS / ORDERING INFORMATION (Continued)

Order the parts below through normal order processing channels:

Parts Required for Subframe Bushing Replacement		Order Quantity	Claim Quantity
L1MZ-4033-C	Differential Axle Cover Housing	1	1
W719362-S439	Toe Link to Knuckle Bolt (1 required – 4 in a pack)	1	1
W520516-S441	Toe Link to Knuckle Nut	1	1
W714297-S440	Lower Arm to Knuckle Nut (1 required – 2 in a pack)	1	1
W720988-S439	Differential Axle Rear Cover Housing Bolt to Rear Subframe (M14X118MM) (1 required – 4 in a pack)	1	1
W717867-S900	Differential Axle Front Bushing Housing Support Bolts to Subframe (M14X132MM) (2 required – 4 in a pack)	1	2
W719459-S439	Upper Arm to Knuckle Bolt (1 required – 4 in a pack)	1	1
W520214-S440	Upper Arm to Knuckle Nut (1 required – 2 in a pack)	1	1
W720034-S440	Shock Absorber Lower Nut (1 required – 4 in a pack)	1	1
LB5Z-3B477-A	Wheel Hub Nut	1	1
W717822-S439	Driveshaft Center Bearing Bolts (2 required – 4 in a pack)	1	2
W719511-S439	Flexplate Coupling to Transmission Bolts (3 required – 4 in a pack)	1	3
XG-1-E1	Grease	As Required	
L1MZ-3C084-A	Halfshaft Seal	2	2
W719430-S439	Brake Caliper Bolts (2 required – 4 in a pack)	1	2
XY-75W85-QL	Differential Oil	2	2
Obtain Locally	Loctite® 263 Red High Strength Threadlocker or equivalent. NOTE: If Threadlocker availability is not available in your Market, replace the required fasteners per Workshop Manual specifications.	1 tube will service many vehicles	
TA-26	Motorcraft® Red High Strength Threadlocker or equivalent – Specification WSK-M2G351-A6. **NOTE:** Check original fastener Threadlock color when removing, cleaning and re-using the fasteners. **NOTE:** If Threadlocker availability is not available in your Market, replace the required fasteners per Workshop Manual specifications.	1 tube will service many vehicles	
TA-29	Silicone Sealant	As Required	

© Copyright 2024 Ford Motor Company

PARTS REQUIREMENTS / ORDERING INFORMATION (Continued)

NOTE: Part numbers may change or supersede to a new service level service part number during the duration of this recall. For the latest and greatest part number, you may also refer to the parts catalog, enter vehicle specific VIN number and order the correct specific parts during the repair.

DEALER PRICE

For the latest prices, refer to DOES II.

PARTS RETENTION, RETURN, & SCRAPPING

Follow the provisions of the Warranty and Policy Manual, Section 1 - WARRANTY PARTS RETENTION AND RETURN POLICIES. If a replaced part receives a scrap disposition, the part must be scrapped by all applicable local, state, and federal environmental protection and hazardous material regulations.

EXCESS STOCK RETURN

The excess stock returned for credit must have been purchased from Ford Customer Service Division by Policy Procedure Bulletin 4000.

REPLACED FSA PARTS INSPECTION AND SIGN OFF

Effective March 1st, 2021, all parts replaced as part of an FSA repair with a repair order open date of March 1st, 2021, or later must be inspected and signed off on the repair order by a member of your dealer fixed operations management team or an employee the task has been delegated to. If the task is to be delegated to a non-management employee, the employee needs to be someone other than the technician who completed the repair and needs to understand the importance of completing this task consistently and accurately.

- All parts replaced as part of an FSA repair should be returned to the parts department following the Warranty Parts Retention and Return Policies.
- Inspect the replaced parts to verify the FSA repair was completed.
- If the FSA repair is found to be complete, the designated employee signs the repair order line or parts return stamp area (electronic or hand signed) for the FSA repair indicating the parts were inspected and validated to have been replaced.
- After the parts have been inspected, they should be handled based on the guidance in the parts status report in the Online Warranty System (Hold, Return, CORE, Scrap, etc.). Please visit FMCDEALER > PARTS & SERVICE > WARRANTY ADMINISTRATION & WARRANTY PARTS RETURN for the latest Immediate Scrap List information.
- This process is subject to review during warranty audits for FSA repairs with a repair order open date of March 1st, 2021, or later. Any eligible FSA claims requiring parts replacement found not to have been inspected and signed off during a warranty audit will be subject to chargeback and consideration for enrollment into the Dealer Incomplete Recall Repair Process.

© Copyright 2024 Ford Motor Company

REPLACED FSA PARTS INSPECTION AND SIGN OFF (Continued)

Note: Other approvals (electronic or handwritten) for add-on repair lines, dealer-owned vehicle repairs, and repeat repairs do not qualify as FSA parts inspection approvals. The post-repair FSA parts inspection process (electronic or handwritten) is independent of other warranty approval requirements. The approval by the designated employee implies that the FSA parts were found to be replaced and must be able to be identified on the Repair Order. If multiple FSAs require approval on a single Repair Order, each applicable occurrence will require individual post-repair approval by the designated employee.

© Copyright 2024 Ford Motor Company

Ford Motor Company
Ford Customer Service Division
PO Box 1904
Dearborn, Michigan 48121

July 2024

Customer Satisfaction Program 24N01

Mr. John Sample
123 Main Street
Anywhere, USA 12345

12345678901234567

At Ford Motor Company, we are committed not only to building high-quality, dependable products but also to building a community of happy, satisfied customers. To demonstrate that commitment, we are providing a no-charge Customer Satisfaction Program for your vehicle.

Why are you receiving this notice?

On your vehicle, it may be possible that a rear axle mounting bolt may fracture during vehicle acceleration.

What is the effect?

This one-time repair of the rear axle bolt is available for a total of 6 years or 150,000 miles from the warranty start date, whichever occurs first.

NOTE: In some of the affected vehicles, the rear axle bolt may fracture. A fractured rear axle bolt will allow the rear axle housing to move out of position, resulting in severe noise and vibration. If the rear axle bolt breaks, the driveshaft or half shafts may become disconnected, resulting in loss of transmission torque to the rear wheels. Transmission torque is necessary to hold the vehicle in park and is also needed for the vehicle to move forward or backward.

If your vehicle has already exceeded either time or mileage limits listed above, this one-time repair offer will last through January 31, 2025. Coverage is automatically transferred to subsequent owners.

What will Ford and your dealer do?

If your vehicle's rear axle housing requires replacement due to a rear axle bolt fracture and your vehicle is within the indicated time/mileage limitations, Ford Motor Company has authorized your dealer to repair the rear axle bolts free of charge (parts and labor). This is a one-time repair program.

How long will it take?

If the component mentioned above requires replacement, the time needed for this repair is less than one-half day. However, due to service scheduling requirements, your dealer may need your vehicle for a longer period of time.

What should you do?

You do not need to return to your dealer for this repair unless you have a rear axle bolt fracture or you experience severe noise and/or vibration from the rear axle.

© Copyright 2024 Ford Motor Company

What should you do? (continued)

Please keep this letter as a reminder of the one-time repair offer for your rear axle bolt and housing. If the rear axle bolt and housing requires replacement, and your vehicle is within the indicated time/mileage limitations, contact your dealer to schedule a service appointment for Customer Satisfaction Program 24N01. Your dealer will replace the part at no charge.

If you do not already have a servicing dealer, you can access ford.com/support for dealer addresses, maps, and driving instructions.

NOTE: You can receive information about Recalls and Customer Satisfaction Programs through our FordPass App. The app can be downloaded through the App Store or Google Play. In addition, there are other features such as reserving parking in certain locations and controlling certain functions on your vehicle (lock or unlock doors, remote start) if it is equipped to allow control.

Pick-Up and Delivery

Complimentary vehicle Pick-Up & Delivery service may also be available upon request through participating dealers. Your dealer will pick up your vehicle and return it with the repair completed.

Have you previously paid for this repair?

If you paid to have this service done before the date of this letter, you may be eligible for a refund. Refunds will only be provided for services related to repair description. To verify eligibility and expedite reimbursement, give your paid original receipt to your dealer before January 31, 2025. To avoid delays, do not send receipts to Ford Motor Company.

What if you no longer own this vehicle?

If you no longer own this vehicle and have an address for the current owner, please forward this letter to the new owner. You received this notice because our records indicate that you are the current owner.

Can we assist you further?

If you have difficulties getting your vehicle repaired promptly and without charge, please contact your dealership's Service Manager for assistance.

RETAIL OWNERS: If you have questions or concerns, please contact our **Ford Customer Relationship Center (CRC) at 1-866-436-7332** and one of our representatives will be happy to assist you. The CRC is open on weekdays from 8:00 AM – 11:00 PM and on Saturday 8:00 AM - 8:00 PM (Eastern Time). TTY/TDD users, please contact the CRC at the number listed using the Telecommunication Relay Service by dialing 711.

If you wish to contact us through the internet, our address is ford.com/support.

FLEET OWNERS: If you have questions or concerns, please contact our **Ford Pro Contact Center at 1-800-34-FLEET**, choose Option #1, and one of our representatives will be happy to assist you. If you wish to contact us through the Internet, our address is fleet.ford.com.

Representatives are available Monday through Friday: 7:00 AM – 11:00 PM and Saturday 7:00 AM – 5:00 PM (Eastern Time).

As part of the Ford community, we appreciate your attention to this important matter and your continued loyalty.

Ford Customer Service Division

© Copyright 2024 Ford Motor Company

CERTAIN 2020-2022 MODEL YEAR EXPLORER VEHICLES — REAR AXLE BOLT FRACTURES

SERVICE PROCEDURE

IMPORTANT! The Service Technician Specialty Training (STST) Competency 10 certification requirement, for U.S. market only, will be enforced starting with repair orders opened on or after April 1, 2024. Field Service Action (FSA) repairs will reject if the repairing technician is not certified in STST Competency 10 FSA. See Electronic Field Communication (EFC) 14251 for more details.

IMPORTANT! This procedure was modified from the original Workshop Manual (WSM) procedures. For this Field Service Action (FSA), multiple bolts and nuts will be cleaned and inspected for re-use. In addition, the Left Hand (LH) rear knuckle will not be fully disassembled when removing the LH rear halfshaft. Follow these technical instructions carefully.

NOTE: If you do not have the special tools referenced in the Workshop Manual (WSM) to perform the FSA repair, please contact 1-800 ROTUNDA and choose option 3 to place an order.

1. With the vehicle in NEUTRAL, position it on a hoist. Follow the WSM procedures in Section 100-02.

2. Ford has requested photo evidence of a broken or missing rear axle bolt for this Customer Satisfaction Program. Visually inspect the Rear Differential Unit (RDU) for a broken or missing RDU fastener. Is the RDU bolt to axle cover bushing boss broken or missing? See Figure 1.

   YES - Does Not Pass inspection. Submit photos of the broken or missing RDU axle bolt, refer to the Photo Request Submission on Pages 14 and 15. Wait for the Special Service Support Center (SSSC) approval to begin any repairs. Then, proceed to Step 3.

   NO - Passes inspection. No further action is required.

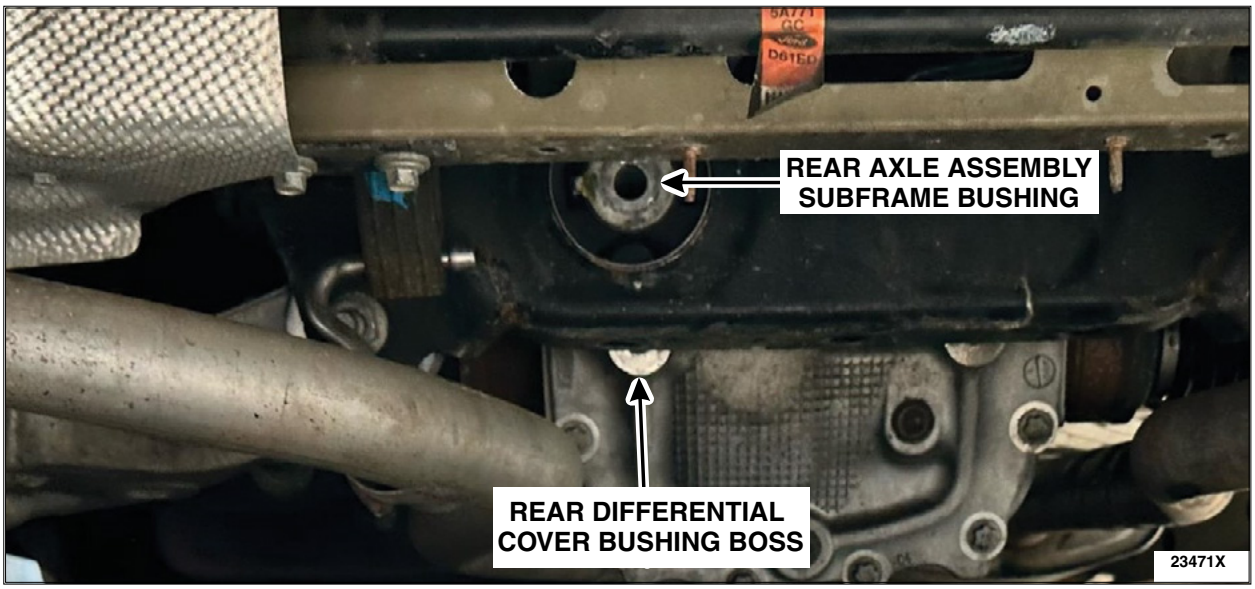

FIGURE 1

CPR © 2024 FORD MOTOR COMPANY
DEARBORN, MICHIGAN 48121
07/2024

3. Measure the distance from the center of the rear hub to the lip of the rear quarter panel with the vehicle in a level, static ground position (curb height).

4. Drain the rear differential fluid. Follow the Workshop Manual (WSM) procedures in Section 205-02.

NOTE: For this procedure it is not necessary to remove the wheel bearing, wheel hub, brake disc shield or lower arm vertical link.

NOTICE: Never pick up or hold the halfshaft by only the inner or outer CV joint. Damage to the CV joint will occur.

NOTICE: Never use a hammer to remove or install the halfshafts. Damage to the CV joint may occur.

NOTICE: Never use the halfshaft assembly as a lever to position other components. Damage to the halfshaft or CV joint may occur.

NOTICE: Do not allow the boots to contact sharp edges or hot exhaust components. Damage to the halfshaft boots will occur.

NOTICE: Do not drop assembled halfshafts. The impact may cut the boots from the inside without evidence of external damage.

NOTICE: Suspension fasteners are critical parts that affect the performance of vital components and systems. Failure of these fasteners may result in major service expense. Use the same or equivalent parts if replacement is necessary. Do not use a replacement part of lesser quality or substitute design. Tighten fasteners as specified.

NOTE: This procedure is only for the Left Hand (LH) side. Right Hand (RH) side shown, LH side similar.

5. Remove the LH rear wheel and tire. Follow the WSM procedures in Section 204-04A.

NOTICE: Do not attempt to jacking on the front control arm or rear control arm on any vehicle. Damage to control arms may occur.

NOTICE: Make sure that the insulator pads are correctly positioned to prevent direct contact with other components.

NOTE: The below procedures are only for the rear LH side of the vehicle.

CPR © 2024 FORD MOTOR COMPANY
DEARBORN, MICHIGAN 48121
07/2024

6. On the rear LH side of the vehicle, use a suitable jack to raise the suspension until the distance between the center of the hub and the lip of the fender is equal to the measurement taken in Step 3, (curb height). See Figure 2.

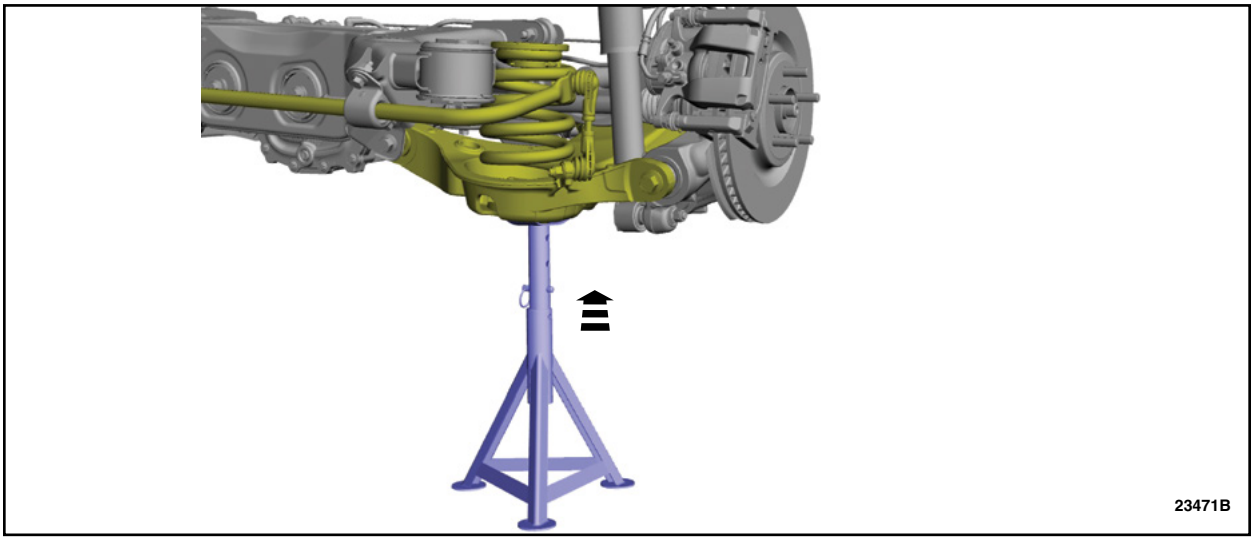

FIGURE 2

7. Remove and discard the LH rear wheel hub nut. See Figure 3.

   • Torque: 221 lb.ft (300 Nm).

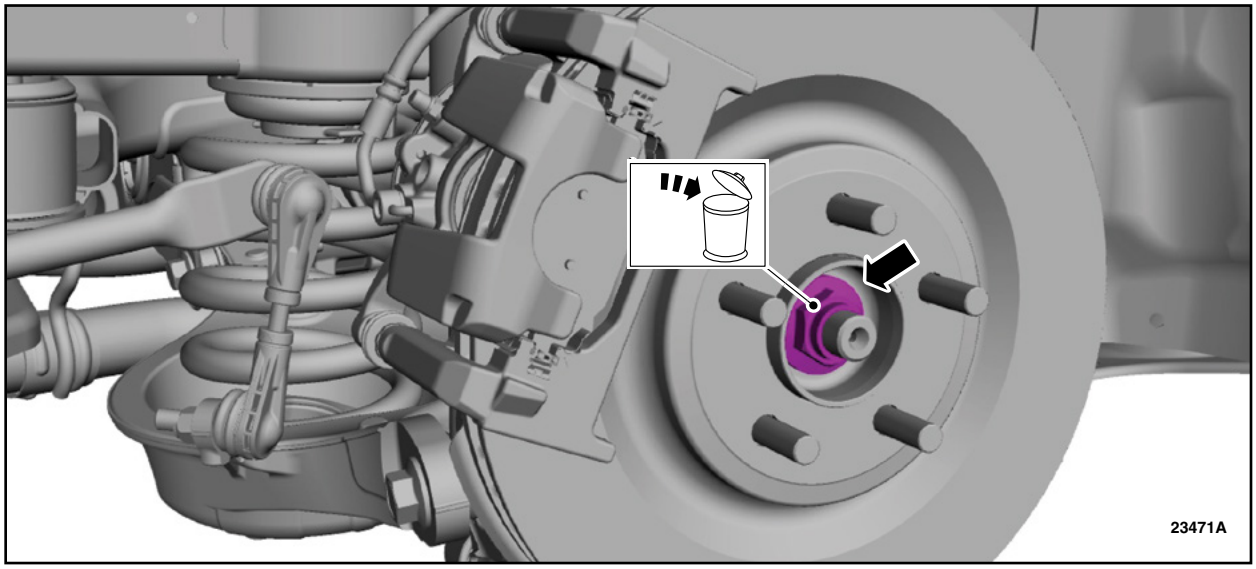

FIGURE 3

CPR © 2024 FORD MOTOR COMPANY
DEARBORN, MICHIGAN 48121
07/2024

8. Remove the LH rear brake disc. Follow the WSM procedures in Section 206-04.

    • Caliper anchor plate bolts Torque to: 122 lb.ft (165 Nm).

9. Remove and discard the LH rear shock absorber lower nut. See Figure 4.

    • Torque: 59 lb.ft (80 Nm).

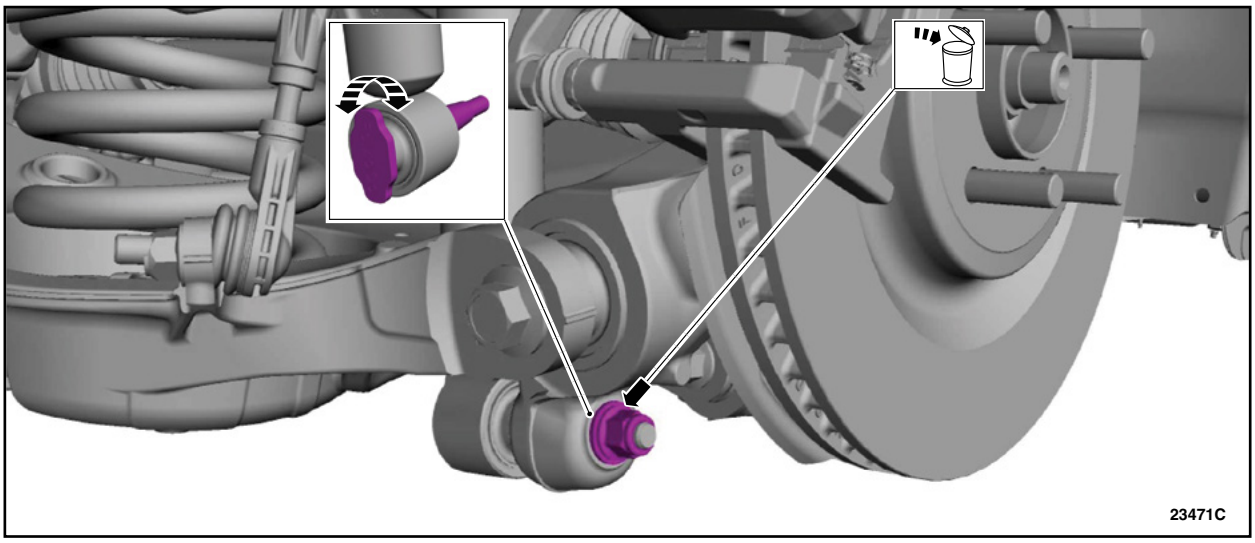

FIGURE 4

10. Remove the LH rear wheel speed sensor bolt and position the wheel speed sensor aside. Then, remove the brake hose bracket bolt and position the brake hose bracket aside. See Figure 5.

    • Brake hose bracket bolt torque: 133 lb.in (15 Nm).
    • Wheel speed sensor bolt torque: 133 lb.in (15 Nm).

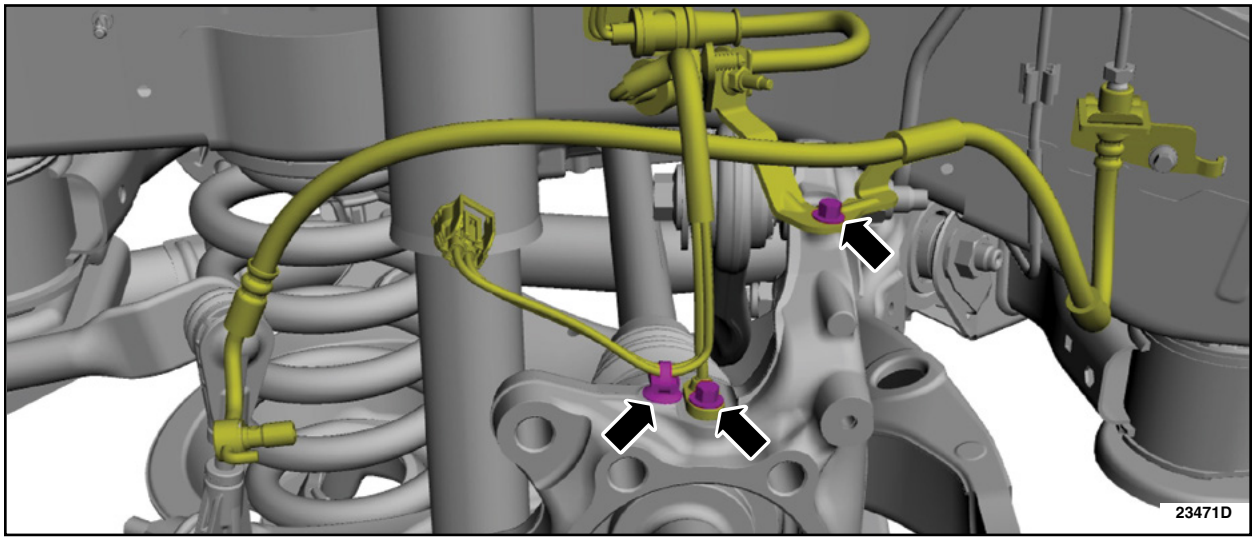

FIGURE 5

CPR © 2024 FORD MOTOR COMPANY
DEARBORN, MICHIGAN 48121
07/2024

11. Remove and discard the LH rear lower arm vertical link lower nut. Then, remove, clean and inspect the LH rear lower arm vertical link lower bolt threads. If the threads are not damaged, apply LOCTITE® 263™, or equivalent (Obtain locally), and reuse the bolt and order a *new* nut. If the threads are damaged order a *new* nut and bolt. See Figure 6.

    • Torque: 258 lb.ft (350 Nm).

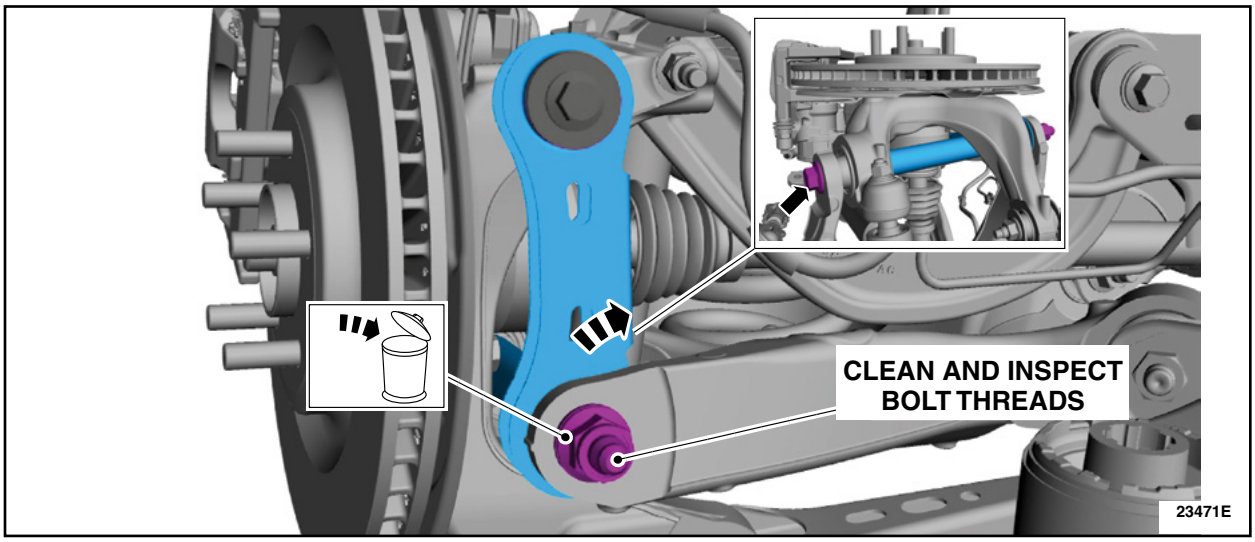

FIGURE 6

12. Remove and discard the LH rear toe link-to-wheel knuckle bolt and nut. See Figure 7.

    • Torque: 129 lb.ft (175 Nm).

NOTE: The wheel bearing and dust shield are removed for clarity.

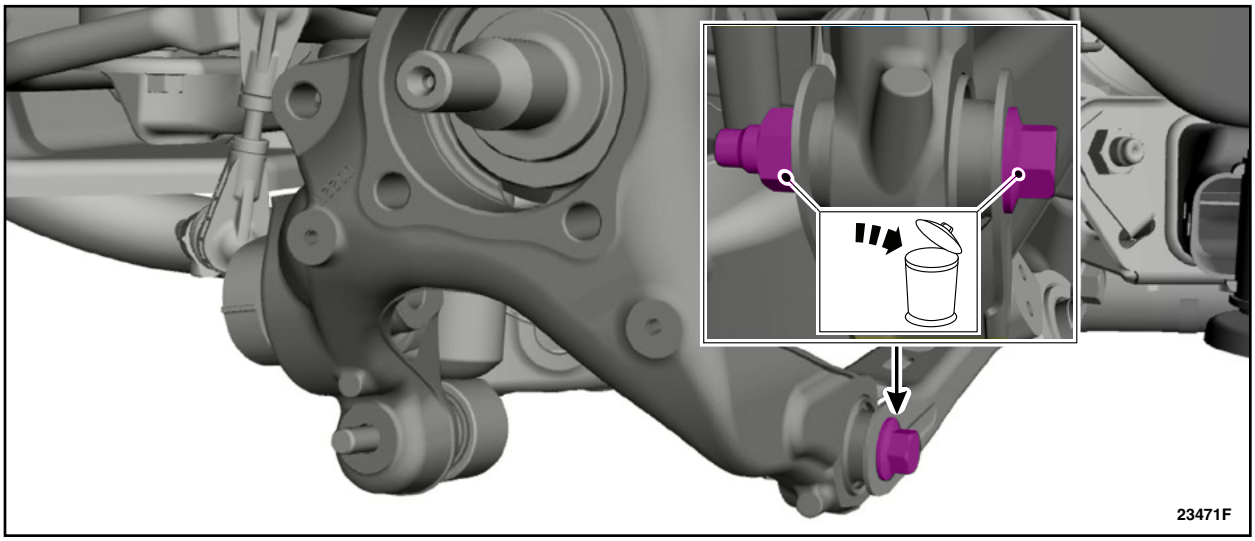

FIGURE 7

13. Position the LH rear knuckle up to remove halfshaft from the rear wheel knuckle.

14. Using a pry bar, remove the LH rear halfshaft from the rear axle assembly.

CPR © 2024 FORD MOTOR COMPANY
DEARBORN, MICHIGAN 48121
07/2024

15. Using a pry bar, disengage the RH rear halfshaft inner cir-clip from the rear axle assembly. See Figure 8.

NOTE: It is not necessary to remove the RH rear halfshaft from the vehicle.

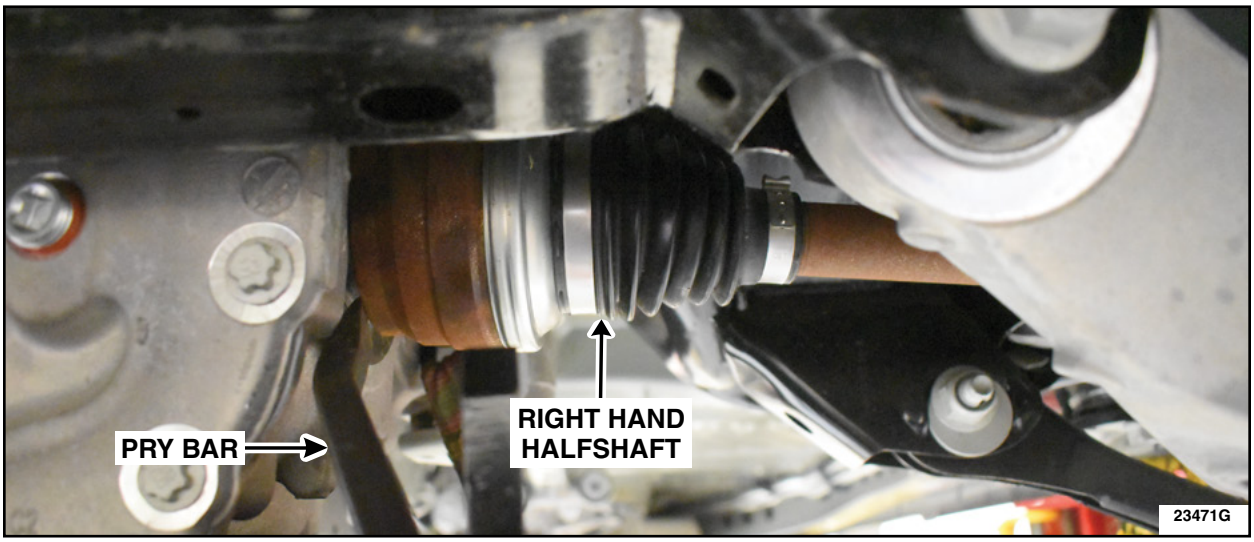

FIGURE 8

16. Secure the rear axle assembly to the transmission jack using a ratchet strap. See Figure 9.

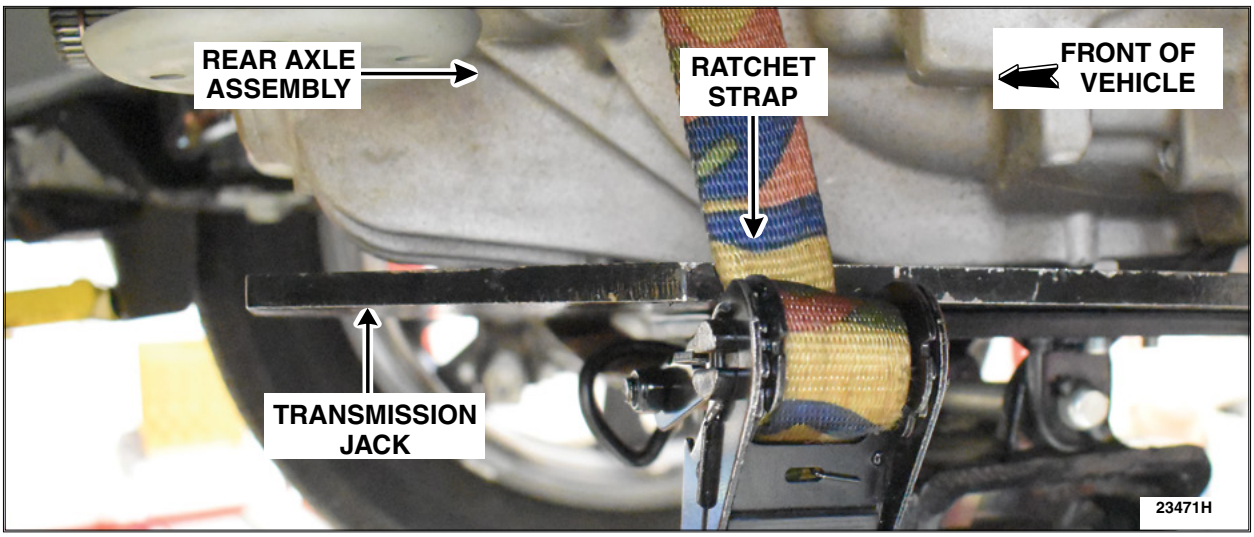

FIGURE 9

CPR © 2024 FORD MOTOR COMPANY
DEARBORN, MICHIGAN 48121
07/2024

NOTE: In the next Step, the muffler, tailpipe, and underbody shields must be removed before removing the rear driveshaft. In addition, it is not necessary to remove the exhaust flexible pipe.

17. Remove the rear driveshaft. Follow the WSM procedures in Section 205-01.

- 100-001 (T50T-100-A) - Slide Hammer
- 205-832 - Remover, Halfshaft

18. Disconnect and position the axle assembly vent hose aside. See Figure 10.

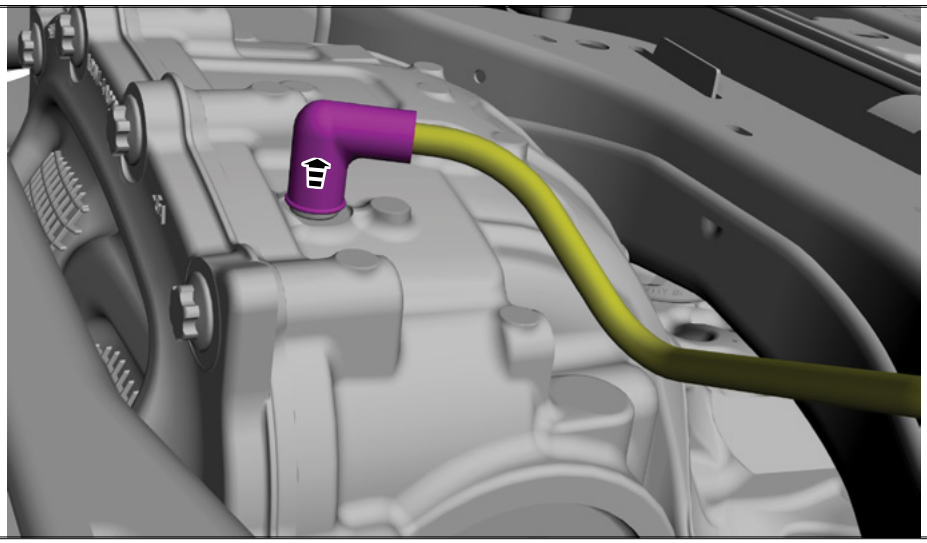

FIGURE 10

CPR © 2024 FORD MOTOR COMPANY
DEARBORN, MICHIGAN 48121
07/2024

19. Using a flameless heat tool, such as the Rotunda Mini-Ductor II (part number IDIMD-700) or equivalent, heat up both front rear axle housing support bolts, as shown in Figure 11. Using a breaker bar, loosen both bolts. Then remove and discard both rear axle housing support bolts. See Figure 12.

    • Torque: 129 lb.ft (175 Nm).

NOTE: The use of this tool is only to be used on the front RDU axle bolts.

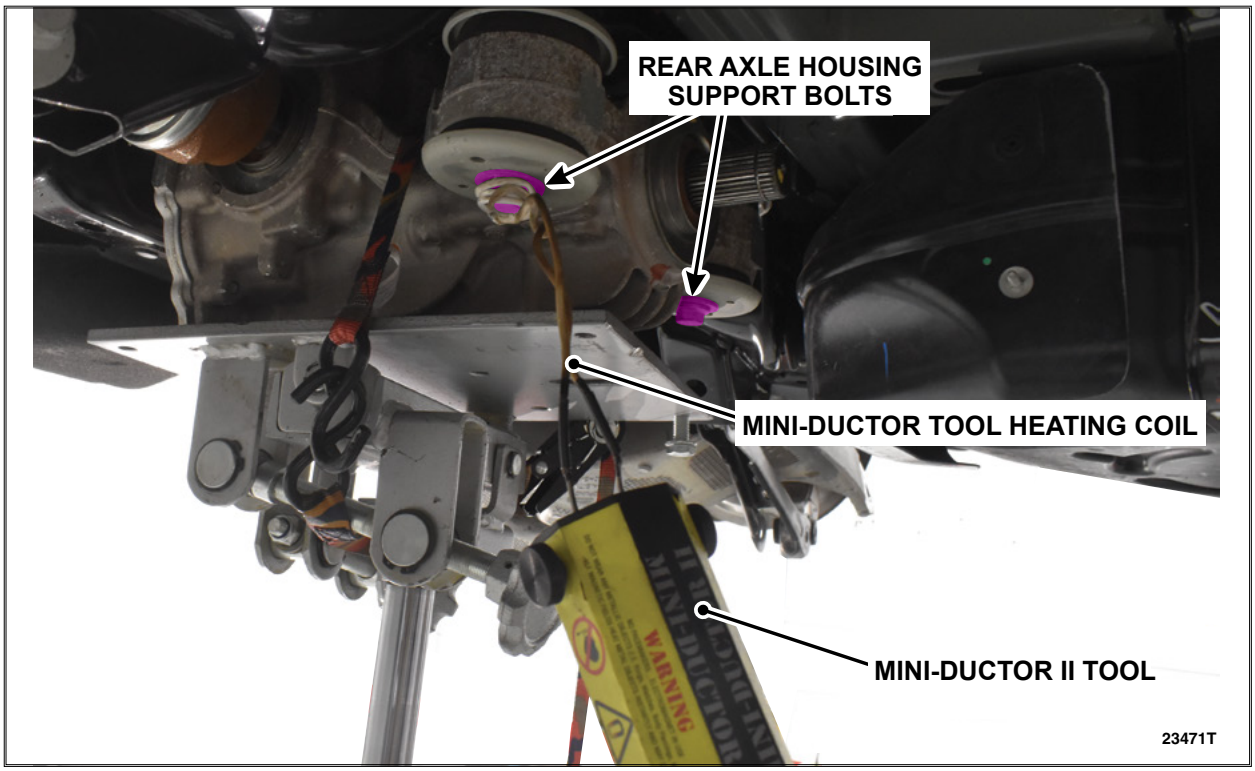

FIGURE 11

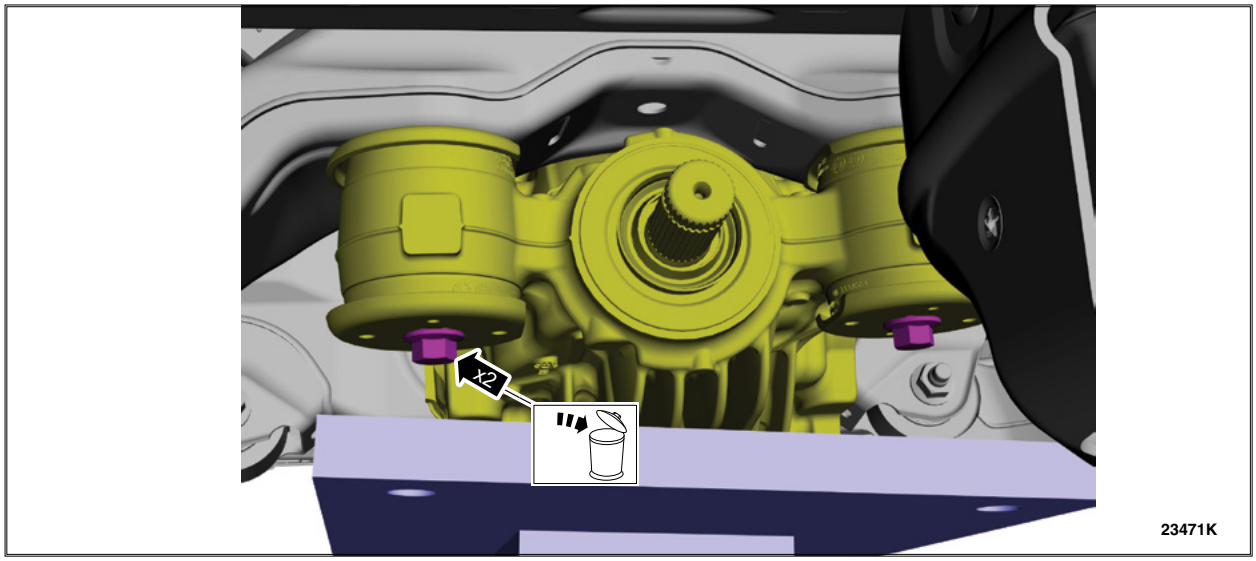

FIGURE 12

CPR © 2024 FORD MOTOR COMPANY
DEARBORN, MICHIGAN 48121
07/2024

20. Remove and discard the rear axle housing support rear bolt. See Figure 13.

- Follow the Torque sequence below:

Stage 1: Torque to: 74 lb.ft (100 Nm).
Stage 2: Tighten an additional: 100° (degrees).

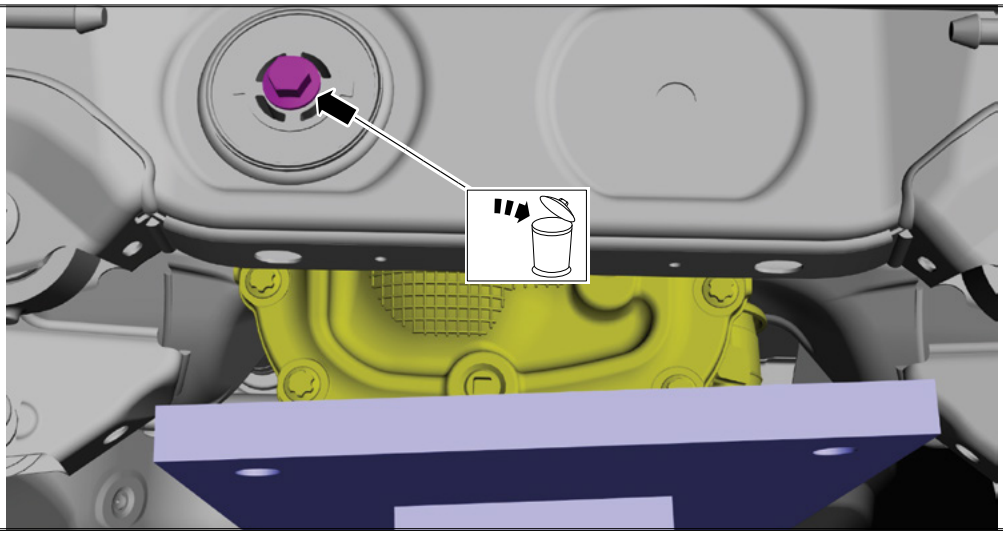

FIGURE 13

21. Gently lower down the transmission jack and remove the rear axle assembly. See Figure 14.
Use the General Equipment: Transmission Jack.

NOTE: Slowly lower the rear axle assembly while positioning it as you are removing the RH halfshaft from the rear axle assembly.

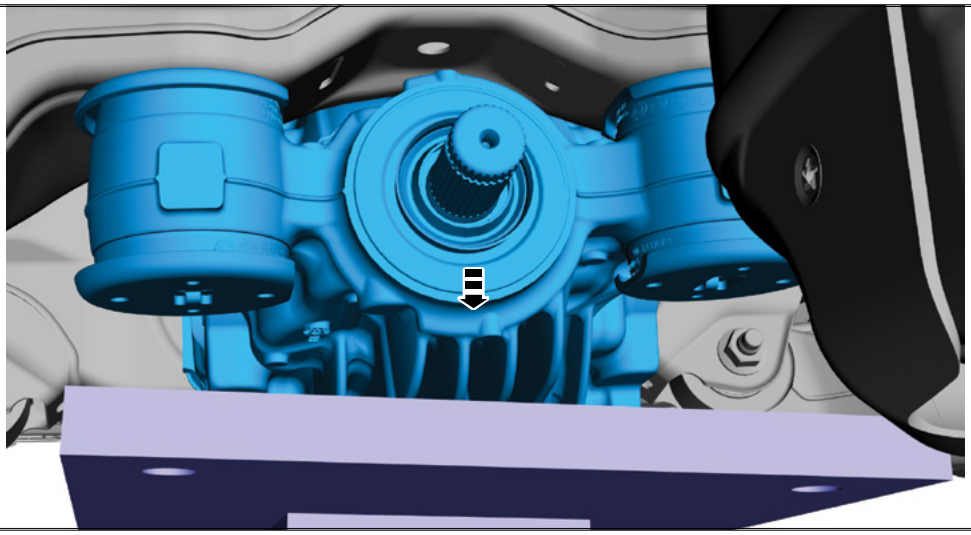

FIGURE 14

CPR © 2024 FORD MOTOR COMPANY
DEARBORN, MICHIGAN 48121
07/2024

22. Install only a *new* differential housing cover (Do Not install the rear axle assembly at this time). Follow the WSM procedures in Section 205-02.

23. Using an 11/16 in. (18 mm) or larger drill bit, drill out the rear axle assembly subframe bushing bolt hole. See Figure 15. Click on the video link to see the drilling process:

NOTE: The use of a corded, high power drill and a good quality/sharp drill bit along with the use of cutting oil will aid in drilling out the rear axle assembly subframe bushing bolt hole.

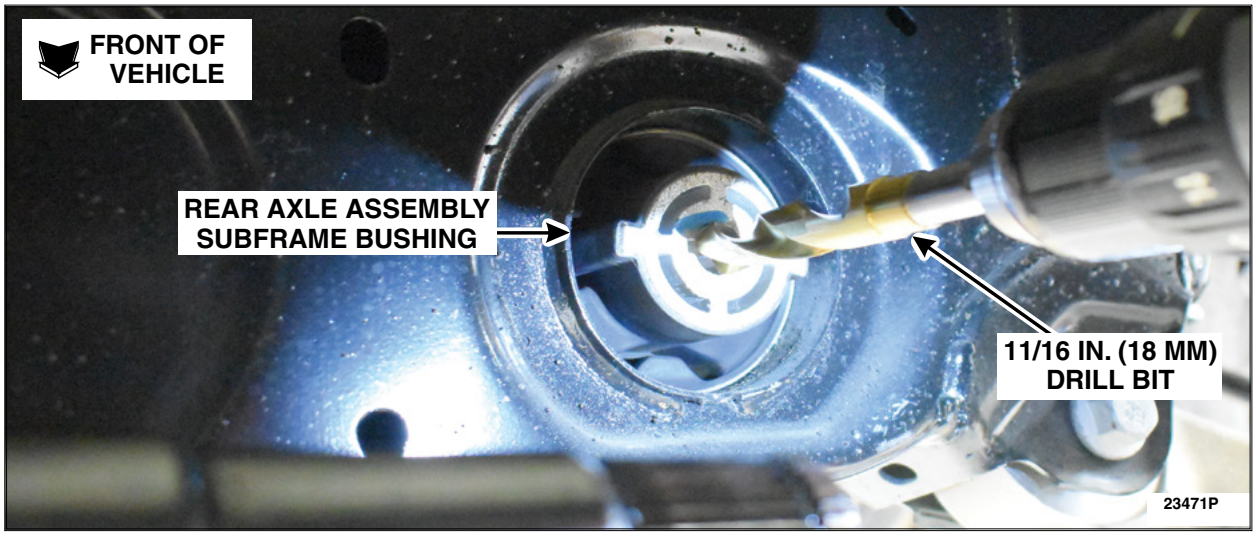

FIGURE 15

NOTE: Refer to the *Essential Special Service Tool (ESST) - Proper Inspection and Usage document*, for recommended lubricant and proper use and orientation of the components within ESST 204-594.

NOTE: It is not recommended to use a smaller threaded rod as it could fail under the forces/load required.

NOTE: The use of longer wrenches will aid in the removal and installation of the rear axle assembly subframe bushing.

CPR © 2024 FORD MOTOR COMPANY
DEARBORN, MICHIGAN 48121
07/2024

24. Using the ESST tools listed below, press out the rear axle assembly subframe bushing. See Figure 16. Click on the video link to see the bushing removal process:

- 204-594 - Forcing Screw
- 204-356/1 - Remover/Installer, Radius Arm Axle Bushing
- 204-356/2 - Remover/Installer, Radius Arm Axle Bushing
- 307-739 - Installer, R3 Bearing
- 205-153 - Adapter, (Handle) for the 303-224 Installer

NOTE: The bearing, 307-739 Installer, R3 Bearing and 204-356/2 Remover/Installer, Radius Arm Axle Bushing go towards the front of the vehicle.

NOTE: The rear axle assembly subframe bushing will be pressed out towards the rear of the vehicle.

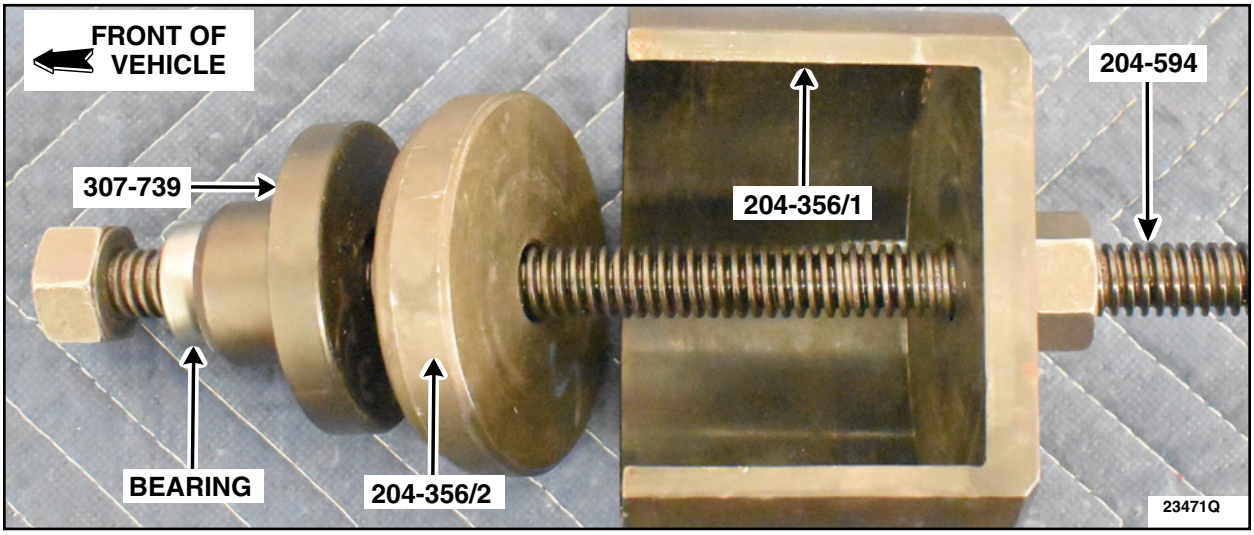

FIGURE 16

CPR © 2024 FORD MOTOR COMPANY
DEARBORN, MICHIGAN 48121
07/2024

NOTE: Make sure the tabs on the *new* rear axle assembly subframe bushing are horizontal with the subframe. See Figure 17.

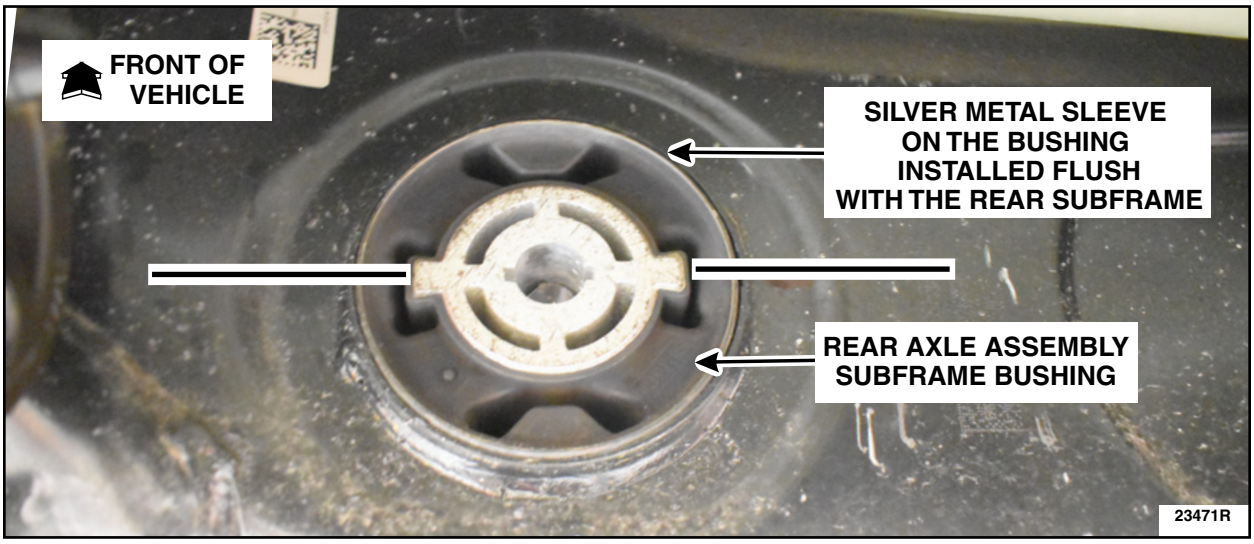

FIGURE 17

25. Using the ESST tools listed below, install the *new* rear axle assembly subframe bushing. See Figures 17 and 18.

- 204-594 - Forcing Screw
- 204-362/3 - Remover/Installer, Front Subframe Bushing
- 307-819 - Cup, Receiver

NOTE: The bearing and 307-819 Cup, Receiver, go towards the front of the vehicle.

NOTE: The *new* rear axle assembly subframe bushing will be pressed in from the rear of the vehicle.

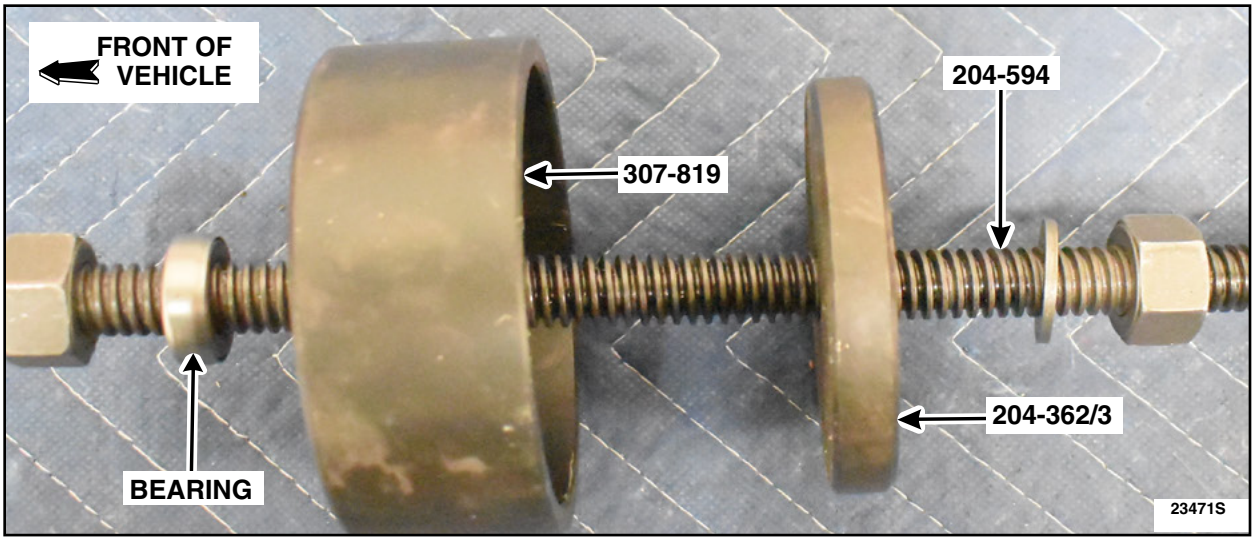

FIGURE 18

CPR © 2024 FORD MOTOR COMPANY
DEARBORN, MICHIGAN 48121
07/2024

26. Replace both rear halfshaft seals. Follow the WSM procedures in Section 205-02.

    - Use ESST 205-153, Handle and 307-758 Installer, Axle Seal.

NOTE: In the next Step, make sure both rear halfshaft circlip openings are located at the bottom or 6 o'clock position to allow for easy installation when directed to install them.

27. Remove and discard both rear inner halfshaft circlips. Then, install *new* circlips onto both rear inner halfshafts. See Figure 19. Then, proceed to the next Step.

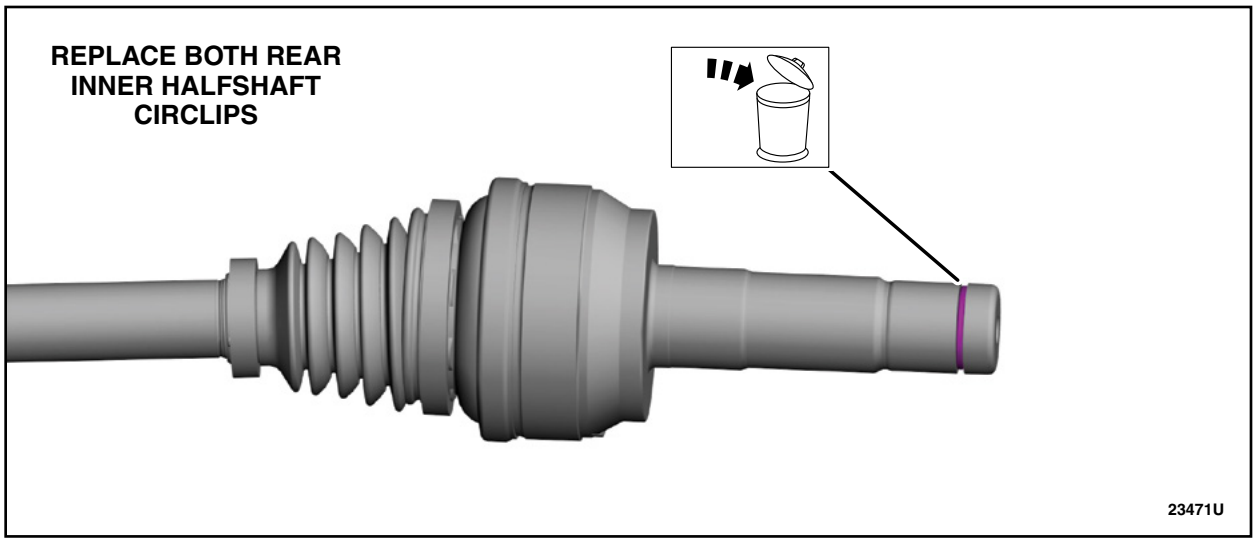

FIGURE 19

28. Reverse the removal steps, outlined in this procedure, to reinstall the rear differential housing assembly.

29. Using a jack stand set the ride height before torquing any suspension bolts.

30. Install the LH rear wheel and tire. Follow the WSM procedures in Section 204-04A.

31. Check and top off the rear differential fluid. Follow the WSM procedures in Section 205-02.

IMPORTANT NOTE: Federal law prohibits selling motor vehicle parts or components that are under safety, compliance, or emissions recall. Unless a part is requested to be returned to Ford, all parts replaced under this FSA must be scrapped in accordance with all applicable local, state and federal environmental protection and hazardous material regulations. Refer to the Parts Retention, Return, & Scrapping section of the FSA dealer bulletin for further information.

CPR © 2024 FORD MOTOR COMPANY
DEARBORN, MICHIGAN 48121
07/2024

PHOTO REQUEST SUBMISSION (SSSC PHOTO SUBMISSION)

Ford has requested photo evidence prior to performing the repair for the FSA.

The SSSC must provide approval prior to performing the repair.

1. Contact the SSSC and upload the necessary photos or copy of documentation(s) as an attachment for review.

    - Submit photos of the broken or missing RDU axle bolt.
    - Include a picture of the VIN plate, a picture of the current vehicle odometer mileage and a picture of the broken or missing rear axle bolt.
    - The SSSC must provide an approval code, prior to performing any repairs.

2. There are two ways to submit the requested items to SSSC.

    a. Directly in the SSSC contact request form while submitting your contact on your desktop.

    b. Via PTS Mobile under the Images/Files Upload menu selection. Select SSSC in the sub-menu and ensure your P&A code is correct. Upload the item(s) by selecting the appropriate FSA with the option to use a prior contact ID. The item(s) will be associated with your SSSC contact during submission.

NOTE: If you have not submitted an SSSC contact yet, then you can still upload the item(s) via PTS mobile, and the item(s) will be available when opening your SSSC contact for this VIN and recall.

3. (If SSSC approval code is required) Upon approval, the SSSC will provide an approval code that must be used for claiming.

CPR © 2024 FORD MOTOR COMPANY
DEARBORN, MICHIGAN 48121
07/2024

Photo Requirement Examples

Acceptable Photos: Clearly shows the area of damage or failure related to this recall.

FIGURE 20

Unacceptable Photos: Is not clear or does not show the area of damage or failure related to this recall.

FIGURE 21

CPR © 2024 FORD MOTOR COMPANY
DEARBORN, MICHIGAN 48121
07/2024

Customer Satisfaction Program 24N01
Certain 2020-2022 Model Year Explorer Vehicles
Rear Axle Bolt Fractures

Mobile Service Repair Assessment

Assessment levels have been identified to help determine the ease of performing eligible mobile service repairs for a Field Service Action (FSA) outside of the dealership service facility.

Dealer Bulletin
Within the Administrative Information Attachment of the dealer bulletin a mobile service repair assessment level(s) will be provided. These assessment levels have been determined using the amount of time, equipment and labor identified to perform the intended service action.

Assessment Levels
- Mobile Reprogramming
- Light Mobile Service
- Enhanced Mobile Service
- Advanced Mobile Service
- Wheel and Tire Mobile Service
- Not a Mobile Service Repair

Description of each level that is used to determine the overall assessment.
– Mobile Reprogramming
- Module Programming or similar type services
- Minimum tools maybe required other than an **IDS/FDRS** setup
- FDRS programming that requires internet connection (wi-fi or mobile hotspot)
- Make sure vehicle has a charge port to ensure battery voltage is maintained during flashing of the module(s)
- Repairs not greater than 1 hour in length (including time to wait for programming)

Note: The location will need a charging station or wall box to maintain the 12-volt battery.

– Light Mobile Service
- Interior repair procedures that do not require seat, dash, or headliner removal
- Under hood repairs that do not require large component removal
- Exterior repairs that do not require large component/panel removal
- Repairs may require standard hand tools (Access to a Technician starter kit or similar)

© Copyright 2024 Ford Motor Company

Customer Satisfaction Program 24N01
Certain 2020-2022 Model Year Explorer Vehicles
Rear Axle Bolt Fractures

🔧🔧🔧 – Enhanced Mobile Service

- ***A two-person process is required anytime a procedure requires work under the vehicle***
- Brake Inspection and Brake Repair/Replacement
- Limited Suspension Component replacement (no alignment)
- Under Vehicle access for limited repairs (no large component removal)
- Vehicle Check Up - VCU
- Pre-Delivery Inspection - PDI
- Used Car Inspection/Presale Inspection
- May require floor jack, jack stands, and impact tools

Note: Wheel lock may be required.

🔧🔧🔧🔧 – Advanced Mobile Service

- Fluid Exchange/Oil Change
- Light Repairs
- Brake Hydraulic Repairs

🛞 – Wheel and Tire Mobile Service

- Tire Removal from Wheel
- Tire Balancing
- Tire Repair

Note: Specialized Mobile Service unit and equipment including Tire balancer and Tire Changer required.

🚫 – Not a Mobile Service Repair

- Large component removal
- BEV Battery Replacement
- Requires a vehicle hoist – to complete the repair (more than inspection)
- Required vehicle alignment
- Requires significant vehicle disassembly
- Repairs greater than 2-3 hours
- Any repairs that require M-Time
- Includes a service procedure where the vehicle owner may be distressed about the state of their vehicle

© Copyright 2024 Ford Motor Company

Customer Satisfaction Program 24N01

Vehicle Pick-Up and Delivery Record

VIN _____ received (check one):

☐ Pick-up and/or delivery service

As outlined below for the 24N01 Field Service Action program.

☐ Pick-up – Date: _____

☐ Delivery – Date: _____

_____ _____
Repair Order # Repair Order Date

_____ _____
Service Manager Signature Date