Macan H2 BEV Launch

Vehicle Type: **Macan (95C)**

Subject: **Macan H2 (95C) BEV Launch Tools**

Information: Porsche Special Tools & Equipment has identified the need for new tools and equipment to support the Macan 95C. This package will be delivered via automatic shipment as Minimum Required Tools (MRT).
Shipments from SBS will start on June 24, 2024.

NOTE: In an effort to provide tools and information as soon as possible, some information in SPTL2410 is listed as TBD or ESTIMATE and will be updated when provided by PAG. This tool package is subject to change as new information becomes available. Some of the tools in this package (marked **#** or ***DELAYED***) are delayed by the manufacture. They will ship out as stock becomes available. **If a delayed tool is needed** for a repair on a customer car open a Special Tools PRMS to request an emergency tool.

3390	**T40466 #**	**T90034**	**VAS5581A #**	**VAS691009A**
T10211	**T40468 #**	**T90035**	**VAS5581A/18 #**	**VAS691017**
T10310 #	**T40469 #**	**T90049 #**	**VAS622021 #**	**VAS691019**
T10337	**T40474/1 #**	**T90051 #**	**VAS6338/3B #**	**VAS6910A #**
T10356A #	**T40476**	**T90052 #**	**VAS652003**	**VAS6910A/28 #**
T10376 #	**T40480 #**	**VAS251613**	**VAS6558A/38A #**	**VAS6931/1**
T40402 #	**T40481 #**	**VAS251613/1**	**VAS6558A/46 #**	**VAS6972 #**
T40424/6 #	**T40482 #**	**VAS251613/2**	**VAS6558A/48 #**	**VAS721025 #**
T40446 #	**T40498**	**VAS251809 #**	**VAS671005 #**	**VAS852027**
T40451 #	**T40499 #**	**VAS251809/2 #**	**VAS6749**	
T40458 #	**T50112/1 #**	**VAS281023 #**	**VAS6910A/27 #**	
T40461 #	**T50112/14**	**VAS501023 #**	**VAS691005/20 #**	
T40462 #	**T50112/15**	**VAS501027 #**	**VAS691005/21 #**	

Questions regarding VAS, VAG, and T tools:
Contact SBS customer care at 1-855-895-2013 or PorscheTEP@SnapOn.com.
Polaris numbers PNA, 000.721, 918.721, and P tools:
Create a PRMS ticket. Technical Support > Special Tools

Macan H2 BEV Launch

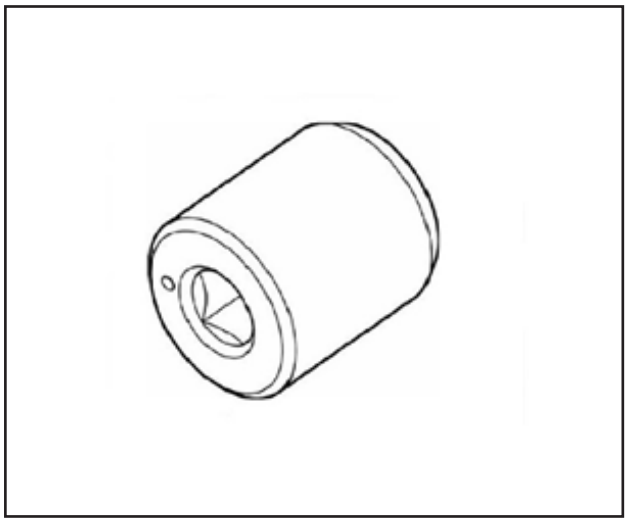

Adapter

3390 | ★★★ | **$ 36.00***

Model lines	Macan (95C)
Use	Gearbox Repair
Workshop Manual	TBD
Order Number	3390
Supplier	Porsche.snapon.com
Availability	Immediate availability - Auto-Ship - Phase 1
Location	Temp Storage in Second PORPAN MRT cabinet Dr 41-50
Note	Workshop Manual ID will be updated when published by PAG

Wrench

T10211 | ★★★ | **$ 38.50***

Model lines	Macan (95C)
Use	Gearbox Repair
Workshop Manual	TBD
Order Number	T10211
Supplier	Porsche.snapon.com
Availability	Immediate availability - Auto-Ship - Phase 1
Location	Temp Storage in Second PORPAN MRT cabinet Dr 41-50
Note	Workshop Manual ID will be updated when published by PAG

Macan H2 BEV Launch

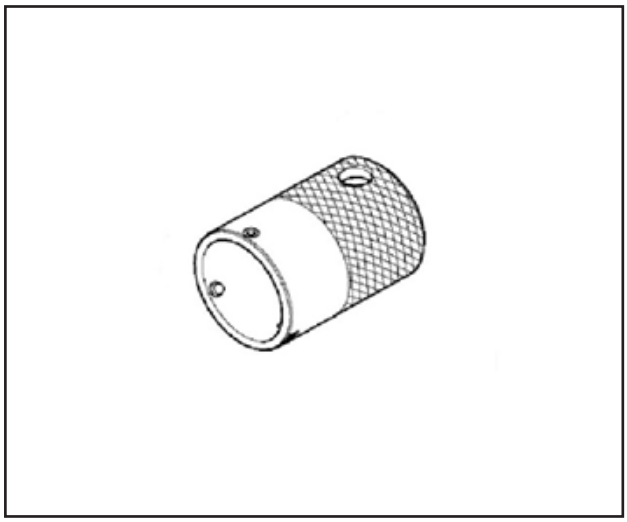

Special Wrench *DELAYED*

T10310 | ★★★ | **$ 39.30***

Model lines	Macan (95C)
Use	Gearbox Repair
Workshop Manual	TBD
Order Number	T10310
Supplier	Porsche.snapon.com
Availability	Delayed - will Auto-Ship when available
Location	Temp Storage in Second PORPAN MRT cabinet Dr 41-50
Note	Workshop Manual ID will be updated when published by PAG

Gearbox Support

T10337 | ★★ | **$ 75.80***

Model lines	Macan (95C)
Use	Support Adapter
Workshop Manual	385819
Order Number	T10337
Supplier	Porsche.snapon.com
Availability	Immediate availability - Auto-Ship - Phase 1
Location	Temp Storage in Second PORPAN MRT cabinet Dr 41-50
Note	Workshop Manual ID will be updated when published by PAG

Macan H2 BEV Launch

Assembly Tool *DELAYED*

T10356A | ★★★ | **$ 324.50***

Model lines	Macan (95C)
Use	Bushing Replacement
Workshop Manual	TBD
Order Number	T10356A
Supplier	Porsche.snapon.com
Availability	Delayed - will Auto-Ship when available
Location	Temp Storage in Second PORPAN MRT cabinet Dr 41-50
Note	Workshop Manual ID will be updated when published by PAG

Pressure Piece *DELAYED*

T10376 | ★★★ | **$ 38.50***

Model lines	Macan (95C)
Use	Gearbox Repair
Workshop Manual	392337
Order Number	T10376
Supplier	Porsche.snapon.com
Availability	Delayed - will Auto-Ship when available
Location	Temp Storage in Second PORPAN MRT cabinet Dr 41-50
Note	Workshop Manual ID will be updated when published by PAG

Macan H2 BEV Launch

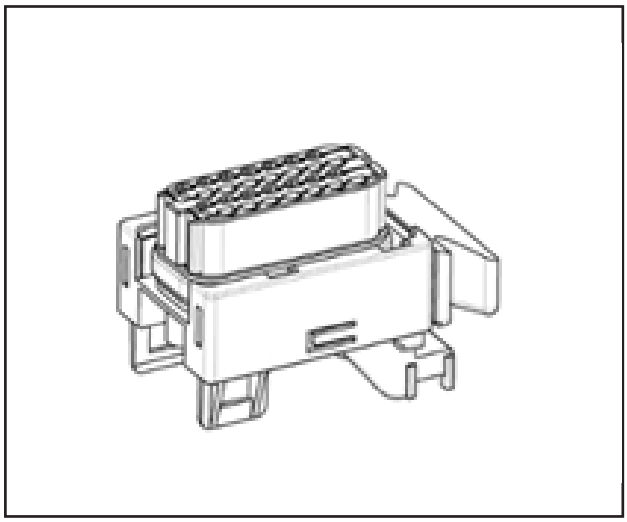

Sealing Plug *DELAYED*

T40402 | ★★ | **$ 76.50***

Model lines	Macan (95C)
Use	Sealing of the 28-pin 12V connector
Workshop Manual	930303
Order Number	T40402
Supplier	Porsche.snapon.com
Availability	Delayed - will Auto-Ship when available
Location	Temp Storage in Second PORPAN MRT cabinet Dr 41-50
Note	Workshop Manual ID will be updated when published by PAG

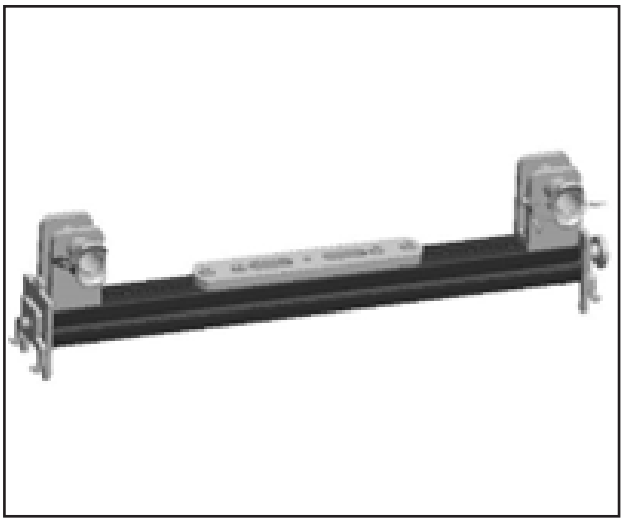

Module Gripper *DELAYED*

T40424/6 | | **$ 427.80***

Model lines	Macan (95C)
Use	Removal and installation of the high-voltage battery module.
Workshop Manual	930119
Order Number	T40424/6
Supplier	Porsche.snapon.com
Availability	Delayed - will Auto-Ship when available
Location	Temp Storage in Second PORPAN MRT cabinet Dr 41-50
Note	Workshop Manual ID will be updated when published by PAG

Macan H2 BEV Launch

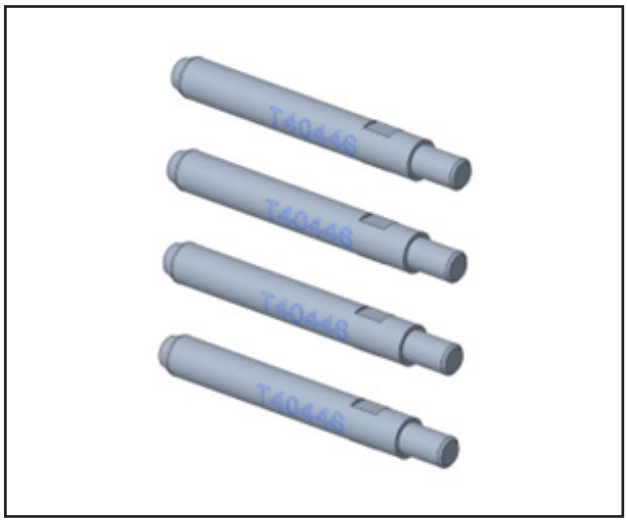

Guide Pins M5 *DELAYED*

T40446 | | **$ 26.60***

Model lines	Macan (95C)
Use	Position the battery cover
Workshop Manual	930219
Order Number	T40446
Supplier	Porsche.snapon.com
Availability	Delayed - will Auto-Ship when available
Location	Temp Storage in Second PORPAN MRT cabinet Dr 41-50
Note	Workshop Manual ID will be updated when published by PAG

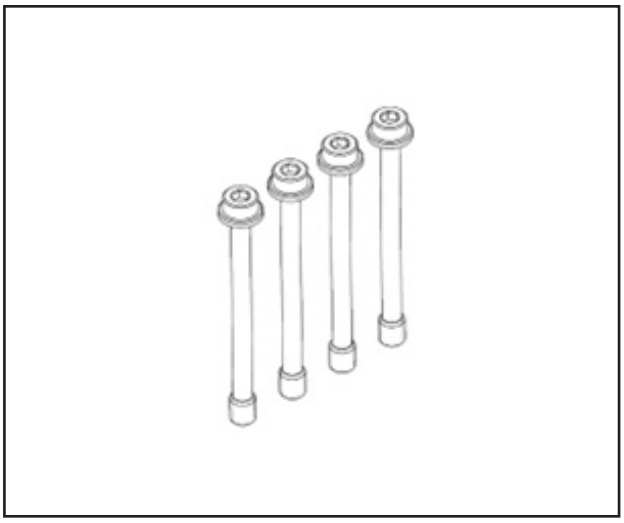

Mounting Tool *DELAYED*

T40451 | | **$ 76.60***

Model lines	Macan (95C)
Use	Pressing the thermal paste
Workshop Manual	930119
Order Number	T40451
Supplier	Porsche.snapon.com
Availability	Delayed - will Auto-Ship when available
Location	Temp Storage in Second PORPAN MRT cabinet Dr 41-50
Note	Workshop Manual ID will be updated when published by PAG

Macan H2 BEV Launch

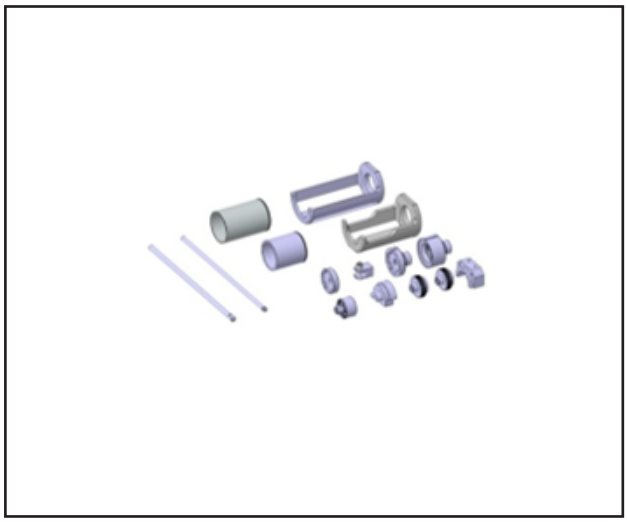

Pressure Piece *DELAYED*

T40458 | ★★ | **$ 861.20***

Model lines	Macan (95C)
Use	Remove and install the mounting of the electric motors
Workshop Manual	TBD
Order Number	T40458
Supplier	Porsche.snapon.com
Availability	Delayed - will Auto-Ship when available
Location	Temp Storage in Second PORPAN MRT cabinet Dr 41-50
Note	Workshop Manual ID will be updated when published by PAG

Assembly Tool *DELAYED*

T40461 | ★★ | **$ 36.90***

Model lines	Macan (95C)
Use	Locating pin for assembly
Workshop Manual	TBD
Order Number	T40461
Supplier	Porsche.snapon.com
Availability	Delayed - will Auto-Ship when available
Location	Temp Storage in Second PORPAN MRT cabinet Dr 41-50
Note	Workshop Manual ID will be updated when published by PAG

Macan H2 BEV Launch

Template *DELAYED*

T40462 | | **$ 164.80***

Model lines	Macan (95C)
Use	Template for applying the thermal paste
Workshop Manual	930119
Order Number	T40462
Supplier	Porsche.snapon.com
Availability	Delayed - will Auto-Ship when available
Location	Temp Storage in Second PORPAN MRT cabinet Dr 41-50
Note	Workshop Manual ID will be updated when published by PAG

Support Device *DELAYED*

T40466 | ★★ | **$ 17.10***

Model lines	Macan (95C)
Use	Placing the front end into service position
Workshop Manual	TBD
Order Number	T40466
Supplier	Porsche.snapon.com
Availability	Delayed - will Auto-Ship when available
Location	Temp Storage in Second PORPAN MRT cabinet Dr 41-50
Note	Workshop Manual ID will be updated when published by PAG

Macan H2 BEV Launch

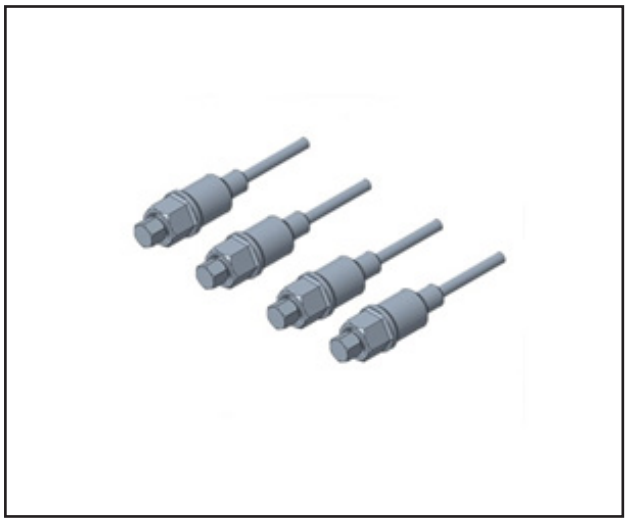

Disassembly Tool *DELAYED*

T40468 | ★★ | **$ 53.90***

Model lines	Macan (95C)
Use	Disassembly of covers on the gearbox
Workshop Manual	TBD
Order Number	T40468
Supplier	Porsche.snapon.com
Availability	Delayed - will Auto-Ship when available
Location	Temp Storage in Second PORPAN MRT cabinet Dr 41-50
Note	Workshop Manual ID will be updated when published by PAG

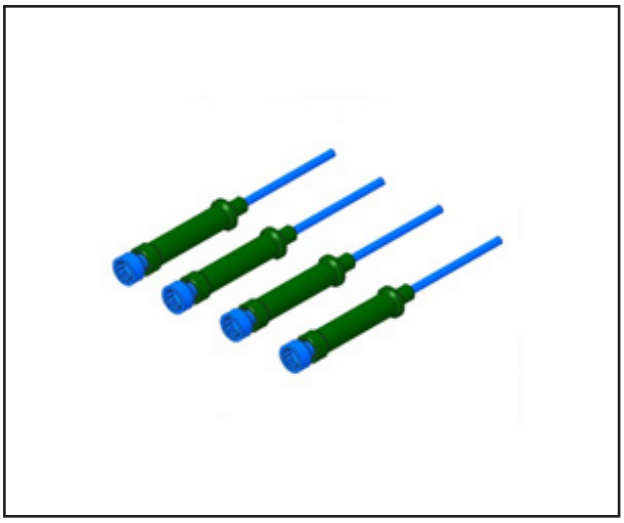

Disassembly Tool *DELAYED*

T40469 | ★★ | **$ 61.20***

Model lines	Macan (95C)
Use	Disassembly of covers on the gearbox
Workshop Manual	TBD
Order Number	T40469
Supplier	Porsche.snapon.com
Availability	Delayed - will Auto-Ship when available
Location	Temp Storage in Second PORPAN MRT cabinet Dr 41-50
Note	Workshop Manual ID will be updated when published by PAG

Macan H2 BEV Launch

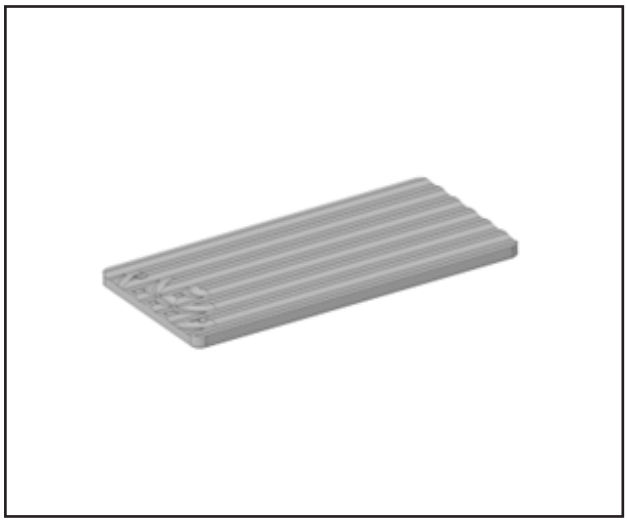

Plate *DELAYED*

T40474/1 | | **$ 162.90***

Model lines	Macan (95C)
Use	Counter holder when mounting HV battery modules
Workshop Manual	930119
Order Number	T40474/1
Supplier	Porsche.snapon.com
Availability	Delayed - will Auto-Ship when available
Location	Temp Storage in Second PORPAN MRT cabinet Dr 41-50
Note	Workshop Manual ID will be updated when published by PAG

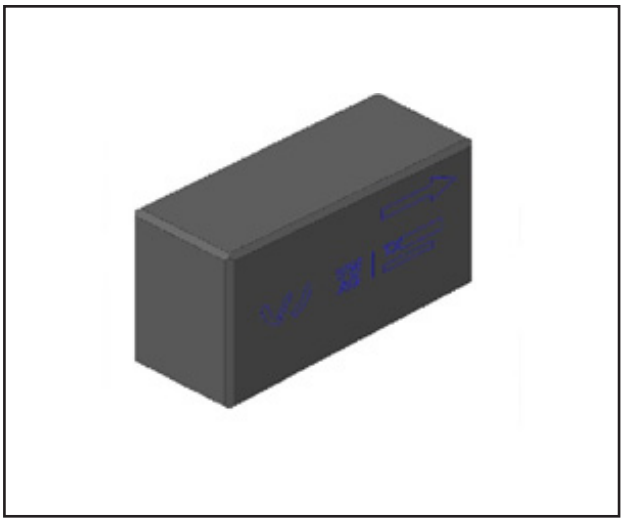

Wedge

T40476 | ★★★ | **$ 20.80***

Model lines	Macan (95C)
Use	Fix front end in service position
Workshop Manual	TBD
Order Number	T40476
Supplier	Porsche.snapon.com
Availability	Immediate availability - Auto-Ship - Phase 1
Location	Temp Storage in Second PORPAN MRT cabinet Dr 41-50
Note	Workshop Manual ID will be updated when published by PAG

Macan H2 BEV Launch

Socket Set - FDS screw

VAS852027 | ★★★ | **$ 119.30***

Model lines	Macan (95C)
Use	Loosen FDS connections.
Workshop Manual	509555
Order Number	VAS852027
Supplier	Porsche.snapon.com
Availability	Immediate availability - Auto-Ship - Phase 1
Location	Temp Storage in Second PORPAN MRT cabinet Dr 41-50
Note	Workshop Manual ID will be updated when published by PAG

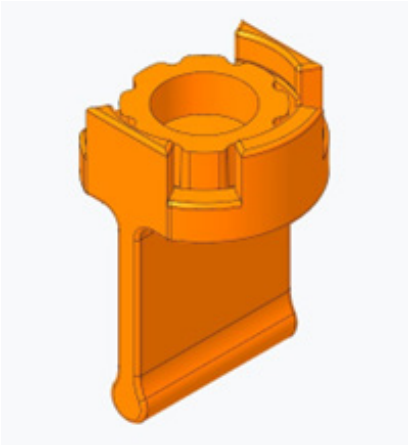

Cap *DELAYED*

T40480 | | **$ 75.70***

Model lines	Macan (95C)
Use	Cover for HV contacts
Workshop Manual	930119
Order Number	T40480
Supplier	Porsche.snapon.com
Availability	Delayed - will Auto-Ship when available
Location	Temp Storage in Second PORPAN MRT cabinet Dr 41-50
Note	Workshop Manual ID will be updated when published by PAG One bag is 30 Pieces

Macan H2 BEV Launch

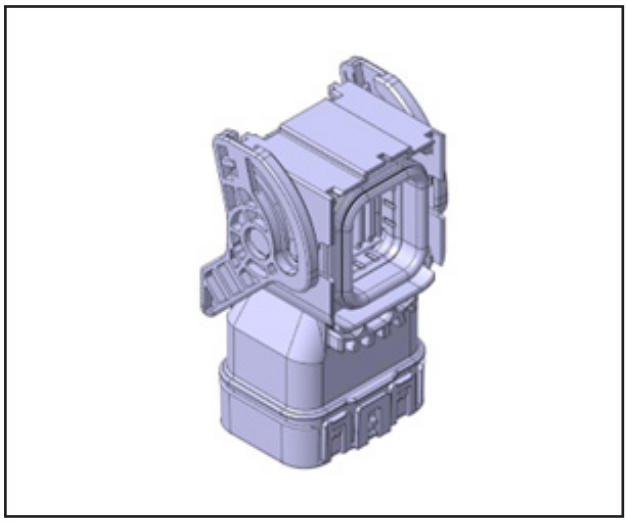

Sealing Plug HVR 270 *DELAYED* (X2)

T40481 | ★★ | **$ 62.80* EACH**

Model lines	Macan (95C)
Use	Sealing plug for housing leak test of the HV battery
Workshop Manual	930303
Order Number	T40481
Supplier	Porsche.snapon.com
Availability	Delayed - will Auto-Ship when available
Location	Temp Storage in Second PORPAN MRT cabinet Dr 41-50
Note	Workshop Manual ID will be updated when published by PAG

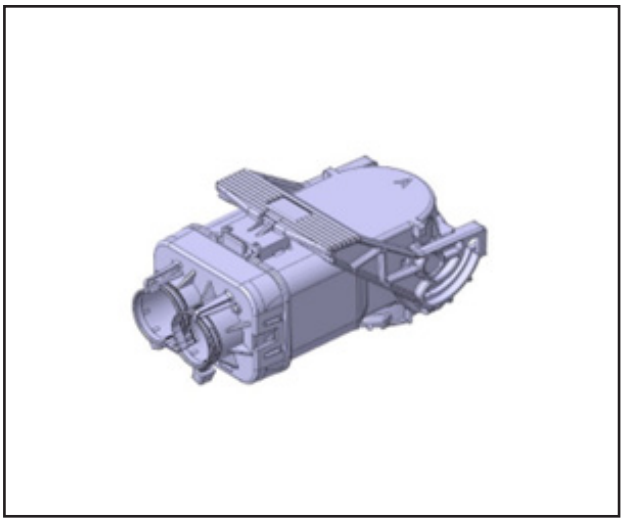

Sealing Plug HVR 300 *DELAYED*

T40482 | ★★ | **$ 71.40***

Model lines	Macan (95C)
Use	Sealing plug for housing leak test of the HV battery
Workshop Manual	930303
Order Number	T40482
Supplier	Porsche.snapon.com
Availability	Delayed - will Auto-Ship when available
Location	Temp Storage in Second PORPAN MRT cabinet Dr 41-50
Note	Workshop Manual ID will be updated when published by PAG

Macan H2 BEV Launch

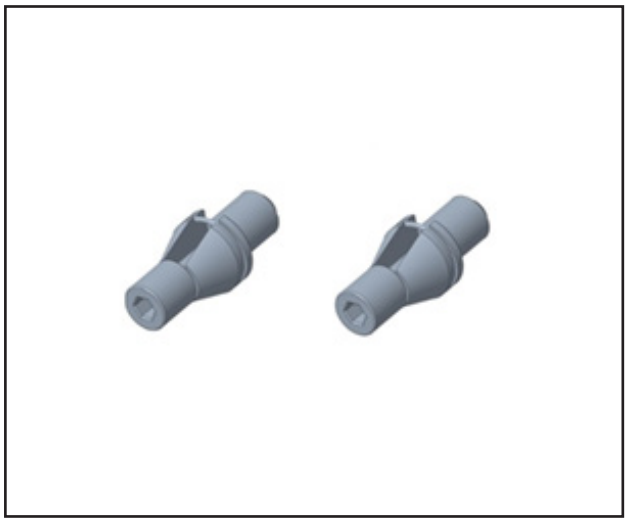

Locating Pins

T40498 | ★★ | **$ 22.60***

Model lines	Macan (95C)
Use	Positioning the front axle
Workshop Manual	TBD
Order Number	T40498
Supplier	Porsche.snapon.com
Availability	Immediate availability - Auto-Ship - Phase 1
Location	Temp Storage in Second PORPAN MRT cabinet Dr 41-50
Note	Workshop Manual ID will be updated when published by PAG

Holder *DELAYED*

T40499 | ★★ | **$ 28.20***

Model lines	Macan (95C)
Use	Hold IBRS
Workshop Manual	TBD
Order Number	T40499
Supplier	Porsche.snapon.com
Availability	Delayed - will Auto-Ship when available
Location	Temp Storage in Second PORPAN MRT cabinet Dr 41-50
Note	Workshop Manual ID will be updated when published by PAG

Macan H2 BEV Launch

Handle *DELAYED*

T50112/1 | ★★★ | **$ 35.80***

Model lines	Macan (95C)
Use	Handle for various pressure pieces
Workshop Manual	TBD
Order Number	T50112/1
Supplier	Porsche.snapon.com
Availability	Delayed - will Auto-Ship when available
Location	Temp Storage in Second PORPAN MRT cabinet Dr 41-50
Note	Workshop Manual ID will be updated when published by PAG

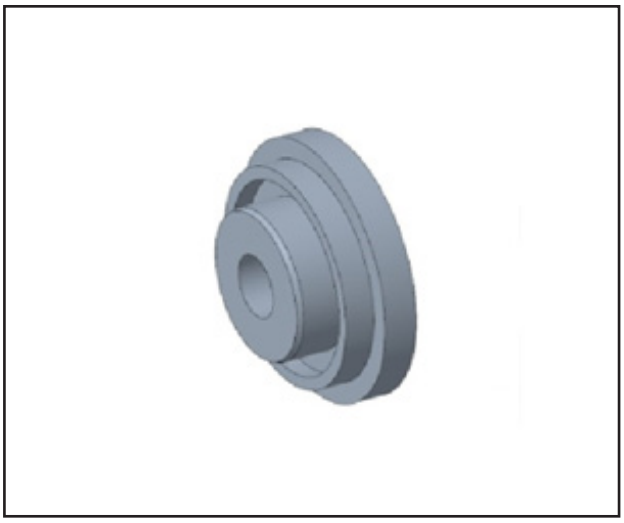

Pressure Piece

T50112/14 | ★★★ | **$ 17.50***

Model lines	Macan (95C)
Use	Replacing the gearbox bearings
Workshop Manual	TBD
Order Number	T50112/14
Supplier	Porsche.snapon.com
Availability	Immediate availability - Auto-Ship - Phase 1
Location	Temp Storage in Second PORPAN MRT cabinet Dr 41-50
Note	Workshop Manual ID will be updated when published by PAG

Macan H2 BEV Launch

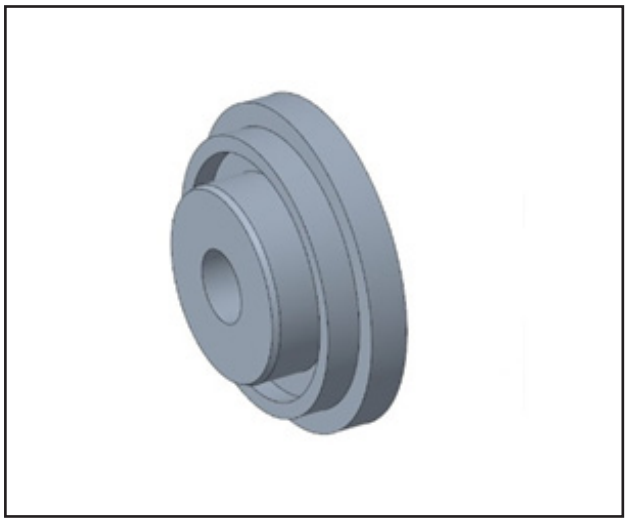

Pressure Piece

T50112/15 | ★★★ | **$ 17.50***

Model lines	Macan (95C)
Use	Replace the gearbox bearings
Workshop Manual	TBD
Order Number	T50112/15
Supplier	Porsche.snapon.com
Availability	Immediate availability - Auto-Ship - Phase 1
Location	Temp Storage in Second PORPAN MRT cabinet Dr 41-50
Note	Workshop Manual ID will be updated when published by PAG

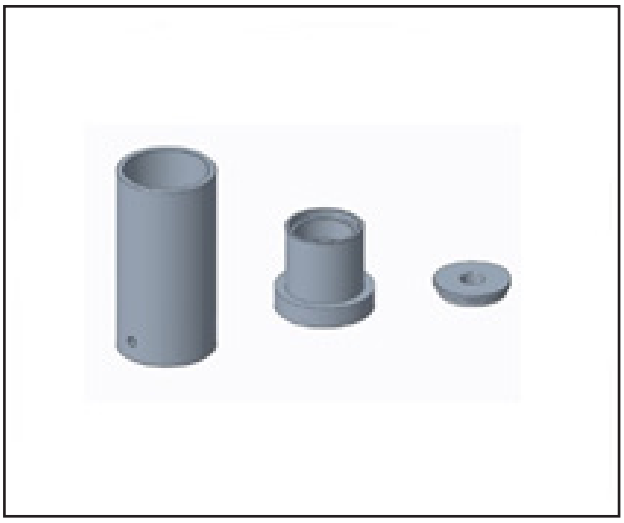

Assembly Tool

T90034 | ★★★ | **$ 83.60***

Model lines	Macan (95C)
Use	Replacing bearings
Workshop Manual	TBD
Order Number	T90034
Supplier	Porsche.snapon.com
Availability	Immediate availability - Auto-Ship - Phase 1
Location	Temp Storage in Second PORPAN MRT cabinet Dr 41-50
Note	Workshop Manual ID will be updated when published by PAG

Macan H2 BEV Launch

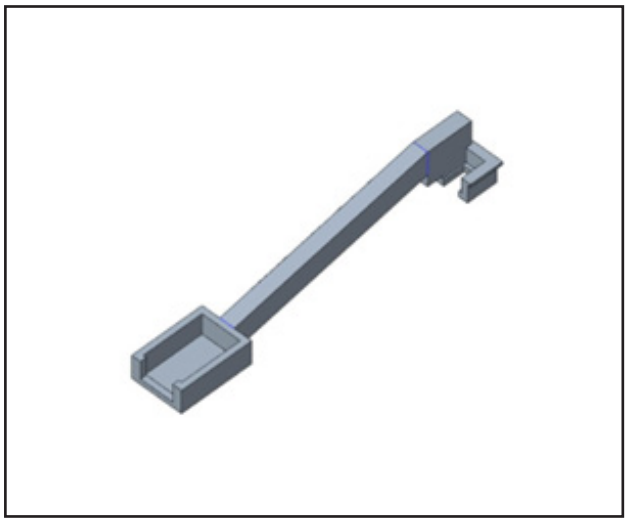

Unlock Tool

T90035 | | **$ 23.60***

Model lines	Macan (95C)
Use	Disconnecting the connector of high-voltage battery
Workshop Manual	932019
Order Number	T90035
Supplier	Porsche.snapon.com
Availability	Immediate availability - Auto-Ship - Phase 1
Location	Temp Storage in Second PORPAN MRT cabinet Dr 41-50
Note	Workshop Manual ID will be updated when published by PAG

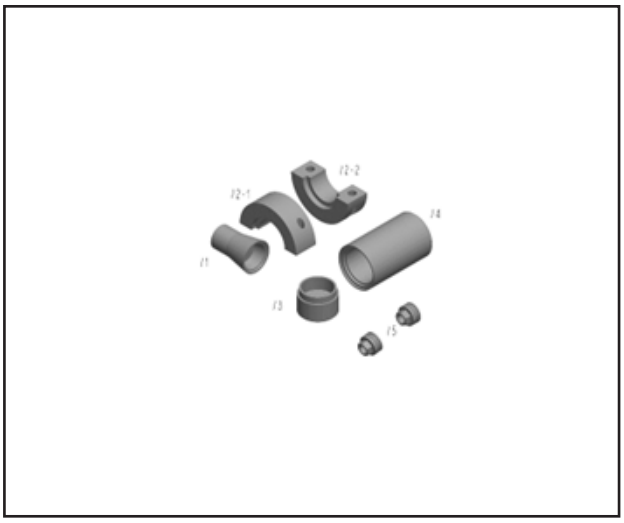

Mounting Fixture *DELAYED*

T90049 | ★★★ | **$ 138.70 * -ESTIMATE ONLY- Actual TBD**

Model lines	Macan (95C)
Use	Disassemble and mount the suspension arm bearing
Workshop Manual	TBD
Order Number	T90049
Supplier	Porsche.snapon.com
Availability	Delayed - will Auto-Ship when available
Location	Temp Storage in Second PORPAN MRT cabinet Dr 41-50
Note	Workshop Manual ID will be updated when published by PAG

Macan H2 BEV Launch

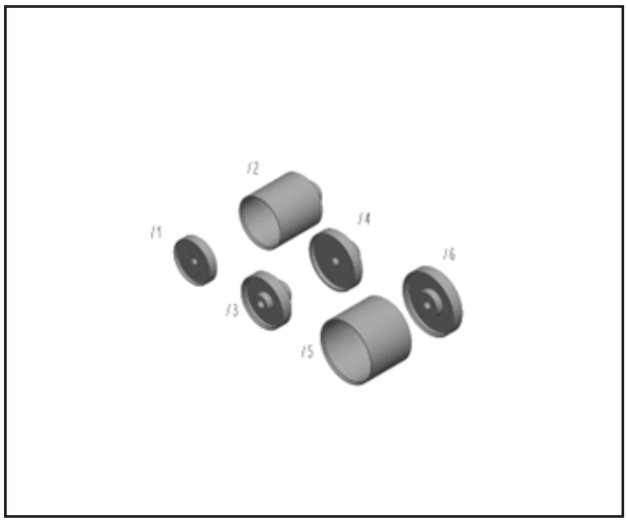

Mounting Fixture *DELAYED*

T90051 | ★★ | **$ 355.00* -ESTIMATE ONLY- Actual TBD**

Model lines	Macan (95C)
Use	TBD
Workshop Manual	TBD
Order Number	T90051
Supplier	Porsche.snapon.com
Availability	Delayed - will Auto-Ship when available
Location	Temp Storage in Second PORPAN MRT cabinet Dr 41-50
Note	Workshop Manual ID will be updated when published by PAG

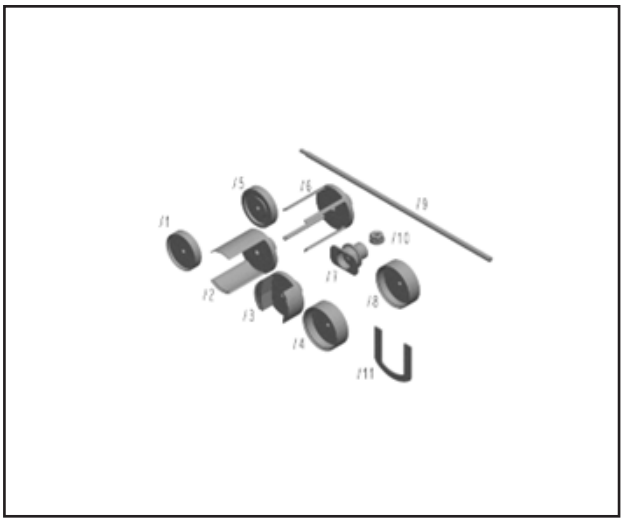

Mounting Fixture *DELAYED*

T90052 | ★★★ | **$ 683.60***

Model lines	Macan (95C)
Use	Replace subframe bearing
Workshop Manual	TBD
Order Number	T90052
Supplier	Porsche.snapon.com
Availability	Delayed - will Auto-Ship when available
Location	Temp Storage in Second PORPAN MRT cabinet Dr 41-50
Note	Workshop Manual ID will be updated when published by PAG

Macan H2 BEV Launch

Adapter

VAS251613/1 | ★★★ | **$ 15.50***

Model lines	Macan (95C)
Use	Dismantling the RWDR & Grounding Ring E-Machine
Workshop Manual	TBD
Order Number	VAS251613/1
Supplier	Porsche.snapon.com
Availability	Immediate availability - Auto-Ship - Phase 1
Location	Temp Storage in Second PORPAN MRT cabinet Dr 41-50
Note	Workshop Manual ID will be updated when published by PAG

Adapter

VAS251613/2 | ★★★ | **$ 19.40***

Model lines	Macan (95C)
Use	Mounting and disassembling the ground ring
Workshop Manual	TBD
Order Number	VAS251613/2
Supplier	Porsche.snapon.com
Availability	Immediate availability - Auto-Ship - Phase 1
Location	Temp Storage in Second PORPAN MRT cabinet Dr 41-50
Note	Workshop Manual ID will be updated when published by PAG

Macan H2 BEV Launch

Ball Joint Splitter *DELAYED*

VAS251809 | ★★ | **$ 226.80***

Model lines	Macan (95C)
Use	removal of guide link
Workshop Manual	TBD
Order Number	VAS251809
Supplier	Porsche.snapon.com
Availability	Delayed - will Auto-Ship when available
Location	Temp Storage in Second PORPAN MRT cabinet Dr 41-50
Note	Workshop Manual ID will be updated when published by PAG

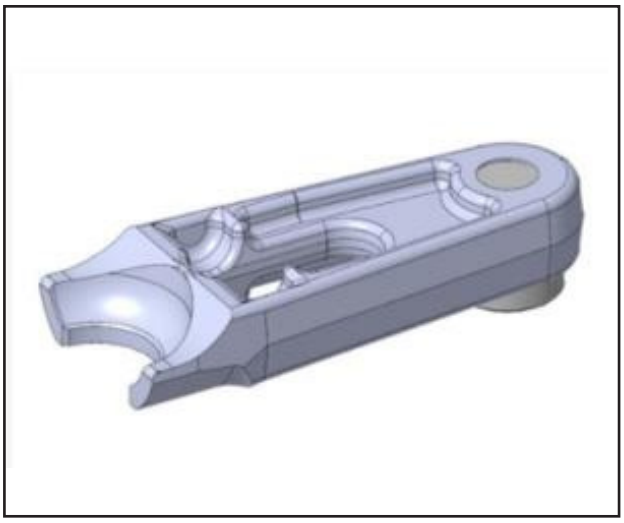

Ball Joint Splitter Adapter *DELAYED*

VAS251809/2 | ★★ | **$195.10***

Model lines	Macan (95C)
Use	Pull off tie rod
Workshop Manual	TBD
Order Number	VAS251809/2
Supplier	Porsche.snapon.com
Availability	Delayed - will Auto-Ship when available
Location	Temp Storage in Second PORPAN MRT cabinet Dr 41-50
Note	Workshop Manual ID will be updated when published by PAG

Macan H2 BEV Launch

Step Drill Bit *DELAYED*

VAS281023 | ★★★ | **$ 40.20***

Model lines	Macan (95C)
Use	For drilling/removing a round-turned FDS screw
Workshop Manual	TBD
Order Number	VAS281023
Supplier	Porsche.snapon.com
Availability	Delayed - will Auto-Ship when available
Location	Temp Storage in Second PORPAN MRT cabinet Dr 41-50
Note	Workshop Manual ID will be updated when published by PAG

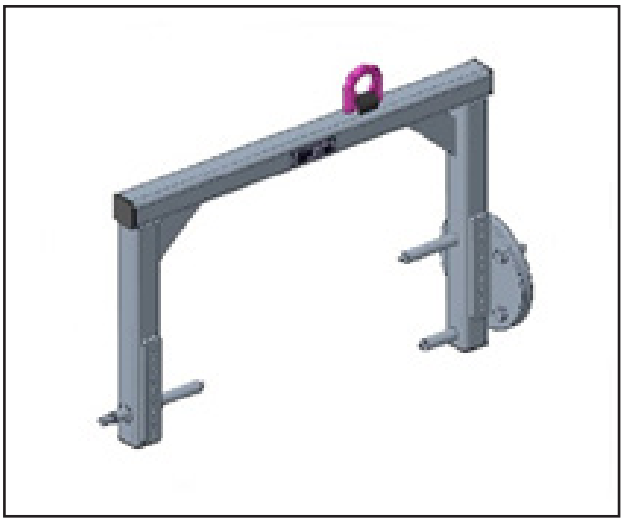

Lifting Device *DELAYED*

VAS501023 | ★★ | **$ 897.50***

Model lines	Macan (95C)
Use	Mounting bracket for the drive motor
Workshop Manual	934913
Order Number	VAS501023
Supplier	Porsche.snapon.com
Availability	Delayed - will Auto-Ship when available
Location	In-Shop
Note	Workshop Manual ID will be updated when published by PAG

Macan H2 BEV Launch

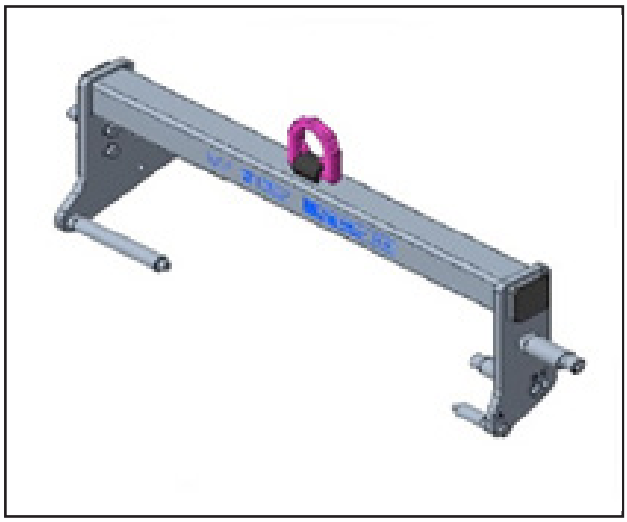

Lifting Device *DELAYED*

VAS501027 | ★★ | **$ 807.70***

Model lines	Macan (95C)
Use	Lifting the drive assembly
Workshop Manual	TBD
Order Number	VAS501027
Supplier	Porsche.snapon.com
Availability	Delayed - will Auto-Ship when available
Location	Temp Storage in Second PORPAN MRT cabinet Dr 41-50
Note	Workshop Manual ID will be updated when published by PAG

Communication Device *DELAYED*

VAS5581A | | **$ 1,609.70***

Model lines	Macan (95C)
Use	Communicate with HV battery
Workshop Manual	TBD
Order Number	VAS5581A
Supplier	Porsche.snapon.com
Availability	Delayed - will Auto-Ship when available
Location	In shop / Replace VAS5581 in Orange HV Toolbox cabinet
Note	Diagnosis and classification of removed high-voltage lithium-ion batteries. The VAS 5581A supports the communication protocols CAN, ISO CAN-FD and LIN, which are necessary for the Macan H2 vehicle model as well as for future vehicle models. The device is also backwards compatible.

Macan H2 BEV Launch

Cable *DELAYED*

VAS5581A/18 | | **$ 250.40***

Model lines	Macan (95C)
Use	Communicate with HV battery
Workshop Manual	9303IN
Order Number	VAS5581A/18
Supplier	Porsche.snapon.com
Availability	Delayed - will Auto-Ship when available
Location	In-Shop With VAS5581A
Note	Workshop Manual ID will be updated when published by PAG

Power Cable for VAS6910A *DELAYED*

VAS622021 | | **$ 360.00***

Model lines	Macan (95C)
Use	Supply Power to VAS6910A
Workshop Manual	TBD
Order Number	VAS622021
Supplier	Porsche.snapon.com
Availability	Delayed - will Auto-Ship when available
Location	In-Shop With VAS6910A
Note	Workshop Manual ID will be updated when published by PAG

Macan H2 BEV Launch

AC Flushing Adapter *DELAYED*

VAS6338/3B | ★★ | **$ 121.20***

Model lines	Macan (95C)
Use	Flush AC refrigerant system
Workshop Manual	870129
Order Number	VAS6338/3B
Supplier	Porsche.snapon.com
Availability	Delayed - will Auto-Ship when available
Location	Temp Storage in Second PORPAN MRT cabinet Dr 41-50
Note	Workshop Manual ID will be updated when published by PAG

Adapter

VAS652003 | ★★ | **$ 81.00***

Model lines	Macan (95C)
Use	For diagnosis on H-MTD double plugs
Workshop Manual	TBD
Order Number	VAS652003
Supplier	Porsche.snapon.com
Availability	Delayed - will Auto-Ship when available
Location	Immediate availability - Auto-Ship - Phase 1
Note	Workshop Manual ID will be updated when published by PAG

Macan H2 BEV Launch

HV Test Fixtures *DELAYED*

VAS6558A/38A | ★★ | **$ 1,174.80***

Model lines	Macan (95C)
Use	Determining the absence of voltage
Workshop Manual	TBD
Order Number	VAS6558A/38A
Supplier	Porsche.snapon.com
Availability	Delayed - will Auto-Ship when available
Location	Temp Storage in Second PORPAN MRT cabinet Dr 41-50
Note	Workshop Manual ID will be updated when published by PAG

Adaptor *DELAYED*

VAS6558A/46 | ★★ | **$ 502.40***

Model lines	Macan (95C)
Use	Determining the absence of voltage
Workshop Manual	932519
Order Number	VAS6558A/46
Supplier	Porsche.snapon.com
Availability	Delayed - will Auto-Ship when available
Location	Temp Storage in Second PORPAN MRT cabinet Dr 41-50
Note	Workshop Manual ID will be updated when published by PAG

Macan H2 BEV Launch

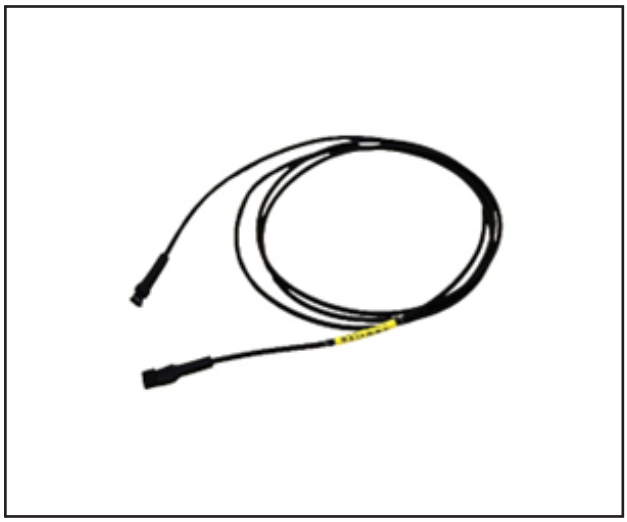

Adapter *DELAYED*

VAS6558A/48 | | **$ 34.30***

Model lines	Macan (95C)
Use	Extension cable LV line to BMCe, for connection to LV
Workshop Manual	930303
Order Number	VAS6558A/48
Supplier	Porsche.snapon.com
Availability	Delayed - will Auto-Ship when available
Location	Temp Storage in Second PORPAN MRT cabinet Dr 41-50
Note	Workshop Manual ID will be updated when published by PAG

Pressure and Vacuum Pump *DELAYED*

VAS671005 | ★★ | **$ 359.10***

Model lines	Macan (95C)
Use	Leak test HVB with test pressure -50mBar
Workshop Manual	930303
Order Number	VAS671005
Supplier	Porsche.snapon.com
Availability	Delayed - will Auto-Ship when available
Location	Temp Storage in Second PORPAN MRT cabinet Dr 41-50
Note	Workshop Manual ID will be updated when published by PAG

Macan H2 BEV Launch

Hand Pressure Caulking Gun

VAS6749 | | **$ 38.80***

Model lines	Macan (95C)
Use	Application of Krytox for mounting the BMCe
Workshop Manual	TBD
Order Number	VAS6749
Supplier	Porsche.snapon.com
Availability	Delayed - will Auto-Ship when available
Location	Temp Storage in Second PORPAN MRT cabinet Dr 41-50
Note	Workshop Manual ID will be updated when published by PAG

Cable Set *DELAYED*

VAS6910A/27 | ★★★ | **$ 336.60***

Model lines	Macan (95C)
Use	Connecting VAS6910A to Module
Workshop Manual	TBD
Order Number	VAS6910A/27
Supplier	Porsche.snapon.com
Availability	Delayed - will Auto-Ship when available
Location	Temp Storage in Second PORPAN MRT cabinet Dr 41-50
Note	Workshop Manual ID will be updated when published by PAG

Macan H2 BEV Launch

Supplementary Set Leak Test Set *DELAYED*

VAS691005/20 | ★★ | **$ 217.30***

Model lines	Macan (95C)
Use	Testing of the cooling system of high-voltage batteries.
Workshop Manual	930319
Order Number	VAS691005/20
Supplier	Porsche.snapon.com
Availability	Delayed - will Auto-Ship when available
Location	Temp Storage in Second PORPAN MRT cabinet Dr 41-50
Note	Workshop Manual ID will be updated when published by PAG

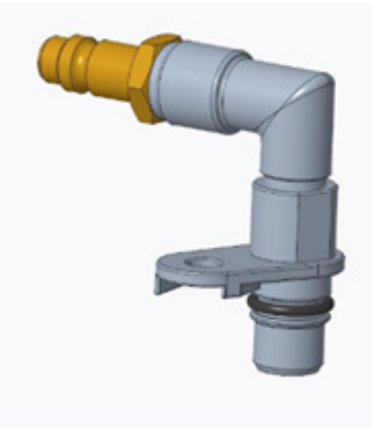

Adapter *DELAYED*

VAS691005/21 | ★★ | **$ 59.20***

Model lines	Macan (95C)
Use	Adapter for leak testing of the high-voltage battery
Workshop Manual	930303
Order Number	VAS691005/21
Supplier	Porsche.snapon.com
Availability	Delayed - will Auto-Ship when available
Location	Temp Storage in Second PORPAN MRT cabinet Dr 41-50
Note	Workshop Manual ID will be updated when published by PAG

Macan H2 BEV Launch

Shackle (VAS691009US)

VAS691009A | ★★ | **$ 17.60***

Model lines	Macan (95C)
Use	Handling BMCe
Workshop Manual	932019
Order Number	VAS691009US
Supplier	Porsche.snapon.com
Availability	Immediate availability - Auto-Ship - Phase 1
Location	Temp Storage in Second PORPAN MRT cabinet Dr 41-50
Note	Workshop Manual ID will be updated when published by PAG

Swivel (X4)

VAS691017 | ★★ | **$ 100.20* EACH**

Model lines	Macan (95C)
Use	Lifting the high-voltage battery
Workshop Manual	930319
Order Number	VAS691017
Supplier	Porsche.snapon.com
Availability	Immediate availability - Auto-Ship - Phase 1
Location	Temp Storage in Second PORPAN MRT cabinet Dr 41-50
Note	Workshop Manual ID will be updated when published by PAG

Macan H2 BEV Launch

Insulating Mat

VAS691019 | | **$ 336.3.0***

Model lines	Macan (95C)
Use	Protect against contact with live vehicle components
Workshop Manual	932019
Order Number	VAS691019
Supplier	Porsche.snapon.com
Availability	Delayed - will Auto-Ship when available
Location	In-Shop
Note	Workshop Manual ID will be updated when published by PAG

Module Balancer (Gen 2) *DELAYED*

VAS6910A | ★★★ | **$ 12,082.40 ***

Model lines	Macan (95C)
Use	Cell Module Charging and Discharging
Workshop Manual	TBD
Order Number	VAS6910A
Supplier	Porsche.snapon.com
Availability	Delayed - will Auto-Ship when available
Location	Temp Storage in Second PORPAN MRT cabinet Dr 41-50
Note	Workshop Manual ID will be updated when published by PAG

Macan H2 BEV Launch

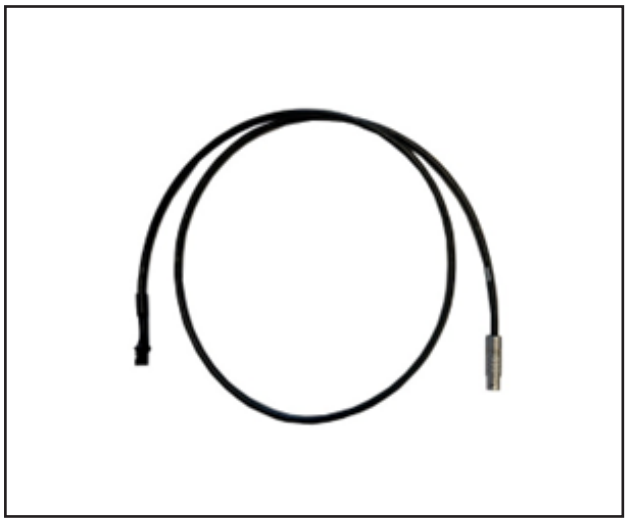

Connection Line *DELAYED*

VAS6910A/28 | | **$ 215.40**

Model lines	Macan (95C)
Use	Connecting VAS6910A to 95C Module
Workshop Manual	TBD
Order Number	VAS6910A/28
Supplier	Porsche.snapon.com
Availability	Delayed - will Auto-Ship when available
Location	Temp Storage in Second PORPAN MRT cabinet Dr 41-50
Note	Workshop Manual ID will be updated when published by PAG

Support

VAS6931/1 | ★★★ | **$ 200.00***

Model lines	Macan (95C)
Use	Lifting the wheel carrier
Workshop Manual	TBD
Order Number	VAS6931/1
Supplier	Porsche.snapon.com
Availability	Immediate availability - Auto-Ship - Phase 1
Location	Temp Storage in Second PORPAN MRT cabinet Dr 41-50
Note	Workshop Manual ID will be updated when published by PAG

Macan H2 BEV Launch

Electronic Strength Tester *DELAYED*

VAS6972 | | **$ 14,160.30***

Model lines	Macan (95C)
Use	Check the insulation strength after repair has been carried out
Workshop Manual	TBD
Order Number	VAS6972
Supplier	Porsche.snapon.com
Availability	Delayed - will Auto-Ship when available
Location	In-Shop
Note	Workshop Manual ID will be updated when published by PAG

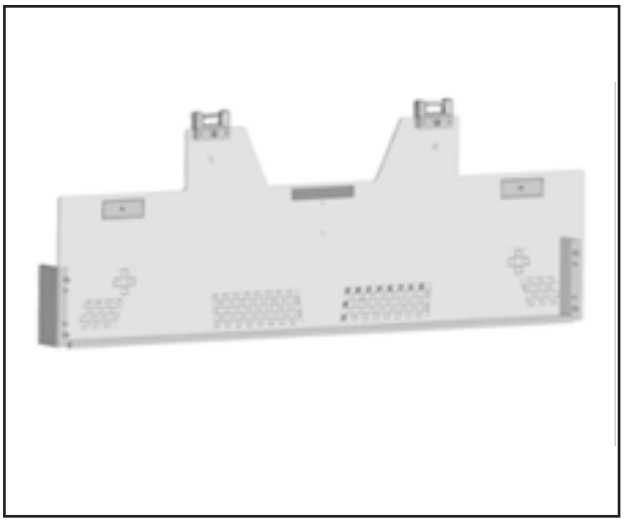

HUD Calibration Board *DELAYED*

VAS721025 | ★★ | **$ 421.50***

Model lines	Macan (95C)
Use	Calibrate the windshield projection
Workshop Manual	TBD
Order Number	VAS721025
Supplier	Porsche.snapon.com
Availability	Delayed - will Auto-Ship when available
Location	In-Shop
Note	Workshop Manual ID will be updated when published by PAG

General Information:

Ordering Process:

Tools identified with a prefix of VAS, VAG and "T":
Place orders via porsche.snapon.com.

Tools with a prefix of 000 721, 918 721, PNA or "P"
Place orders via POLARIS (PPL).

Diagnostic Equipment:
Open a PRMS ticket. Technical Support >> Tester Support

Special Tool Support:

For questions related to VAS, VAG, and "T" tools:
contact SBS customer care at 1-855-895-2013 or PorscheTEP@SnapOn.com.

For Polaris numbers 000.721, 918.721, PNA and "P" tools:
Open a PRMS ticket. Technical Support >> Special Tools

Diagnostic Equipment:
Open a PRMS ticket. Technical Support >> Tester Support

Workshop Equipment Classification

★ Servicing and maintenance

★★ Replacement of units and assemblies

★★★ Disassembly of units and assemblies

★★★★ Rental

Body & Paint

High-voltage

***All prices shown are valid as of the day of publishing and are subject to change without notice.**

© 2024 Porsche Cars North America, Inc.