Various Error Messages in the Instrument Cluster: Checking Splices in the Fuse Box (25/22)

Vehicle Type: **Macan (95B) / Macan S (95B) / Macan Turbo (95B)**

Model Year: **As of 2019 up to 2021**

Concerns: **Engine wire harness body**

Information: **Customers complain about one or more of the following error messages or symptoms on their vehicle.**

- **ACC failure**
- **Suspension system fault**
- **All-wheel drive system failed**
- **Parking brake fault**
- **Vehicle will not start**
- **12-volt vehicle electrical system battery discharged**

During fault finding, one or more faulty splice points on the engine body wire harness are found in the front left fuse box area.

Action required: In the event of a customer complaint, check the fuse box in the front plenum panel and the engine body wire harness. One or more of the following tasks are required, depending on the result of the check:

- Rework splice points
- Rework body
- Replace engine body wire harness
- Replace fuse box cover
- Replace fuse box

For more information, see also the overview below.

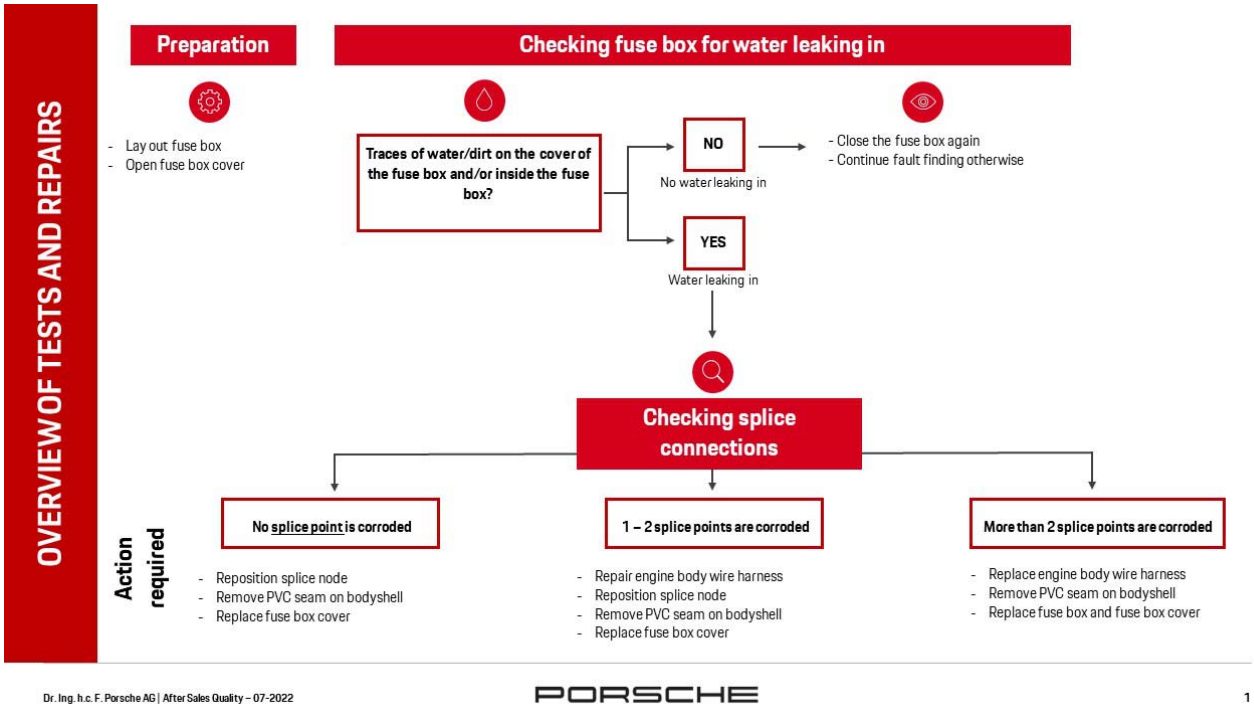

Overview of Tests and Repairs

Installation
Position:

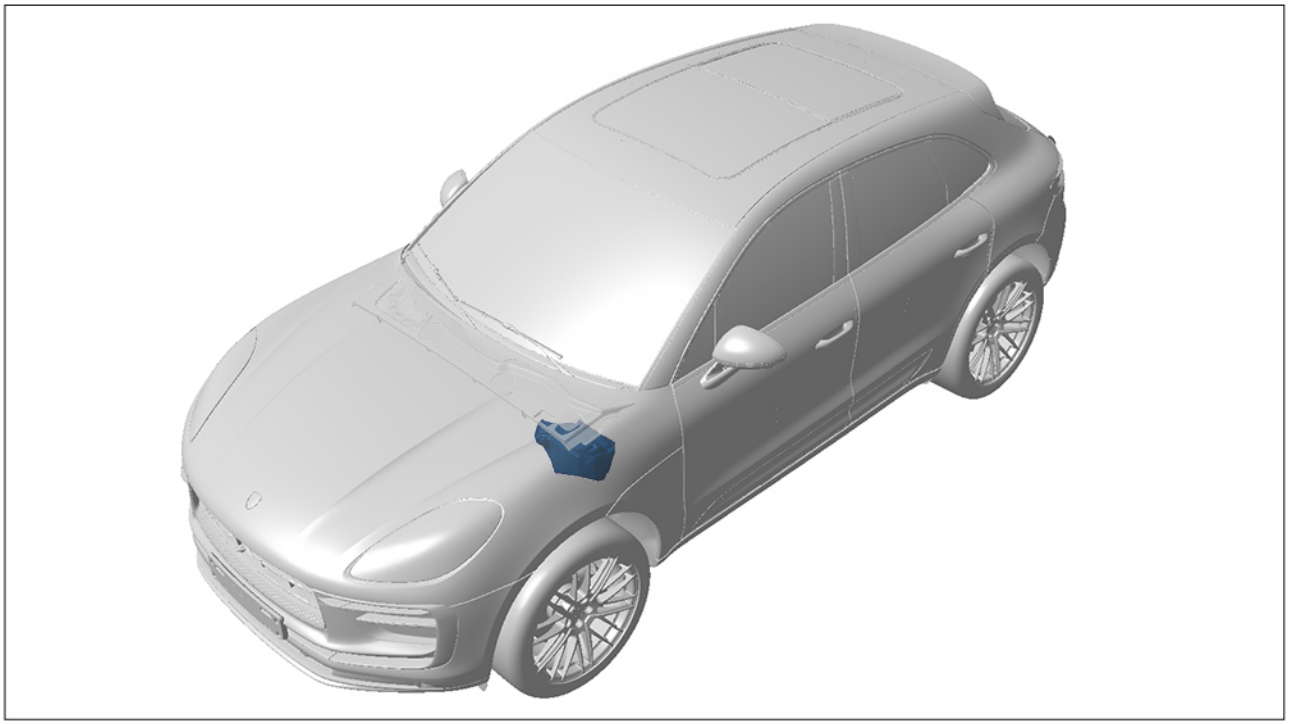

Installation position of fusebox

Expose relay carrier, and check fuse box for water leaking

Work Procedure: 1 Disconnect ground terminal for vehicle electrical system battery.
For instructions, see: ⇒ *Workshop Manual '270619 Removing and installing vehicle electrical system battery'*

2 Move front lid to service position.
For instructions, see: ⇒ *Workshop Manual '552213 Fastening front lid (service position)'*

3 Removing water box cover.
For instructions, see: ⇒ *Workshop Manual '508719 Removing and installing cowl panel cover'*

4 Remove filler neck from the windscreen washer system.
For instructions, see: ⇒ *Workshop Manual '926019 Removing and installing windscreen washer system'*

5 Remove fuse box cover ⇒*Fuse box cover* **-1-**.
For this, unscrew screws ⇒*Fuse box cover* **-2-** and remove fuse box cover ⇒*Fuse box cover* **-1-**.

6 Disconnect relay carrier ⇒*Relay carrier* **-1-** from fuse box.

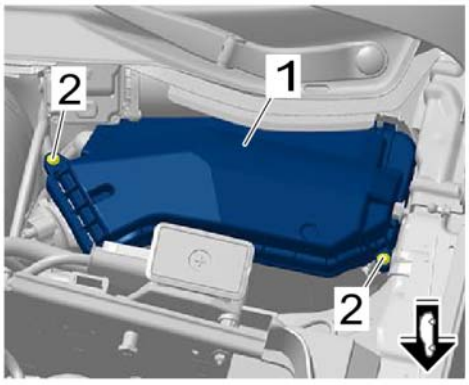

Fuse box cover

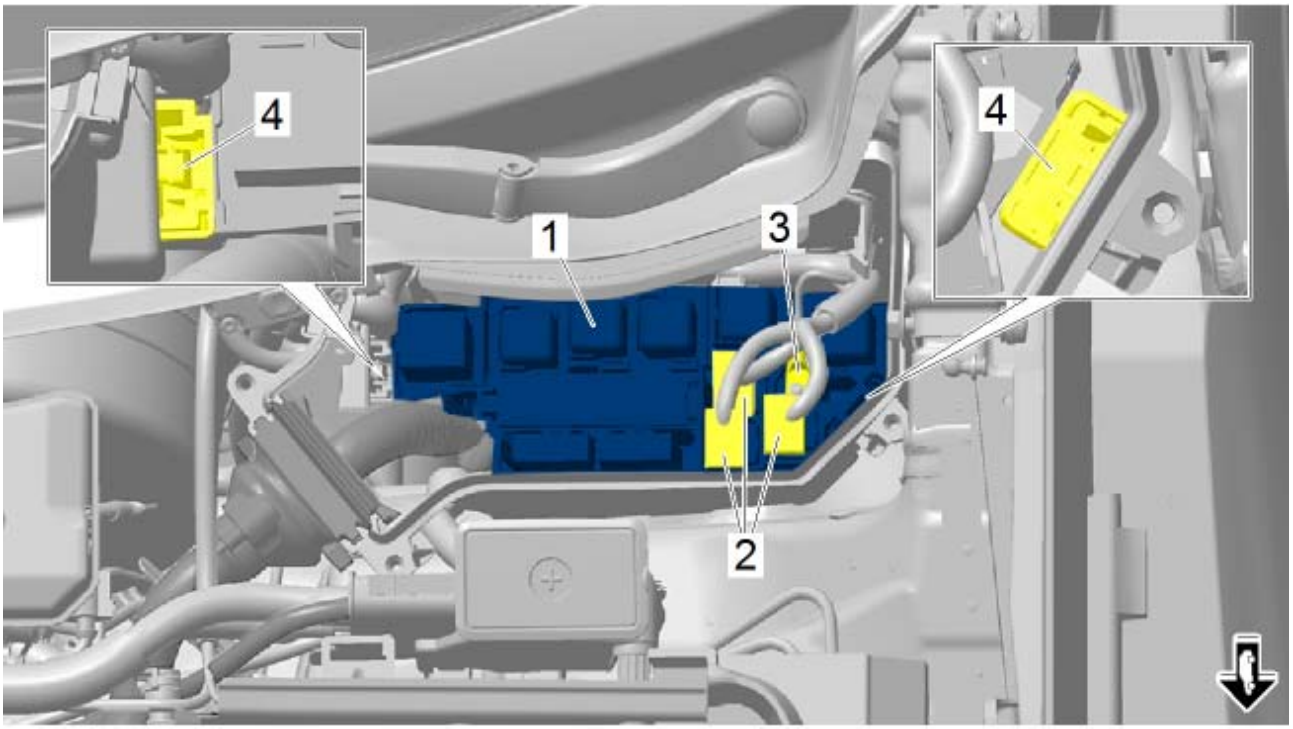

Relay carrier

6.1 Release electric plug connections ⇒*Relay carrier* **-2-** and disconnect them.

6.2 Unscrew nut ⇒*Relay carrier* **-3-**.

6.3 Press locking lugs ⇒*Relay carrier* **-4-** and remove relay carrier ⇒*Relay carrier* **-1-** by pulling it upwards.

7 Checking fuse box for water leaking in.

7.1 Check the seal on the fuse box cover ⇒ *Checking fuse box cover* for dirt and any deformations.

7.2 Check the fuse box in areas ⇒ *Water leak in fuse box* **-5 and 6-** for traces of water leaking in.

Checking fuse box cover

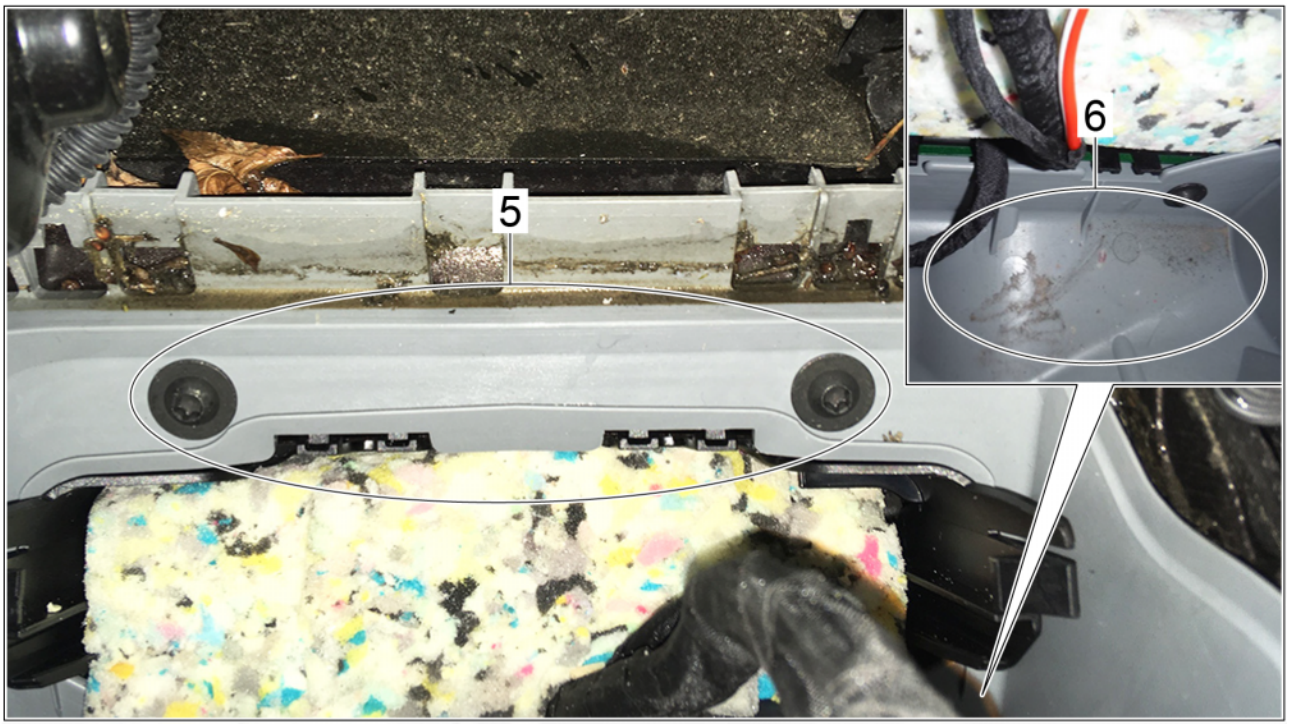

Water leak in fuse box

Assessment		Action
(✓)	The seal on the fuse box cover is clean **and** there are no signs of water leaking into the fuse box.	Re-assemble the fuse box, and continue troubleshooting in other ways.
(✗)	The seal on the fuse box cover is dirty **and** there are signs of water leaking into the fuse box.	Check engine wire harness body. For instructions, see: ⇒ *Technical Information '926019 Checking engine wire harness'*

Checking engine wire harness body

Work Procedure: 1 Cut three tie-wraps ⇒ *Lower relay carrier* **-1-** on the wire harness using a suitable tool.

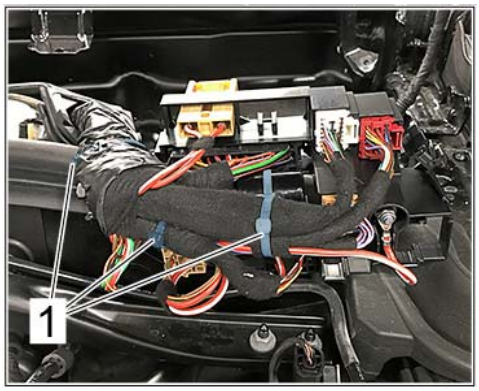

Lower relay carrier

2 Remove insulating tape and fabric tape on the engine body wire harness between the relay carrier ⇒ *Wire harness exposed* **-2-** and rubber sleeve ⇒ *Wire harness exposed* **-3-**.

3 Remove fabric tape on the splice connections in areas ⇒ *Installation position of splice connections* **-A, B-** and ⇒ *Installation position of splice connections* **-C-** for a visual inspection and check the splice points for corrosion.
Start with Segment C.

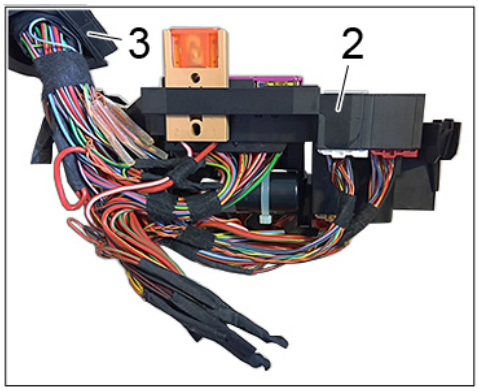

Wire harness exposed

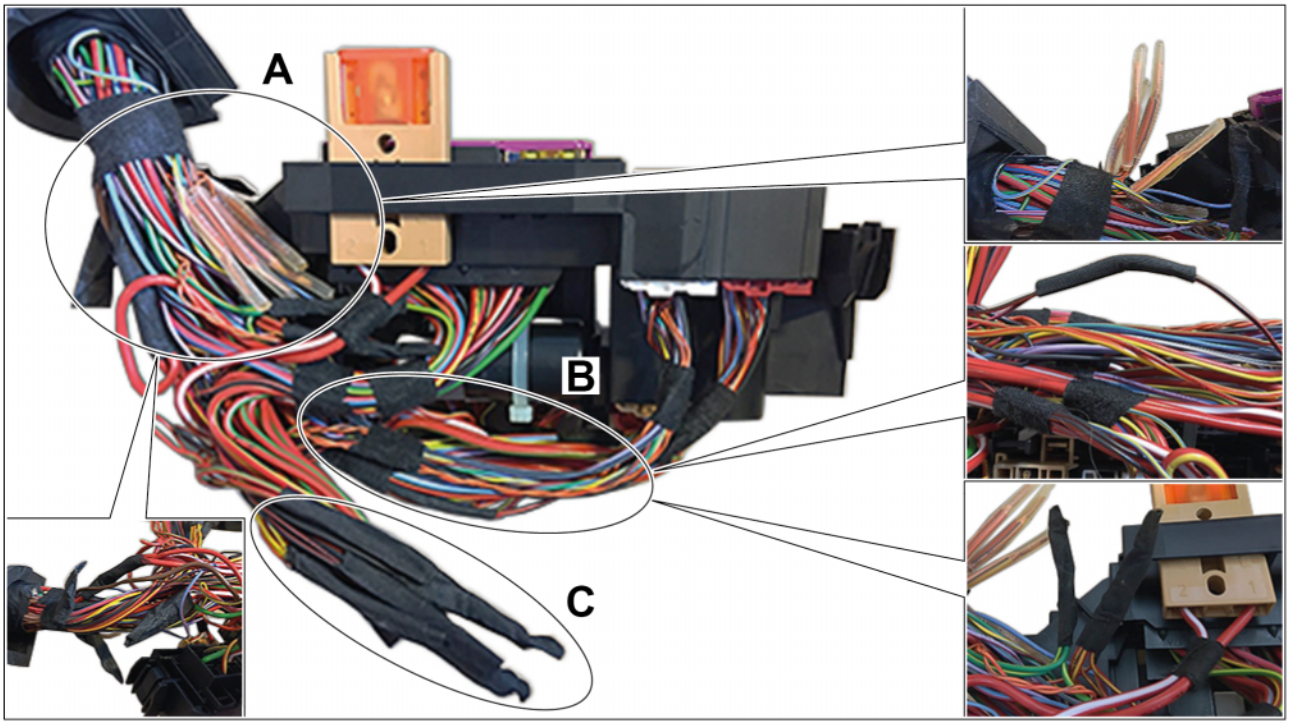

Installation position of splice connections

Information

If more than two splice connections are corroded, cancel the test.
In this case, the engine body wire harness must be replaced. Continue with section: ⇒ *Technical Information '926019 Replacing engine compartment wire harness'*

Example of splice connection OK

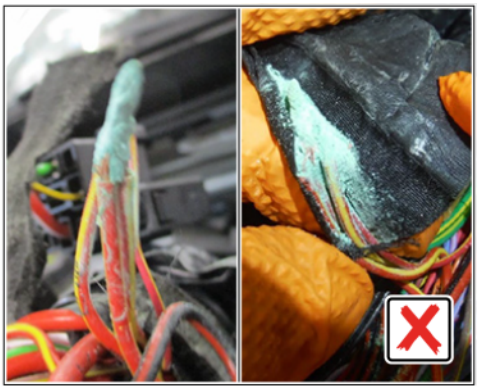

Sample illustration showing splice connection corroded

Assessment		Action
(✓)	Splice connections are **not corroded**.	The fault is not caused by the splice connections of the engine body wire harness. Fault finding must be continued otherwise. Continue with section: ⇒ *Technical Information '926019 Reworking the old engine compartment wire harness'*

(✗)	One or two **splice connections** are **corroded**.	Repairing engine body wire harness. Continue with section: ⇒ *Technical Information '926019 Repairing engine compartment wire harness'*
(✗)	More than two **splice points** are **corroded**.	Replace engine body wire harness. Continue with section: ⇒ *Technical Information '926019 Replacing engine compartment wire harness'*

Replace engine wire harness body and fuse box, rework PVC seam on unpainted bodyshell

Information

The engine body wire harness must be replaced if **more than two splice connections are corroded**. If only one or two splice connections are corroded, repair the engine body wire harness. For instructions, see: ⇒ *Technical Information '926019 Repairing engine wire harness body and reworking PVC seam'*

Parts Info: **Required parts:**

Part No.	Designation – Location	Number
8K1907613C	⇒ Cover – Fuse box	1 piece
8K1907355F	⇒ Housing for control unit – Fuse box	1 piece
95B971072xx*	⇒ Engine wire harness – Engine compartment	1 piece

* Determine the variant of the engine body wire harness required for the respective vehicle using the vehicle identification number in the Porsche Spare Parts Catalogue (PET2).

Required materials:

Part No.	Designation – Location	Quantity
	⇒ Touch-up stick in vehicle color* – Unpainted bodyshell in engine compartment	As required
00004330516	⇒ Coolant additive	20-liter / 5.28 gal container (approx. 0.5 liter / 16.9 fl oz required per vehicle)

Information

On Macan derivatives with V6 engines, the additional parts and materials required for removing and installing the engine must be researched independently.

Work Procedure: 1 Removing engine wire harness body.
For instructions, see:
⇒ *Workshop Manual '975219 Removing and installing engine wire harness body (R4)'*
or
⇒ *Workshop Manual '975219 Removing and installing engine wire harness body'*

2 Loosen wire harness in plenum panel.
To do this, disconnect all electric plug connections on the plenum panel wire harness ⇒ *Installation position of wire harness for plenum panel* **-1-** as far as the fuse box section and remove the plenum panel wire harness as far as the fuse box section.

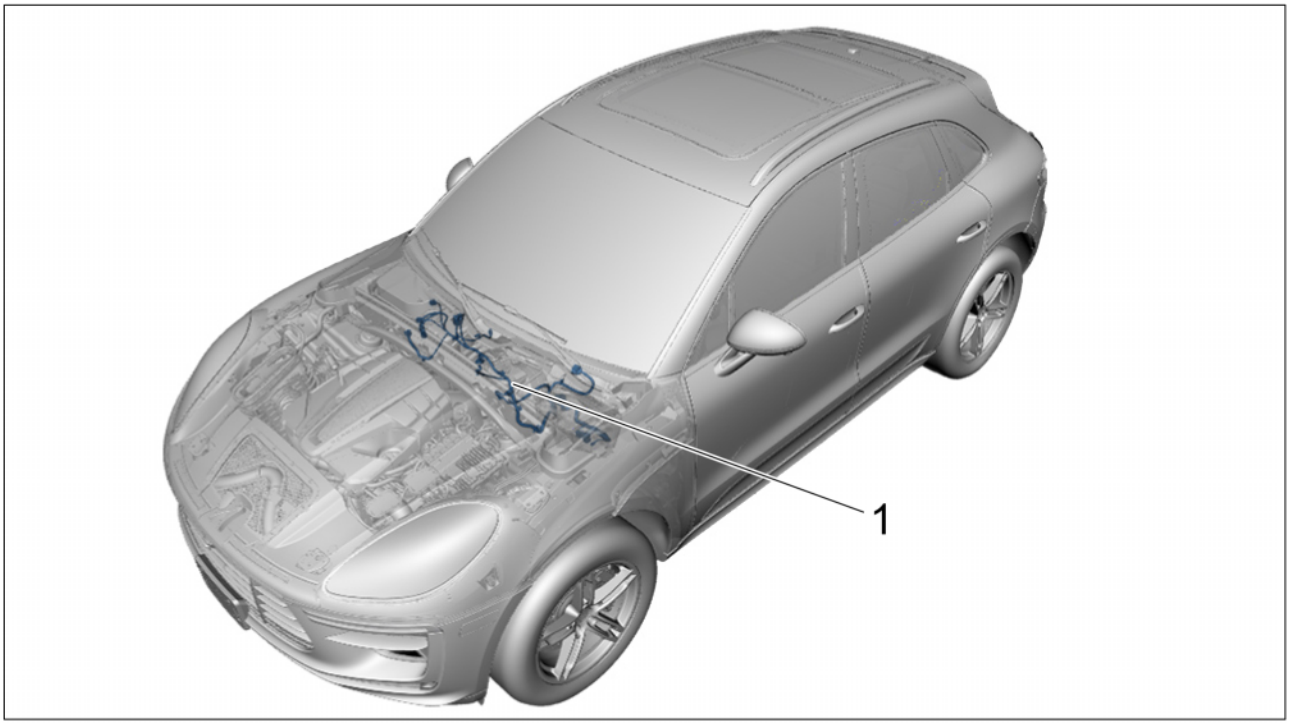

Installation position of wire harness for plenum panel

3 Remove old fuse box.

3.1 Loosen and unscrew screws ⇒ *Remove fuse box* **-1-** on the fuse box ⇒ *Remove fuse box* **-2-**.

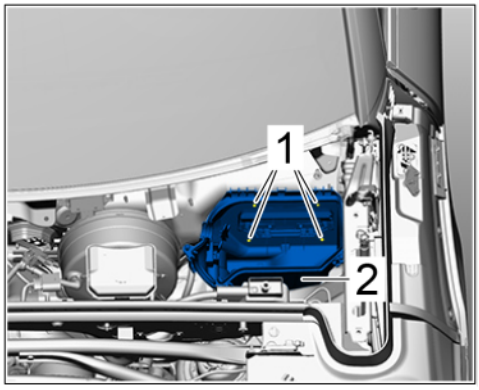

Remove fuse box

3.2 Press locking lugs ⇒*Loosening fuse box* **-3-** upward, release and remove the fuse box ⇒ *Loosening fuse box* **-2-**. Guide the plenum panel wire harness out of the fuse box.

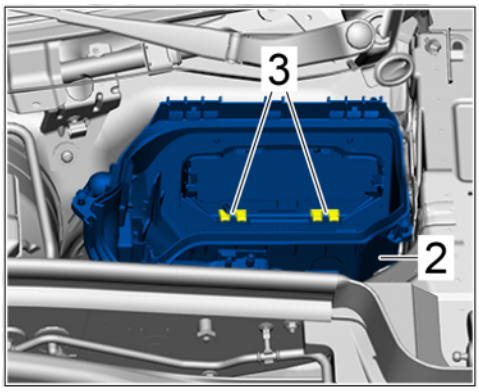

Loosening fuse box

Information

The water leaking into the fuse box is caused by possible contact between the fuse box housing and a PVC seam on the vehicle body. ⇒*Gap from fuse box to unpainted bodyshell with PVC seam* **-A-**
This contact can cause the fuse box to become deformed and result in a leak on the fuse box cover.

To prevent future water leaks, the fuse box must be replaced, and the PVC seam between the fuse box and unpainted bodyshell must be reworked.

Gap from fuse box to unpainted bodyshell with PVC seam

4 Rework PVC seam on the unpainted bodyshell.

4.1 Remove PVC seam in area ⇒ *PVC seam* **-B-** using a suitable tool until it is flush.

4.2 Seal the entire area at which the PVC seam was removed using a suitable touch-up stick for the respective vehicle paintwork to protect the body from corrosion.

4.3 Once the paintwork has dried, install the **new** fuse box. Installation is performed in reverse order to removal.

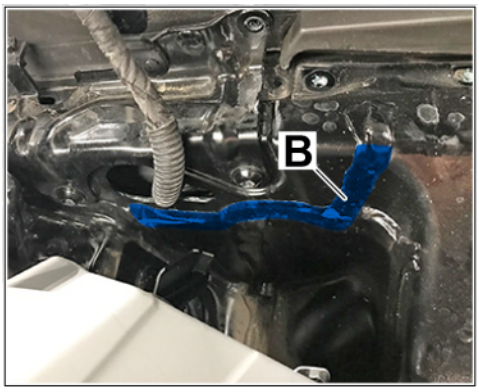

PVC seam

5 Installing wire harness on plenum panel. Installation is performed in reverse order to removal.
Make sure that the electric plug connections are installed and locked correctly.

Information

Before installing the new engine body wire harness, check the position of the splice node.

- If the splice node is already moved upwards ⇒ *Installation position of splice node* **-A-**, the wire harness can be installed.
- If the splice junction is not routed upwards as on the previous wire harness ⇒ *Installation position of splice node* **-B-**, it must be reworked before installation in the vehicle.

For instructions, see: ⇒ *Technical Information '975219 Reworking new engine wire harness on body'*

6

Installing **new** engine wire harness body
For instructions, see:
⇒ *Workshop Manual '975219 Removing and installing engine wire harness body (R4)'*
or
⇒ *Workshop Manual '975219 Removing and installing engine wire harness body'*

7 Install wiper link. ⇒ *Workshop Manual '921919 Removing and installing wiper link'*

8 Fasten relay carrier ⇒ *Relay carrier* **-1-** on the fuse box.

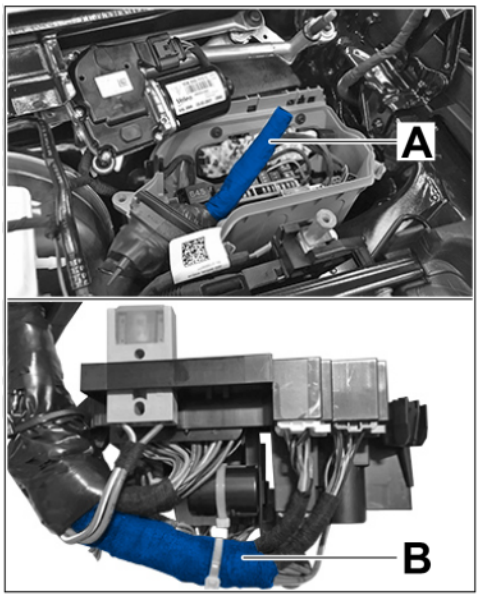

Installation position of splice node

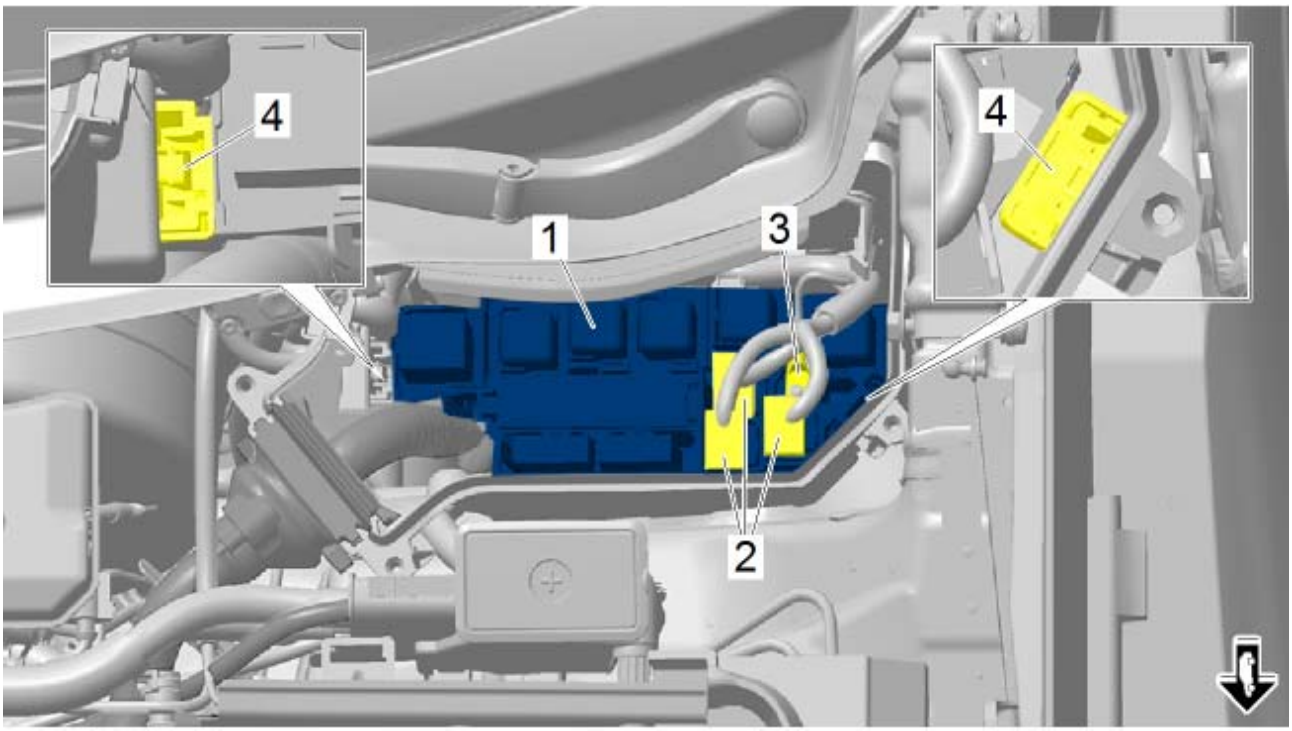

Relay carrier

8.1 Push in relay carrier ⇒*Relay carrier* **-1-** until the locking lugs ⇒*Relay carrier* **-4-** engage securely.

8.2 Screw on and tighten nut ⇒*Relay carrier* **-3-**.

Tightening torque 9 Nm

8.3 Connect and lock electric plug connections ⇒*Relay carrier* **-2-**.

9 Install **new** fuse box cover ⇒*Fuse box cover* **-1-**.

9.1 Install cover on fuse box ⇒*Fuse box cover* **-1-**.

9.2 Install and tighten screws ⇒*Fuse box cover* **-2-**.

Tightening torque 3 Nm

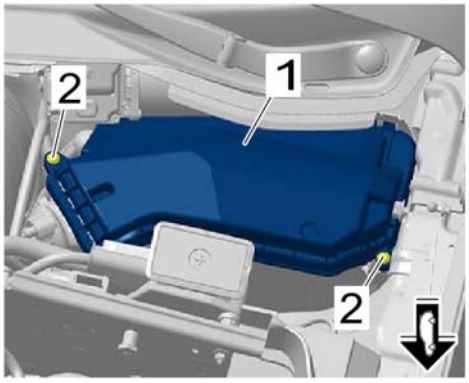

Fuse box cover

10 Install filler neck on windscreen washer system.
For instructions, see: ⇒*Workshop Manual '926019 Removing and installing windscreen washer system'*

11 Install water tank cover.
For instructions, see: ⇒*Workshop Manual '508719 Removing and installing cowl panel cover'*

12 Removing front lid service position.
For instructions, see: ⇒ *Workshop Manual '552213 Fastening front lid (service position)'*

13 Connect ground terminal of the vehicle electrical system battery.
For instructions, see: ⇒ *Workshop Manual '270619 Removing and installing vehicle electrical system battery'*

Invoicing:

Information

The labor operation "Checking engine wire harness" includes the following tasks:

- Uncovering engine wire harness body
- Checking engine wire harness body
- Checking, removing and installing fuse box
- Reworking PVC seam

When replacing the wire harness, the relevant labor operation "Removing and installing engine wire harness" must also be tightened.

APOS	Labor operation	I No.
97521942	Removing and installing engine wire harness (R4)	
97521960	Removing and installing engine wire harness (V6)	
97520102	Checking engine wire harness	

PCSS encryption:

Location (FES5)	97520	Engine wire harness
Damage type (SA4)	3319	Corrosion on plug connections

References:

⇒ *Workshop Manual '552213 Fastening front lid (service position)'*

⇒ *Workshop Manual '270619 Removing and installing vehicle electrical system battery'*

⇒ *Workshop Manual '508719 Removing and installing cowl panel cover'*

⇒ *Workshop Manual '926019 Removing and installing windscreen washer system'*

⇒ *Workshop Manual '975219 Removing and installing engine wire harness body (R4)'*

⇒ *Workshop Manual '975219 Removing and installing engine wire harness body'*

⇒ *Workshop Manual '921919 Removing and installing wiper link'*

Repairing engine wire harness body and reworking PVC seam

Information

The engine body wire harness must only be repaired if **a maximum of two splice connections are corroded** and must be reworked.
If more than two splice connections are corroded, the engine body wire harness must be replaced.
For instructions, see: ⇒ *Technical Information '921919 Replacing engine wire harness body and fuse box, reworking PVC seam on unpainted bodyshell'*

Parts Info: **Required parts:**

Part No.	Designation – Location	Number
8K1907613C	⇒ Cover – Fuse box	1 piece

Required materials (usually already available at the Porsche dealer):

Designation	Quantity
⇒ Connecting sleeve (crimping sleeve) – commercially available	As required
⇒ Repair cable – commercially available	Length as required
⇒ Heat shrink-fit hose – commercially available	As required
⇒ Tie-wrap 0.5 x 20 mm – commercially available	4 pieces
⇒ PVC adhesive tape – commercially available e.g. TESA tesaflex 4163	As required
⇒ Fleece adhesive tape, approx. 19 mm wide – commercially available e.g. TESA 51616 ID	Length as required
⇒ Touch-up stick in vehicle color* – Unpainted bodyshell in engine compartment	As required

Tools:

- **VAS 1978/3 - Stripping pliers**
- **VAS 1978/1A Crimping pliers**
- **VAS 1978/14A Hot-air blower**

Work Procedure:

Information

Choose a place for the joint where there is enough space for connecting all the individual lines.

Do not cut the lines too short in case they have to be laid in a different position if there is insufficient space in the area of the joint.

Information

The greatest care must be used in the individual work steps for stripping insulation from, crimping, and shrinking/insulating the electrical lines.

The procedure for stripping insulation from, crimping, and shrinking/insulating the electrical lines must be complied with and observed.

Crimping samples must be prepared before beginning work.

1 Cut back electric lines at the affected splice point until no more corrosion is visible.

1.1 To do this, cut out the corroded area of the electric lines.

1.2 Slide shrink-fit hose onto the lines.

1.3 Strip 10 mm of insulation off electrical lines.

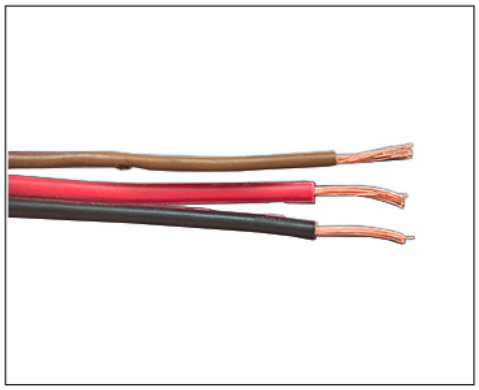

Insulated lines

1.4 Crimp electric lines with **crimping pliers** using crimping sleeves or a combination of crimp and shrink-fit hose.

1.5 Slide shrink-fit hose over the crimp connections and carefully shrink it to make it watertight using the **hot-air blower**.

1.6 Wrap commercially available PVC adhesive tape all around the joints.

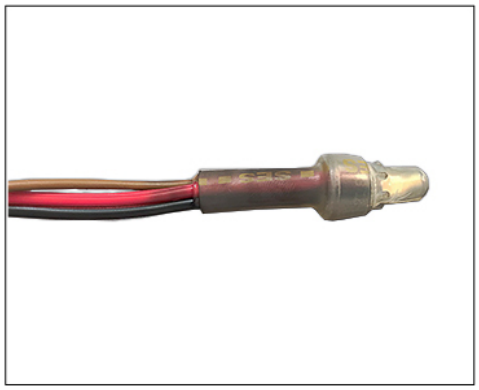

Repaired splice point (example)

Information

Splice connections that were opened and evaluated as OK must be protected from external influences either with PVC adhesive tape or a water-resistant heat shrink hose depending on the position on the engine body wire harness.

2 Insulate splice connections in the area ⇒ *Splices exposed* **-B-** using a water-resistant heat shrink-fit hose.
Insulation with PVC adhesive tape is sufficient on splice connections in the area ⇒ *Splices exposed* **-A- and** ⇒ *Splices exposed* **-C-**.

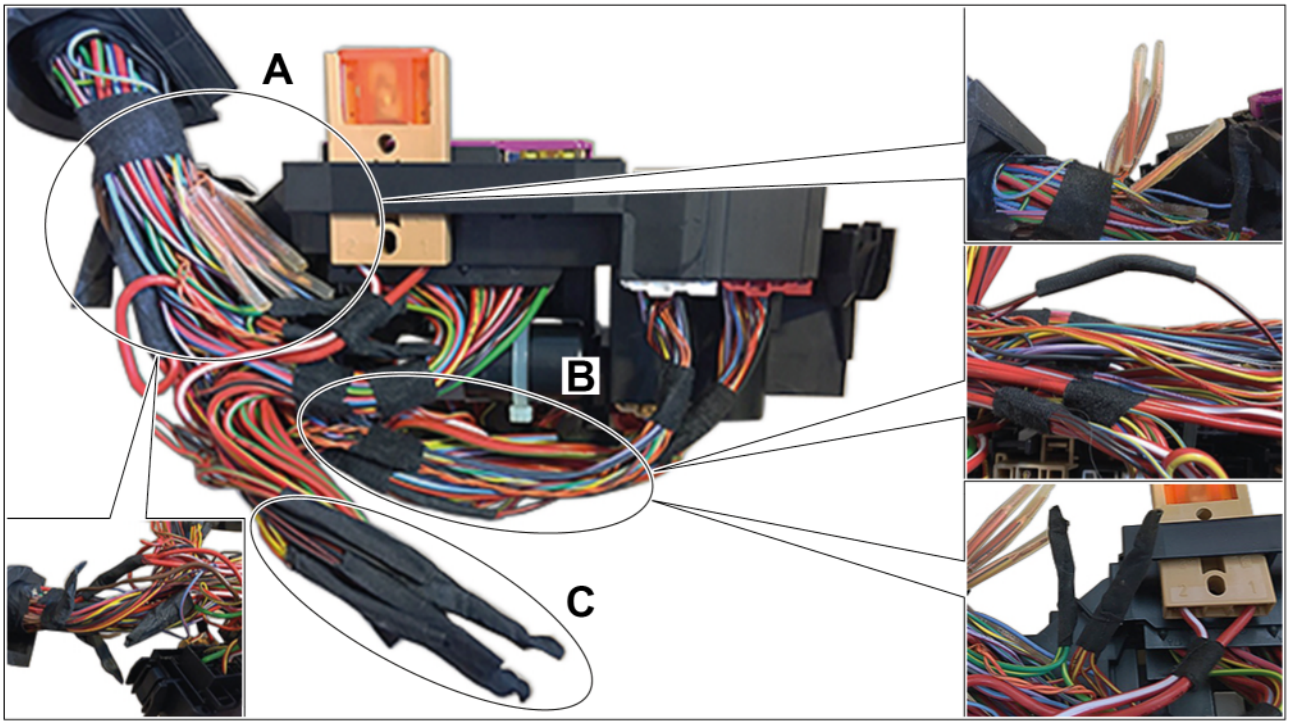

Splices exposed

Example of insulation with PVC adhesive tape

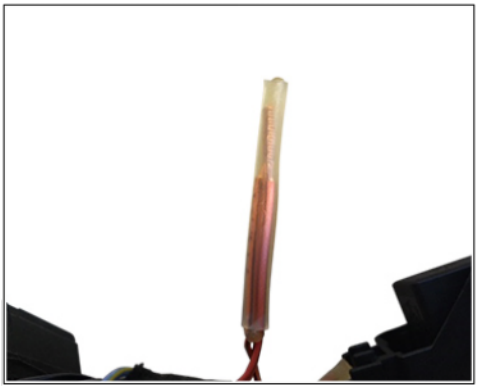

Example of seal with heat-shrink-fit hose

3 Secure engine wire harness body to the relay carrier.

3.1 Wrap ⇒ *Securing individual lines* with fleece adhesive tape around the individual lines at the marked areas.

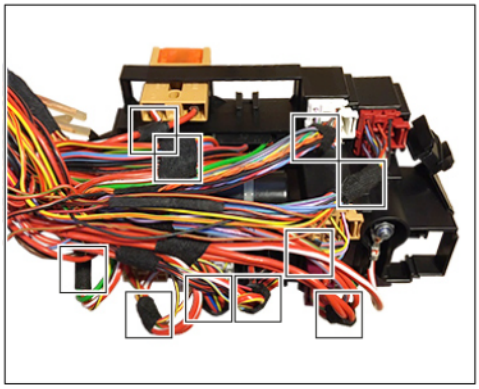

Securing individual lines

3.2 Wrap with fleece adhesive tape around the lines in the marked area and fasten ⇒ *Securing lines* **-1-** to the relay carrier each with a tie-wrap.

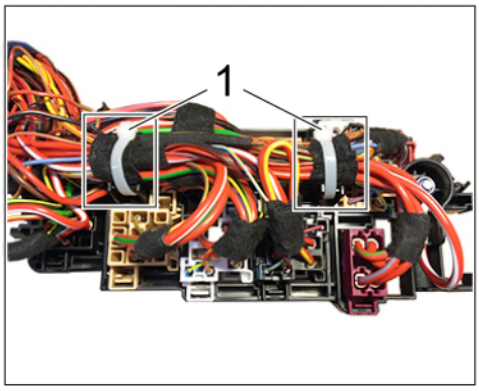

Securing lines

3.3 Wrap the engine wire harness body at the positions ⇒ *Wrapping engine wire harness body* **-2-** and at the splice node ⇒ *Wrapping engine wire harness body* **-3-** with fleece adhesive tape.

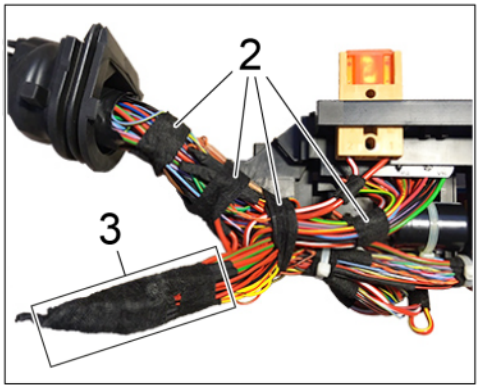

Wrapping engine wire harness body

3.4 Route splice node ⇒ *Securing splice node* **-5-** upwards and fasten ⇒ *Securing splice node* **-6-**to the relay carrier together using the remaining wire harness and a tie-wrap.

Information

The water leaking into the fuse box is caused by possible contact between the fuse box housing and a PVC seam on the vehicle body.
This contact can cause the fuse box to become deformed and result in a leak on the fuse box cover.

To prevent future water leaks, the fuse box cover must be replaced, and the PVC seam between the fuse box and unpainted bodyshell must be reworked.

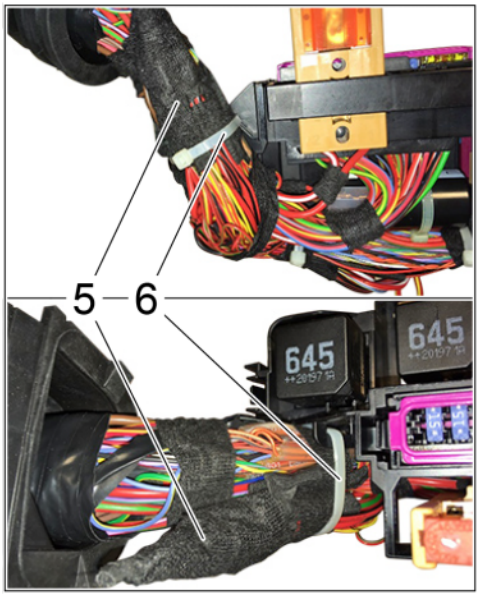

Securing splice node

Gap from fuse box to unpainted bodyshell with PVC seam

4 Removing wiper link. ⇒ *Workshop Manual '921919 Removing and installing wiper link'*

5 Loosen fuse box to allow access to the PVC seam.

5.1 Loosen and unscrew screws ⇒ *Remove fuse box* **-1-** on the fuse box ⇒ *Remove fuse box* **-2-**.

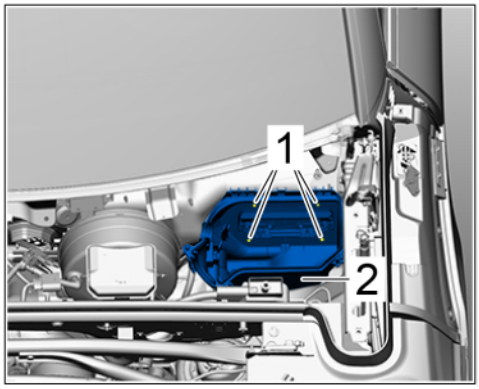

Remove fuse box

5.2 Press locking lugs ⇒*Loosening fuse box* **-3-** up and release them. Remove the fuse box as far as required as the existing plenum panel wire harness can be used. ⇒*Rework position of fuse box for PVC seam*

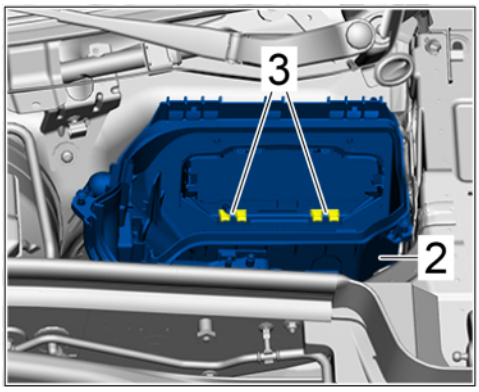

Loosening fuse box

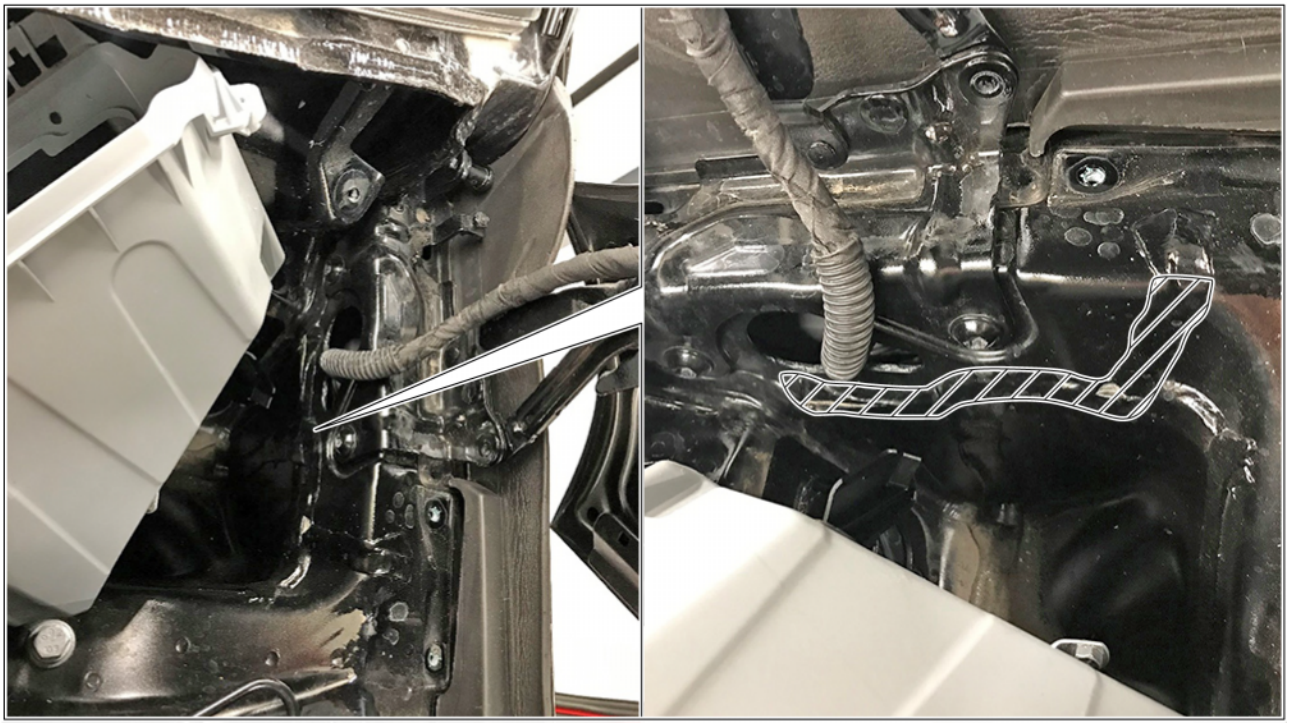

Rework position of fuse box for PVC seam

5.3 Remove PVC seam in area ⇒ *PVC seam* **-B-** using a suitable tool until it is flush.

5.4 Seal the entire area at which the PVC seam was removed using a suitable touch-up stick for the respective vehicle paintwork to protect the body from corrosion.

5.5 Once the paintwork has dried, re-install the fuse box. Installation is performed here in reverse order to removal.

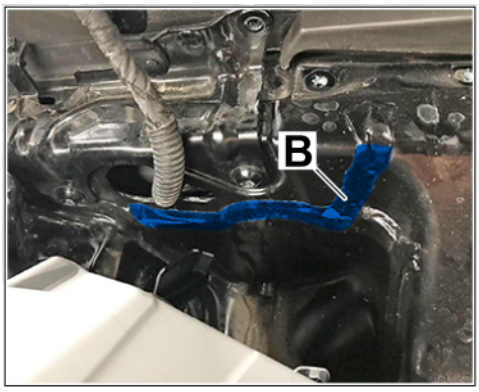

PVC seam

6 Install wiper link. ⇒ *Workshop Manual '921919 Removing and installing wiper link'*

7 Fasten relay carrier ⇒ *Relay carrier* **-1-** to the fuse box.

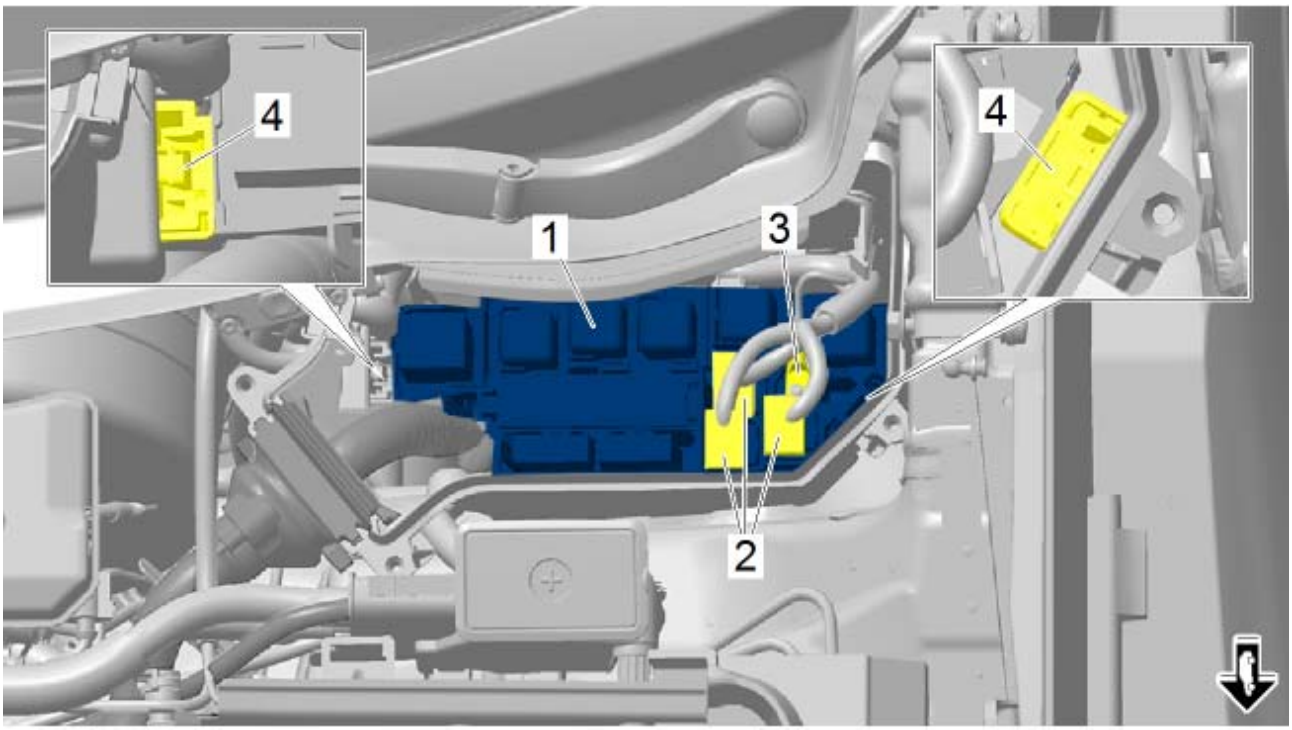

Relay carrier

7.1 Push in relay carrier ⇒ *Relay carrier* **-1-** until the locking lugs ⇒ *Relay carrier* **-4-** engage securely.

7.2 Screw on and tighten nut ⇒ *Relay carrier* **-3-**.

Tightening torque 9 Nm

7.3 Connect and lock electric plug connections ⇒ *Relay carrier* **-2-**.

8 Install **new** fuse box cover ⇒*Fuse box cover* **-1-**.

8.1 Install cover on fuse box ⇒*Fuse box cover* **-1-**.

8.2 Install and tighten screws ⇒*Fuse box cover* **-2-**.

Tightening torque 3 Nm

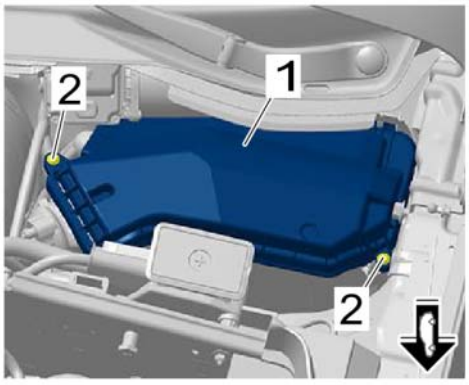

Fuse box cover

9 Install filler neck on windscreen washer system.
For instructions, see: ⇒*Workshop Manual '926019 Removing and installing windscreen washer system'*

10 Install water tank cover.
For instructions, see: ⇒*Workshop Manual '508719 Removing and installing cowl panel cover'*

11 Removing front lid service position.
For instructions, see: ⇒*Workshop Manual '552213 Fastening front lid (service position)'*

12 Connect ground terminal of vehicle electrical system battery.
For instructions, see: ⇒*Workshop Manual '270619 Removing and installing vehicle electrical system battery'*

Invoicing:

Information

The labor operation "Checking engine wire harness" specified below includes all tasks required for this test and repair path:

- Exposing engine wire harness body
- Checking engine wire harness body
- Repair engine body wire harness
- Checking, disconnecting and fastening fuse box
- Reworking PVC seam

For documentation and warranty invoicing, enter the labor operation and PCSS encryption specified below in the warranty claim:

APOS	Labor operation	I No.
97520103	Checking engine wire harness	

PCSS encryption:

Location (FES5)	97520	Engine wire harness
Damage type (SA4)	4011	loose contact, contact error

References: ⇒ *Workshop Manual '552213 Fastening front lid (service position)'*

⇒ *Workshop Manual '270619 Removing and installing vehicle electrical system battery'*

⇒ *Workshop Manual '508719 Removing and installing cowl panel cover'*

⇒ *Workshop Manual '926019 Removing and installing windscreen washer system'*

⇒ *Workshop Manual '921919 Removing and installing wiper link'*

Reworking old engine wire harness on body

Part Nos.: **Required parts:**

Part No.	Designation – Location	Number
8K1907613C	⇒ Cover – Fuse box	1 piece

Required materials (usually already available at the Porsche dealer):

Designation	Quantity
⇒ Heat shrink-fit hose – commercially available	As required
⇒ Tie-wrap 0.5 x 20 mm – commercially available	4 pieces
⇒ PVC adhesive tape – commercially available e.g. TESA tesaflex 4163	As required
⇒ Fleece adhesive tape, approx. 19 mm wide – commercially available e.g. TESA 51616 ID	Length as required
⇒ Touch-up stick in vehicle color* – Unpainted bodyshell in engine compartment	As required

Work Procedure:

Information

Splice connections that were opened and evaluated as OK must be protected from external influences either with a PVC adhesive tape or a water-resistant heat shrink hose depending on the position on the engine body wire harness.

1 Insulate splice connections in the area ⇒ *Splices exposed* **-B-** using a water-resistant heat shrink-fit hose.
Insulation with PVC adhesive tape is sufficient on splice connections in the area ⇒ *Splices exposed* **-A- and** ⇒ *Splices exposed* **-C-**.

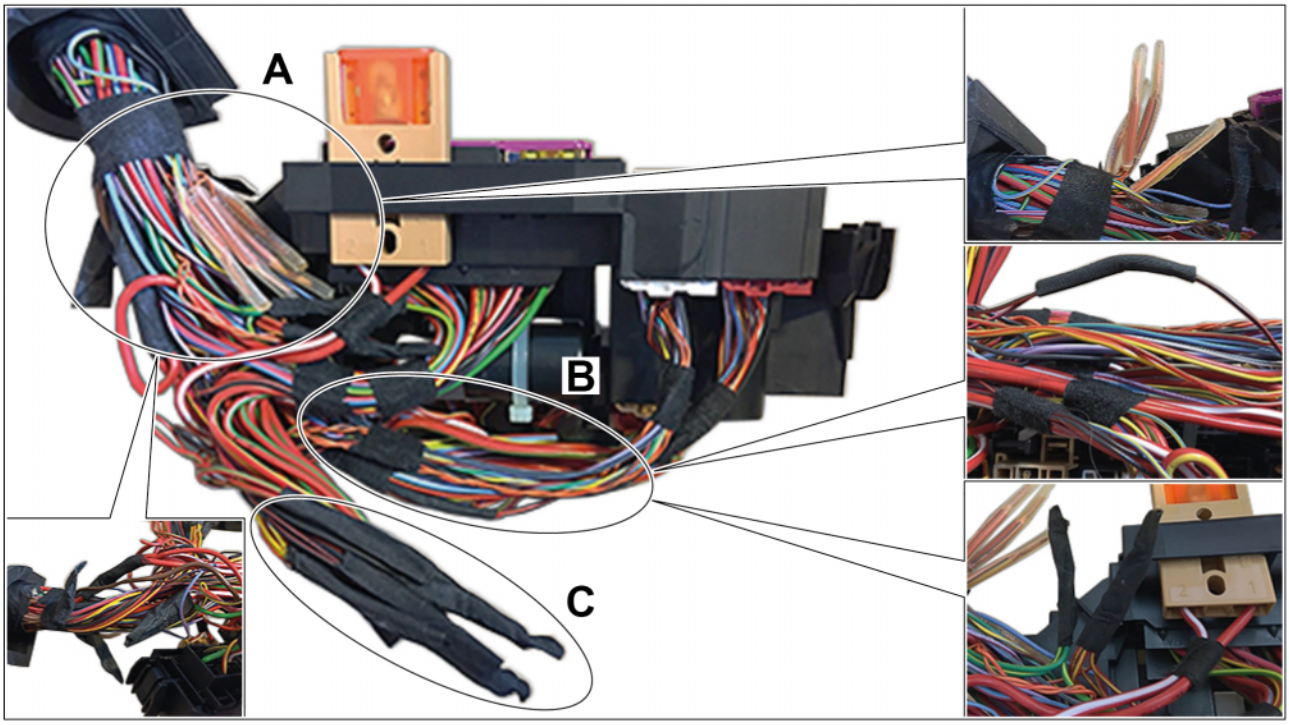

Splices exposed

Example of insulation with PVC adhesive tape

Example of seal with heat-shrink-fit hose

2 Secure engine wire harness body to the relay carrier.

2.1 Wrap with fleece adhesive tape around the individual lines at the marked areas. ⇒ *Securing individual lines*

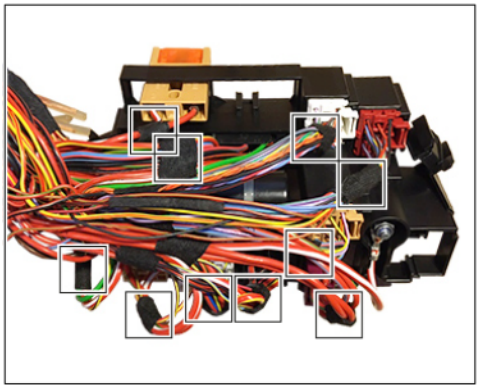

Securing individual lines

2.2 Wrap with fleece adhesive tape around the lines in the marked area and fasten ⇒ *Securing lines* **-1-** on the relay carrier each with a tie-wrap.

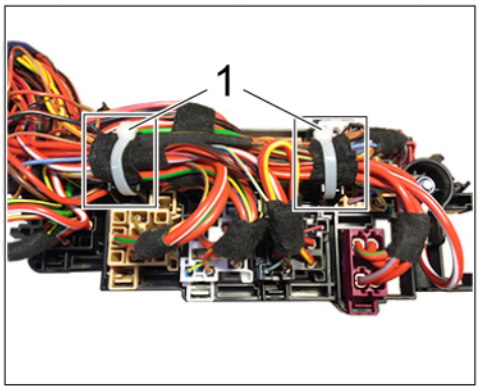

Securing lines

2.3 Wrap the engine wire harness body at the positions ⇒ *Wrapping engine wire harness body* **-2-** and at the splice node ⇒ *Wrapping engine wire harness body* **-3-** with fleece adhesive tape.

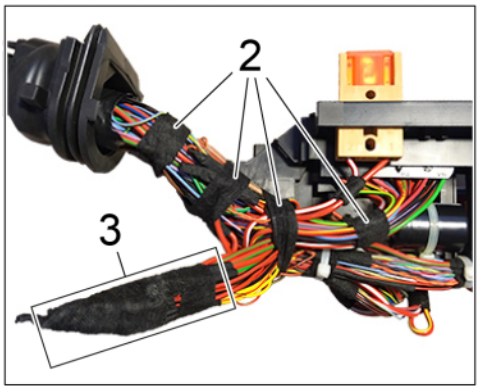

Wrapping engine wire harness body

2.4 Route splice node ⇒ *Securing splice node* **-5-** upwards and fasten ⇒ *Securing splice node* **-6-**to the relay carrier together using the remaining wire harness and the tie-wrap.

Information

The water leaking into the fuse box is caused by possible contact between the fuse box housing and a PVC seam on the vehicle body.
This contact can cause the fuse box to become deformed and result in a leak on the fuse box cover.

To prevent future water leaks, the fuse box cover must be replaced, and the PVC seam between the fuse box and unpainted bodyshell must be reworked.

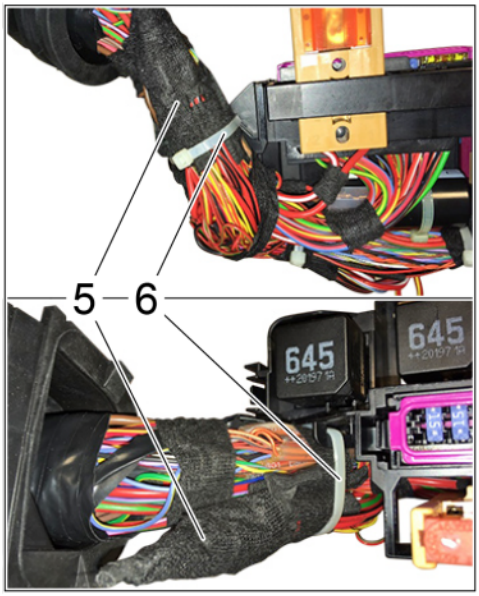

Securing splice node

Gap from fuse box to unpainted bodyshell with PVC seam

3 Removing wiper link. ⇒ *Workshop Manual '921919 Removing and installing wiper link'*

4 Loosen fuse box to allow access to the PVC seam.

4.1 Loosen and unscrew screws ⇒ *Remove fuse box* **-1-** on the fuse box ⇒ *Remove fuse box* **-2-**.

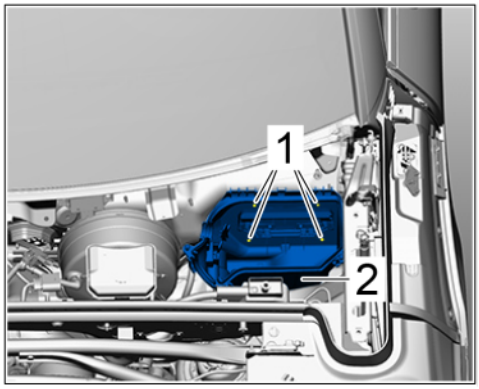

Remove fuse box

4.2 Press locking lugs ⇒*Loosening fuse box* **-3-** up and release them. Remove the fuse box as far as required as the existing plenum panel wire harness can be used. ⇒*Rework position of fuse box for PVC seam*

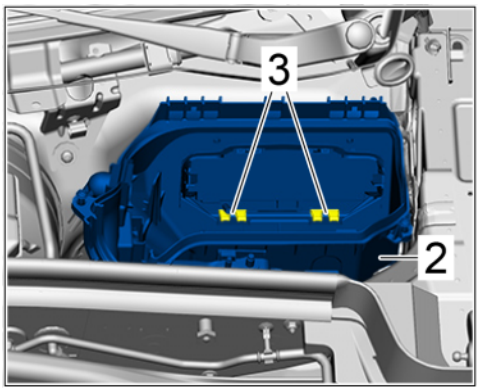

Loosening fuse box

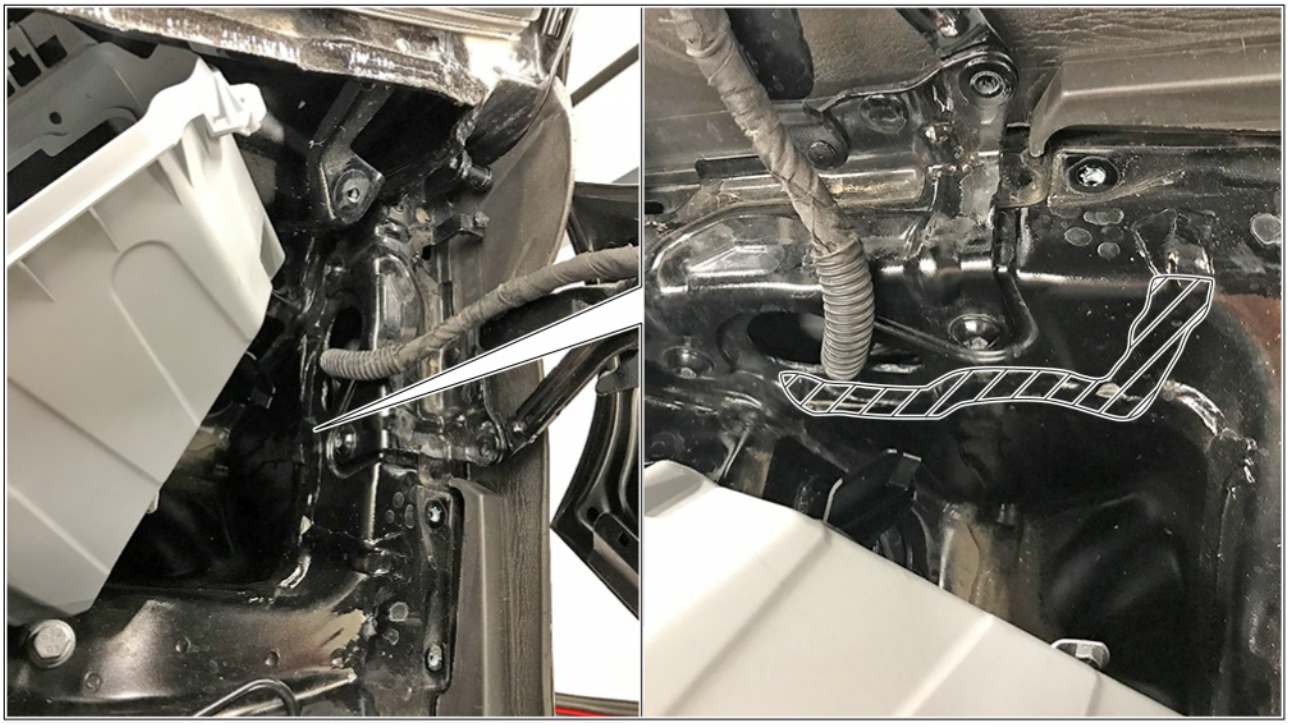

Rework position of fuse box for PVC seam

4.3 Remove PVC seam in area ⇒ *PVC seam* **-B-** using a suitable tool until it is flush.

4.4 Seal the entire area at which the PVC seam was removed using a suitable touch-up stick for the respective vehicle paintwork to protect the body from corrosion.

4.5 Once the paintwork has dried, re-install the fuse box. Installation is performed here in reverse order to removal.

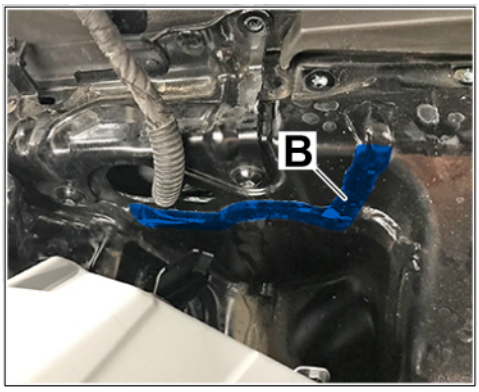

PVC seam

5 Install wiper link. ⇒ *Workshop Manual '921919 Removing and installing wiper link'*

6 Fasten relay carrier ⇒ *Relay carrier* **-1-** to the fuse box.

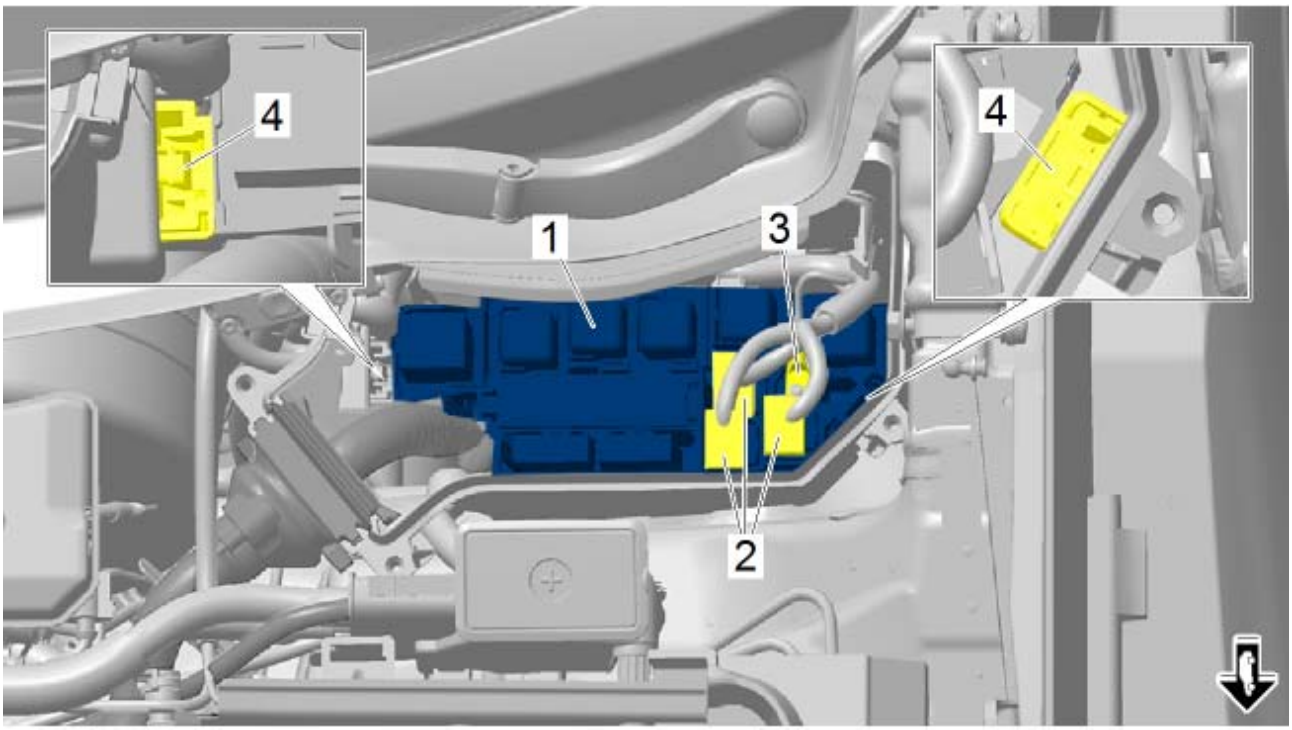

Relay carrier

6.1 Push in relay carrier ⇒ *Relay carrier* **-1-** until the locking lugs ⇒ *Relay carrier* **-4-** engage securely.

6.2 Screw on and tighten nut ⇒ *Relay carrier* **-3-**.

Tightening torque 9 Nm

6.3 Connect and lock electric plug connections ⇒ *Relay carrier* **-2-**.

7 Install **new** fuse box cover ⇒ *Fuse box cover* **-1-**.

7.1 Install cover on fuse box ⇒ *Fuse box cover* **-1-**.

7.2 Install and tighten screws ⇒ *Fuse box cover* **-2-**.

Tightening torque 3 Nm

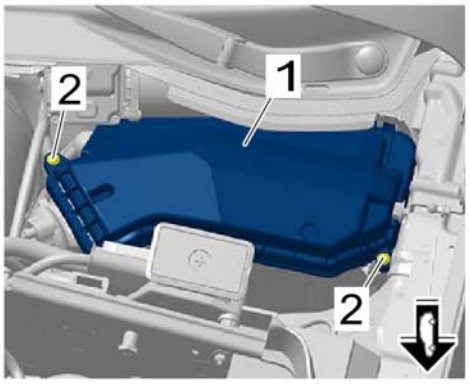

Fuse box cover

8 Install filler neck on windscreen washer system.
For instructions, see: ⇒ *Workshop Manual '926019 Removing and installing windscreen washer system'*

9 Install water tank cover.
For instructions, see: ⇒ *Workshop Manual '508719 Removing and installing cowl panel cover'*

10 Removing front lid service position.
For instructions, see: ⇒ *Workshop Manual '552213 Fastening front lid (service position)'*

11 Connect ground terminal of vehicle electrical system battery.
For instructions, see: ⇒ *Workshop Manual '270619 Removing and installing vehicle electrical system battery'*

Invoicing:

Information

The labor operation "Checking engine wire harness" specified below includes all tasks required for this test and repair path:

- Exposing engine wire harness body
- Checking engine wire harness body
- Reworking engine wire harness on body
- Checking, disconnecting and fastening fuse box
- Reworking PVC seam

For documentation and warranty invoicing, enter the labor operation and PCSS encryption specified below in the warranty claim:

APOS	Labor operation	I No.
97520100	Checking engine wire harness	

PCSS encryption:

Location (FES5)	97520	Wire harness
Damage type (SA4)	9735	Repair in accordance with PAG instructions

References: ⇒ *Workshop Manual '552213 Fastening front lid (service position)'*

⇒ *Workshop Manual '270619 Removing and installing vehicle electrical system battery'*

⇒ *Workshop Manual '508719 Removing and installing cowl panel cover'*

⇒ *Workshop Manual '926019 Removing and installing windscreen washer system'*

Reworking new engine wire harness on body

Information

If the splice node is already routed upwards ⇒ *Installation position of splice node* **-A-**, the wire harness for the engine body does not have to be reworked. If the splice node on the new engine body wire harness is not yet routed upwards ⇒ *Installation position of splice node* **-B-**, the wire harness must be reworked before installation in the vehicle.

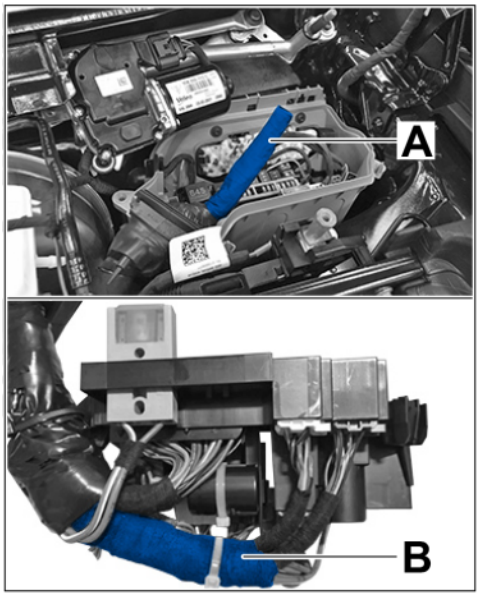

Installation position of splice node

Work Procedure:

1 Cut three tie-wraps ⇒ *Lower relay carrier* **-1-** on the wire harness using a suitable tool.

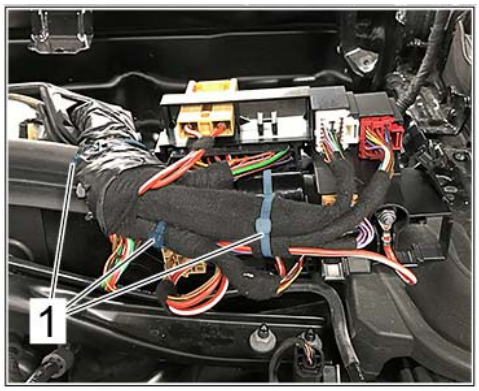

Lower relay carrier

2 Remove insulating tape and fabric tape on the engine body wire harness between the relay carrier ⇒ *Wire harness exposed* **-2-** and rubber sleeve⇒ *Wire harness exposed* **-3-**.

3 Secure engine wire harness body to the relay carrier.

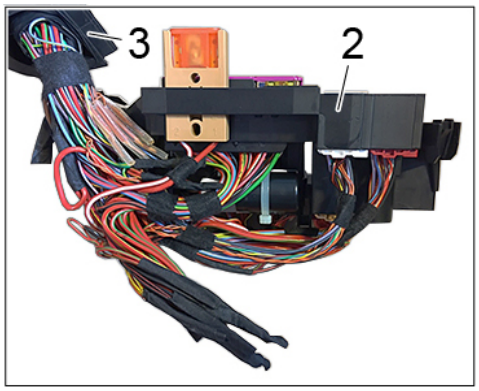

Wire harness exposed

3.1 Wrap with fleece adhesive tape around the lines in the marked area and fasten ⇒ *Securing lines* **-1-** to the relay carrier each with a tie-wrap.

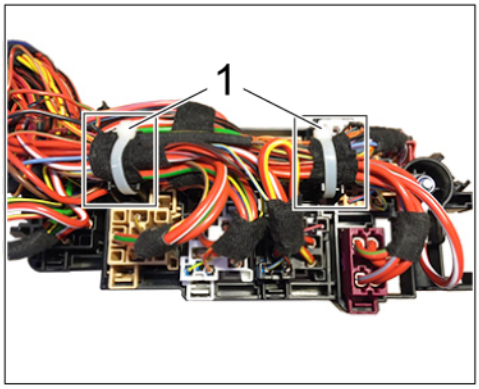

Securing lines

3.2 Wind fleece adhesive tape around the engine wire harness body at positions ⇒ *Wrapping engine wire harness body* **-2-** and at the splice node⇒ *Wrapping engine wire harness body* **-3-**.

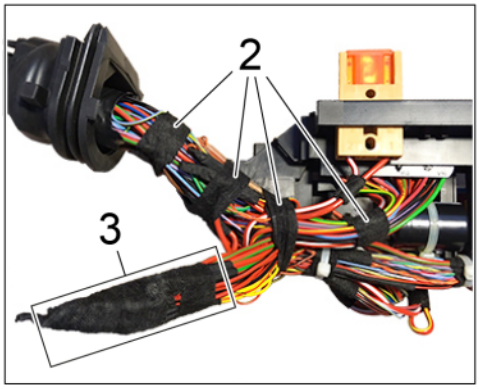

Wrapping engine wire harness body

3.3 Route splice node ⇒ *Securing splice node* **-5-** upwards and fasten to the relay carrier together using the remaining wire harness and a tie-wrap⇒ *Securing splice node* **-6-**.

4 Install engine wire harness body.
Proceed as described under section ⇒ *Technical Information '926019 Replacing engine wire harness body and fuse box, reworking PVC seam on bodyshell'*, Step 7 onwards.

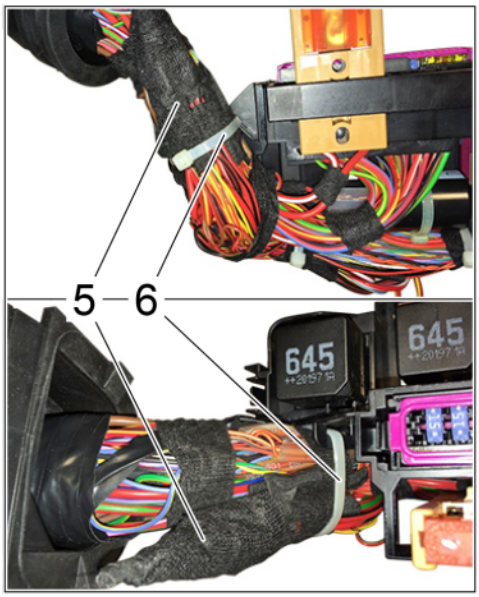

Securing splice node