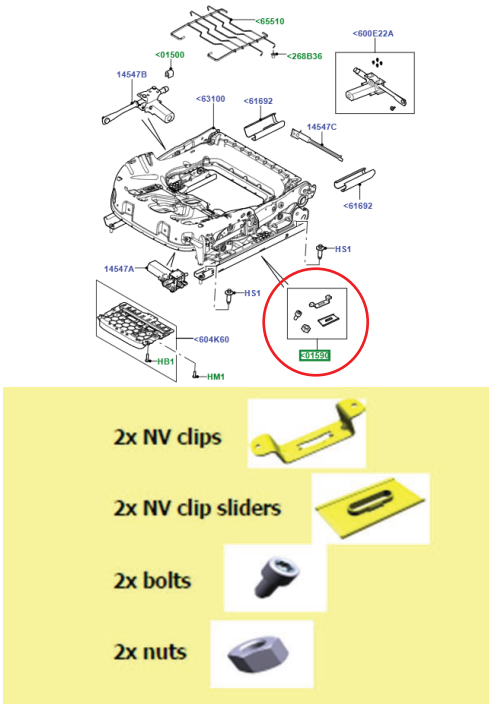Seat Cushion Pan Service Kit Available as Lower Level Assembly	17MY-Onwards Range Rover, RR Sport, XF, F-TYPE 15-19MY RR Evoque, 11-20MY XJ
Customer Voice: – A customer may report a rattle tyle noise from the front seat base area. Technical Description: – This may be caused by a seat pan bracket. Status: – A front seat pan service kit has now been released as a lower level service part to allow a repair to be done in the vehicle without separating the seat cushion from the seat squab. – Please refer to the Electronic Parts Catalog (EPC) with the VIN for the correct lower level assembly part number should diagnosis of a customer concern identify a seat pan bracket concern. – The replacement procedure has been added to the Workshop Manual, section 501-10: Seating > General Procedures > Front Row Seat Pan Bracket.