Field campaign

Topic	New Continental GTC - Header flap - Cord replacement (SC21/24)
Market area	Russische Föderation (5RU),Australia E04 Bentley rest Asia and Australia (6E04),China 796 VW Import Comp. Ltd (Vico), Beijing (6796),Germany E02 Bentley rest Europe (6E02),Japan E03 Bentley Japan (6E03),United Arab Emirates E06 Bentley Middle East and Africa (6E06),United Kingdom E01 Bentley UK (6E01),United States E05 Bentley USA and rest America (6E05)
Brand	Bentley
Transaction No.	2063926/2
Campaign number	EC06
Note	
Type	
US code	

Vehicle data

New Continental GTC

Sales types

Type	MY	Brand	Designation	Engine code	Gearbox code	Final drive code
3S4*	2019	E		*	*	*
3S4*	2020	E		*	*	*

Chas is numbers

Manufacturer	Filler	Type	Filler	MY	Factory	From	To	Prod from	Prod to
SCB	*	*	*	*	C	064922	076460		

Documents

Document name
master.xml
headertrim.pdf
sc2124vinlist.pdf

Notes

. Repair instructions

Technical background

The right and left hand convertible header flaps are operated by individual cords

A small batch of header flap cords were manufactured out of specification (to short)

During operation, the out of specification cords pull against the eyelet, this can result in damaged/broken eyelets (Figure 1) the cord then becomes detached from the flap, resulting in a clash condition between the flap and the top of the header trim panel

Figure 1

.

PLEASE NOTE: In the event that TPI 2060120/ - has been previously conducted using (Header flap kit 3SD 871 261A plus colour code)

Or

The cord kit 3SD 871 261C has been previously fitted

Or

The front trim panel 3SD 871 261 (plus colour code) has been previously fitted No

further action is required.

The operative should submit a Warranty claim via SAGA for a total of 10 Time units, this will ensure the VIN is removed from the applicability list please also place a yellow paint completion mark on the inner face of the left hand header trim flap see Identification section

Remedy

- The right and left hand header trim eyelets (Figure 2) require checking for any signs of damage/wear as described in Section 1 of the Work section

Figure 2

▪

NOTE: Should no signs of damage/wear be found on the right and left hand eyelets, only the right and left hand cords should be replaced as described in Section 1

However

In the event that wear/damage is evident, the right and left hand header flaps must be replaced as described in Section 2

Please note: The right and left hand header flap kits contain all of the required parts

Customer notification

Customers do not need to be informed directly of this campaign. Please ensure that all affected vehicles are checked and repaired at the nearest opportunity or during a service visit. You should also inform your new and used car sales departments so that the vehicles affected can be checked and, if necessary, repaired immediately (not just before sale)

Warranty accounting instructions

Inspection of the right and left hand eyelets including right and left hand cord replacement (Section 1)

Warranty type 710 or 790

Labour operation code 61 92 01 00

Damage service number EC06

Damage code 00 66

Time 20 Time units

Criteria ID 01

Header trim removed and refitted (Section 2 only)

Labour Operation Code 61 21 19 01

Time 30 Time units

Inspection of the right and left hand eyelets including flap assembly replacement - (Section 2 only)

Labour Operation Code 61 92 56 50

Time 20 TU

Genuine parts

▪

IMPORTANT: The retailer should pre order x1 cord kit to ensure the parts have arrived before the vehicle arrives at the applicable retailer

The required replacement parts should be ordered from Bentley Motors Limited Crewe or through your regional Bentley parts distribution centre

Parts supply

Part Number	Description	Quantity

3SD 871 261C	Header flap cord kit	1 (Section 1 only) x1 kit = 2 cords and 2 rivets
3SD 871 261A (Plus colour code) Refer to ETKA using the applicable VIN	Header flap kit (right and left hand side)	1 (Section 2 only)

Parts despatch control

Not applicable

Repair instructions

. Notes

Technical background

The right and left hand convertible header flaps are operated by individual cords

A small batch of header flap cords were manufactured out of specification (to short)

During operation, the out of specification cords pull against the eyelet, this can result in damaged/broken eyelets (Figure 1) the cord then becomes detached from the flap, resulting in a clash condition between the flap and the top of the header trim panel

Figure 1

.

PLEASE NOTE: In the event that TPI 2060120/ - has been previously conducted using (Header flap kit 3SD 871 261A plus colour code)

Or

The cord kit 3SD 871 261C has been previously fitted

Or

The front trim panel 3SD 871 261 (plus colour code) has been previously fitted No

further action is required.

The operative should submit a Warranty claim via SAGA for a total of 10 Time units, this will ensure the VIN is removed from the applicability list please also place a yellow paint completion mark on the inner face of the left hand header trim flap see Identification section

Check

If the vehicle is not already listed as repaired in 'Repair history' (in Elsa Pro) check the vehicle has the yellow paint mark on the inner face of the left hand header trim flap (see Identification section)

In the event the campaign has not been applied, please carry out the required work in accordance with these instructions

Genuine parts

▪

IMPORTANT: The retailer should pre order x1 cord kit to ensure the parts have arrived before the vehicle arrives at the applicable retailer

The required replacement parts should be ordered from Bentley Motors Limited Crewe or through your regional Bentley parts distribution centre

Work

▪

VERY IMPORTANT: Before conducting this procedure the Operative must observe and familiarise themselves with Rep.Gr 61 - Convertible hood assembly - safety precautions

CAUTION: The instructions within Rep.Gr 61 must be strictly adhered to

IMPORTANT: The operative MUST ensure all trim and applicable components are suitably protected, any damage to trim or components will not be considered for Warranty payment

Inspection - All vehicles

1) Referring to Rep.Gr 61 - Manoeuvre the hood to the service position

▪

IMPORTANT: The next part of the procedure requires the use of a drill and drill bit to remove the rivet head from the second upright linkage - Do not attempt to completely drill out the rivet from the linkage, the operative must only use the drill to remove the rivet head, a suitable drift should then be used to remove the remaining part of the rivet from the linkage

Hint: A short video is also available to view on the Bentley hub regarding cord replacement reference - EC06 (21/24)

- The operative must ensure that when removing the rivet head that all trim is protected
- Ensure the drill or drill bit does not contact any of the trim or hood components. Figure 3 (circled) shows a potential clash condition between the drill and headliner whilst drilling off the rivet head

Figure 3

- IMPORTANT: The operative MUST ensure all trim and applicable components are suitably protected, any damage to trim or components will not be considered for Warranty payment

2) Referring to Figure 4 - Using a 3.4 mm drill bit, remove the rivet head from the second upright linkage

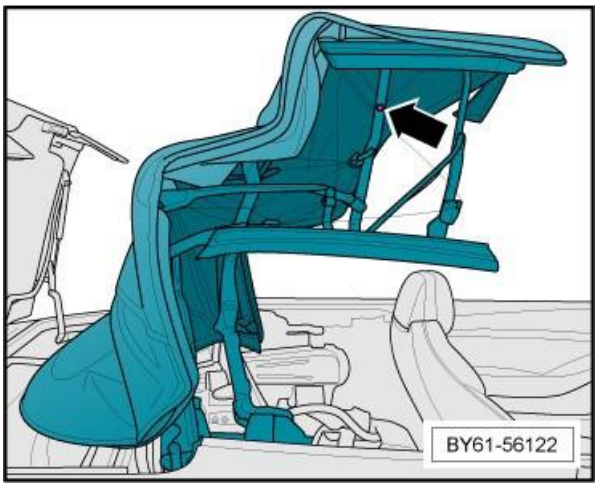

Figure 4

3) Referring to Figure 5 - Use a suitable drift/hammer to remove the remaining part of the rivet from the linkage

NOTE: The cord and tape should now be free

Figure 5

4) Referring to Figure 6 - With extreme care to ensure no damage is caused to any trim or components - Using a sharp blade (e.g Stanley knife) or sharp trim scissors - Cut the cord at the location shown

Figure 6

5) Referring to Figure 7 - Note the routing of the cord to aid installation - Remove the cord as follows:

- Pull/thread the cord out through the primary redirector (A)
- Pull/thread the cord out through the secondary redirector (B)
- Pull/thread the cord out through the flap eyelet (C)

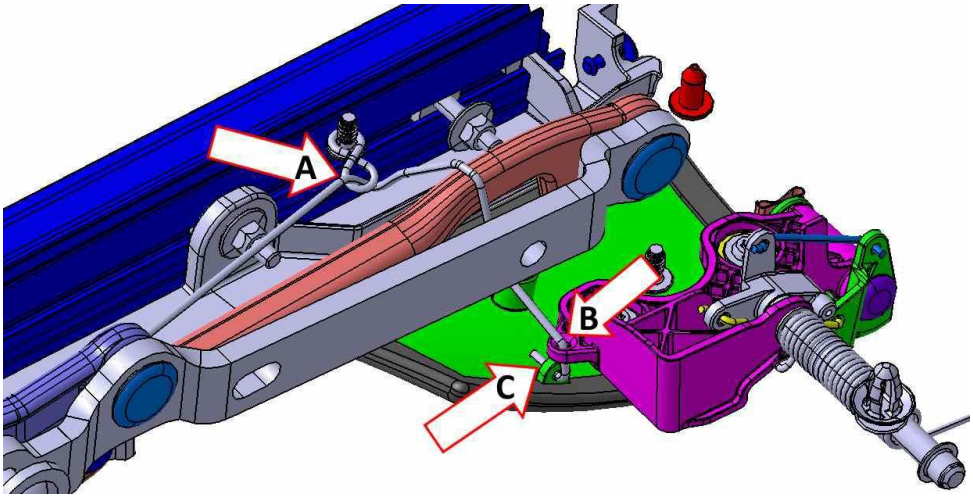

Figure 7

6) Referring to Figure 8 - Inspect the eyelet for any wear/damage

Figure 8

7) Repeat steps 2 through to 6 on the opposite side of the vehicle

▪

VERY IMPORTANT: In the event that no significant damage/wear is evident on the right and left hand eyelets that could lead to eyelet failure the operative should conduct Section 1 and replace the right and left hand cords

Or

In the event that one or both eyelets have signs of wear which could lead to the eyelet failure, the operative must conduct Section 2 to replace the right and left hand header trim panel flaps

Section 1 - Header flap cord kit replacement

1) Referring to Figure 9

- Feed the new cord through the primary redirector (A)
- Feed the new cord through the secondary redirector (B)
- Feed the new cord through the flap eyelet (C)

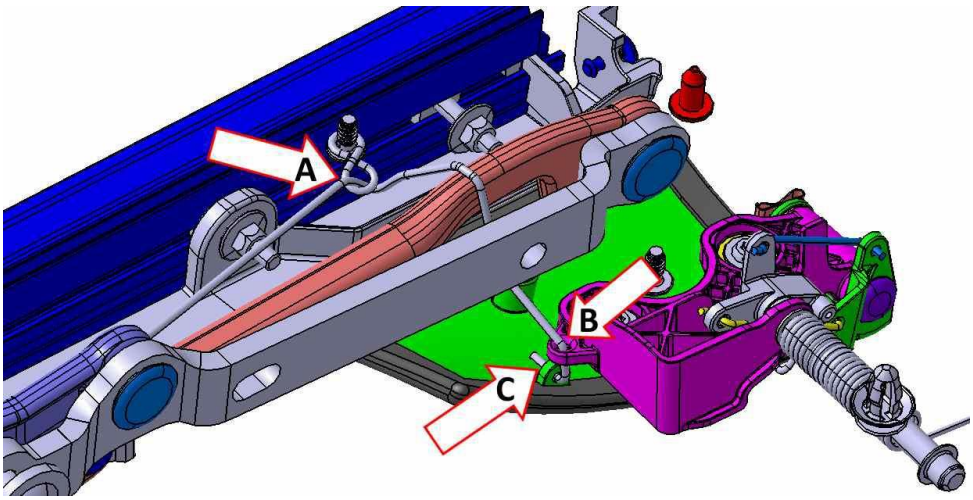

Figure 9

2) Referring to Figure 10 - Using suitable flat-nose pliers, tighten the knot by pulling the cord

▪

The knot (once securely tied) must be below the white dot (Figure 10)

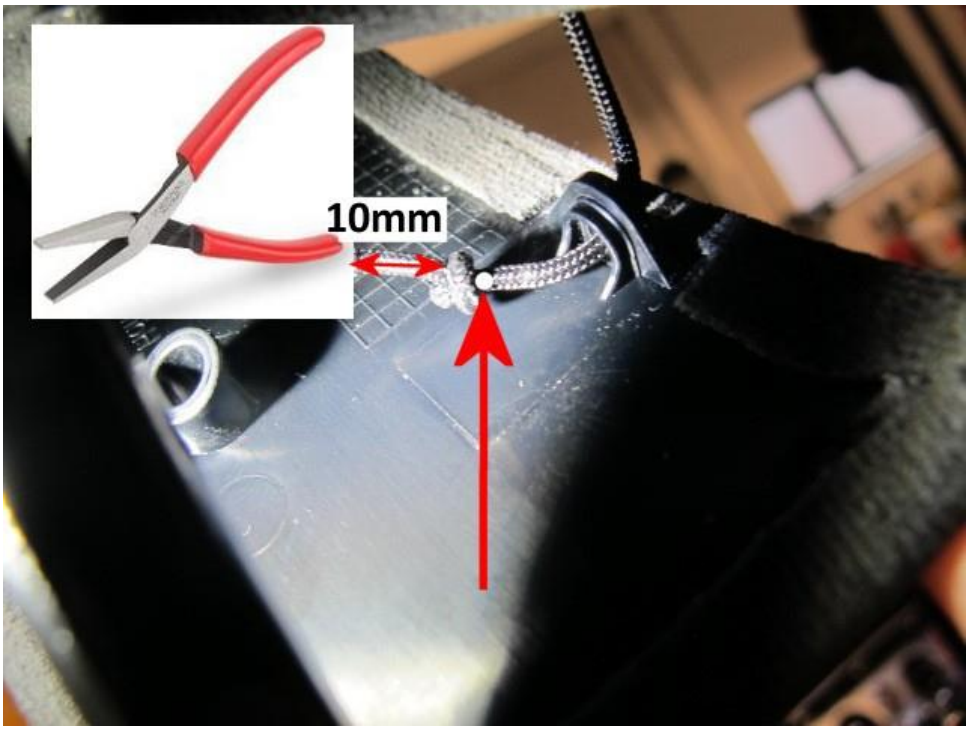

Figure 10

- With extreme care to ensure no damage is caused to any trim or components - Use a sharp blade (e.g Stanley knife) or very sharp trim scissors (to minimise fraying) - Cut the cord at the location shown, leaving 10mm below the knot

3) Conduct the rivet procedure as follows:

- Referring to Figure 11 - When riveting the cord -1- and tape -2- to the second upright linkage, use the rivet provided within the kit (Arrow)
- Place the cord loop -1- and the tape -2- onto the rivet, and ensure that the cord is in an upright position before riveting

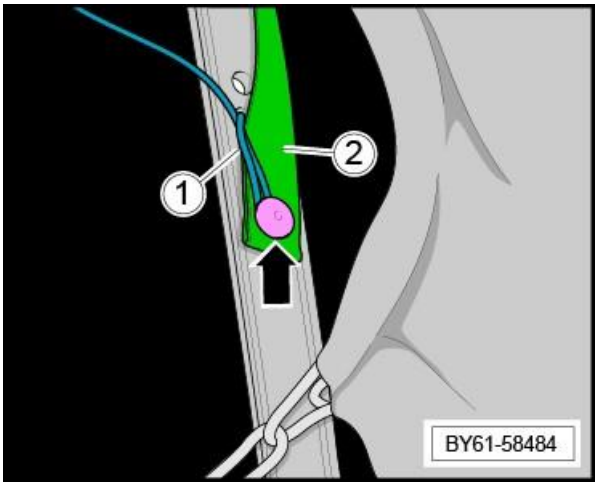

Figure 6

4) Repeat steps – 1,2 and 3 on the opposing side

- Remove the hood from the Service position
- Check to confirm the roof opens and closes to specification including the correct operation of the header flaps

5) Place a yellow paint completion mark on the inner face of the left hand header trim flap see Identification section

Section 2 - Header trim panel flap replacement

1) Referring to Rep.Gr 61 - Replace the right and left hand header trim flaps *NOTE: Replacement cords are pre fitted to the new header trim flap panels*

- Remove the hood from the Service position
- Check to confirm the roof opens and closes to specification including the correct operation of the header flaps

▪

In the event the header trim panel procedure is not visible for the applicable VIN please refer to the attached instruction document (PDF)

2) Place a yellow paint completion mark on the inner face of the left hand header trim flap see Identification section

Identification

Yellow paint mark on the inner face of the left hand header trim flap

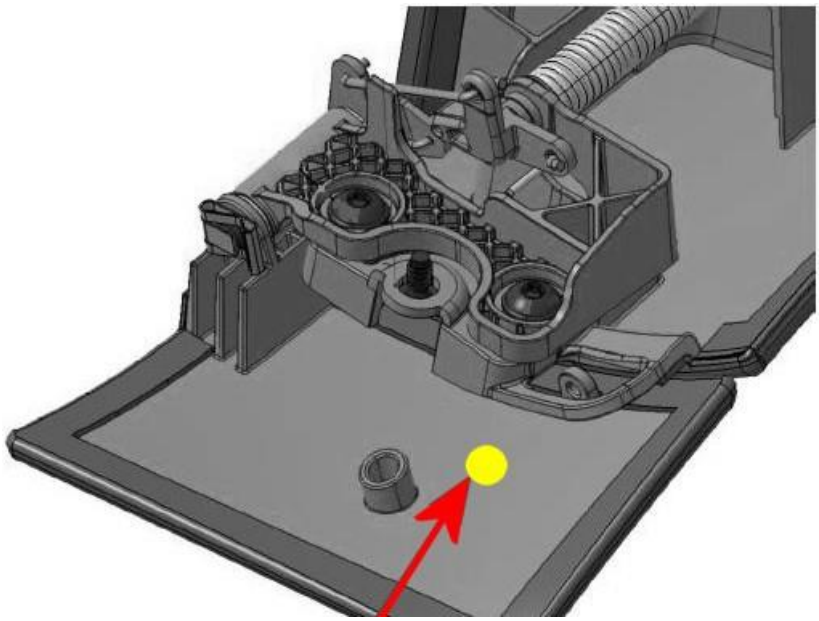

. Repair instructions . Notes

General Information

The header trim panel must be removed in order to remove the header trim panel flaps.

Special tools and workshop equipment required

- None

Torque tightening values

Unless otherwise shown, standard torque values apply. ⇒ /BAS/After Sales Publication/Body/00 - Technical data, Materials

Single use items

Within this procedure there are single use items which must be replaced and not reused. Ensure that new replacements are available prior to starting this procedure.

Removal

– Remove the header trim panel. Refer to “Convertible hood header trim panel - To remove and fit”. ⇒/BAS/After Sales Publication/Body/61 - Convertible top, Hardtop, Canopy

– Place the header trim panel onto a protected surface.

– Remove and dispose of the 2 fixings **-arrowed-**, (3.5 Nm).

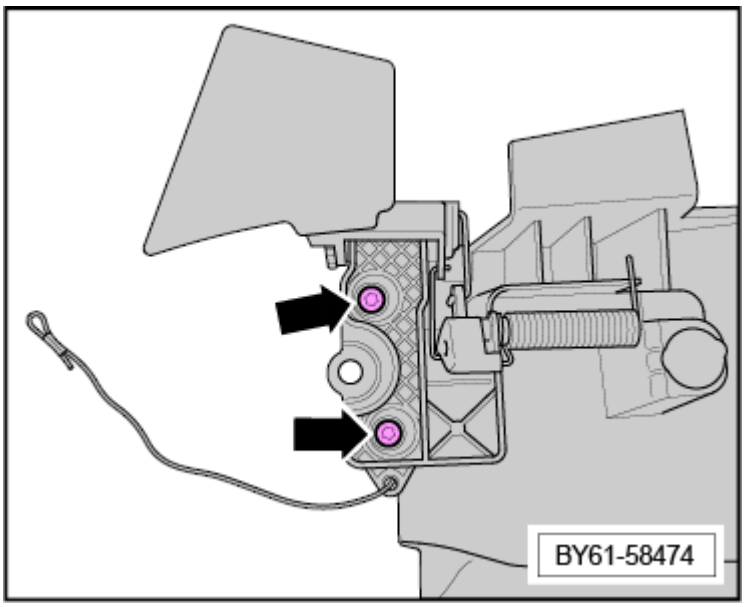

– Raise the torsion spring leg **-1-**, and slide the flap assembly **-2-** outwards, off the trim panel **-3-**.

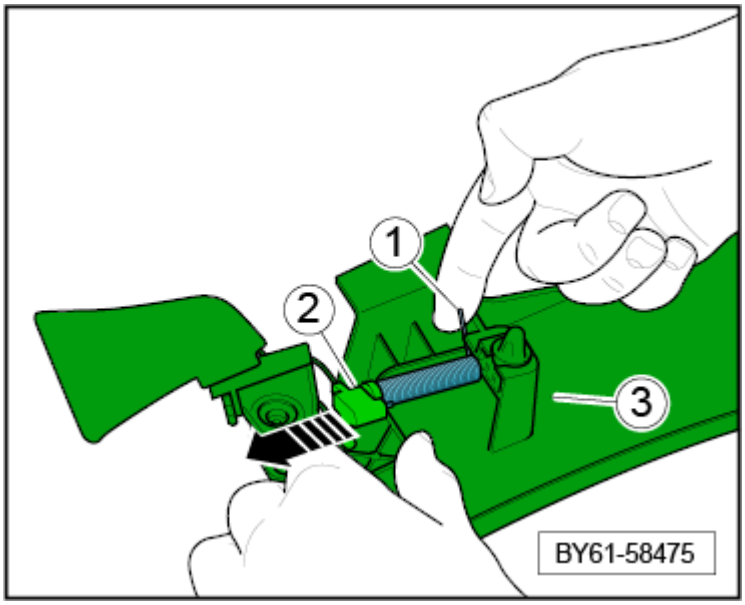

Note

Ensure that the bushing **-1-** *remains in place in the header trim panel* **-2-**.

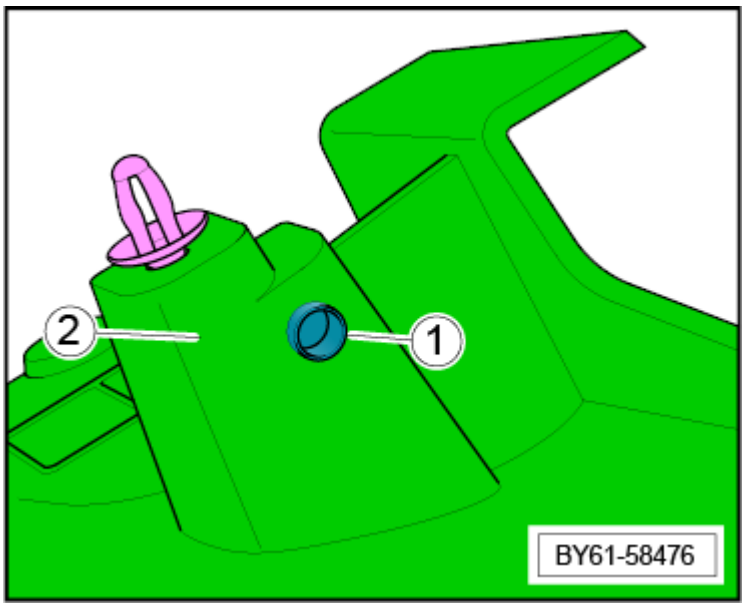

– If replacing the header trim panel flap assembly and re-using the torsion spring, remove the torsion spring **-1-** by sliding it off the shaft **-2-**.

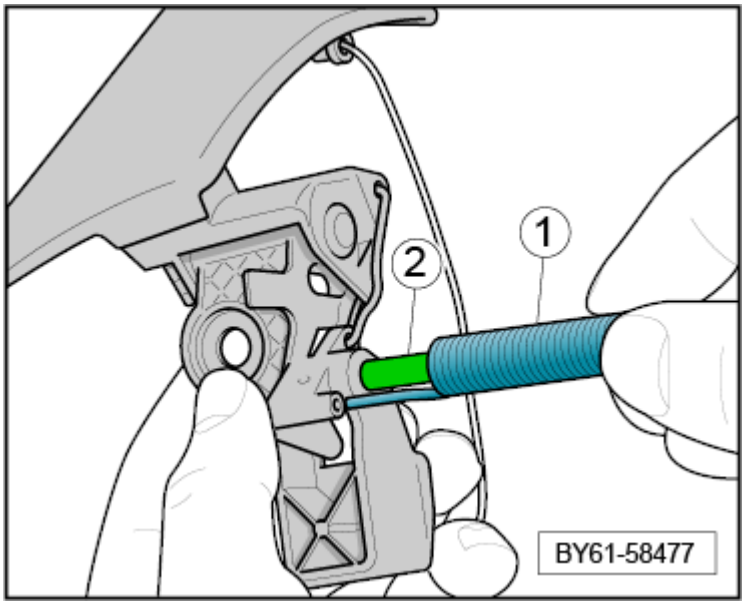

Installation

Installation is the reverse of removal procedure, noting the following:

– If it has been removed, refit the torsion spring to the shaft, ensuring that the leg **-1-** locates fully in the hole **-2-**.

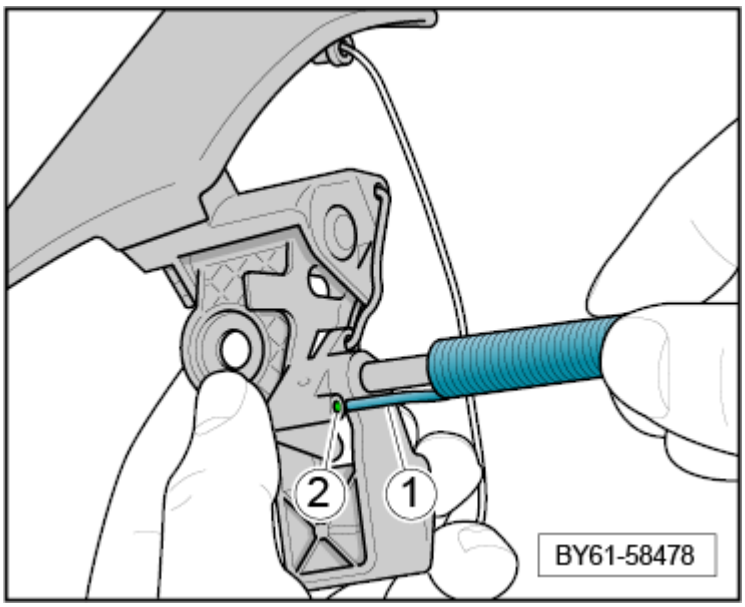

– Pull the torsion spring leg **-1-** upwards slightly, check that the bushing **-3-** is in place, and insert the shaft **-4-** into the bushing.

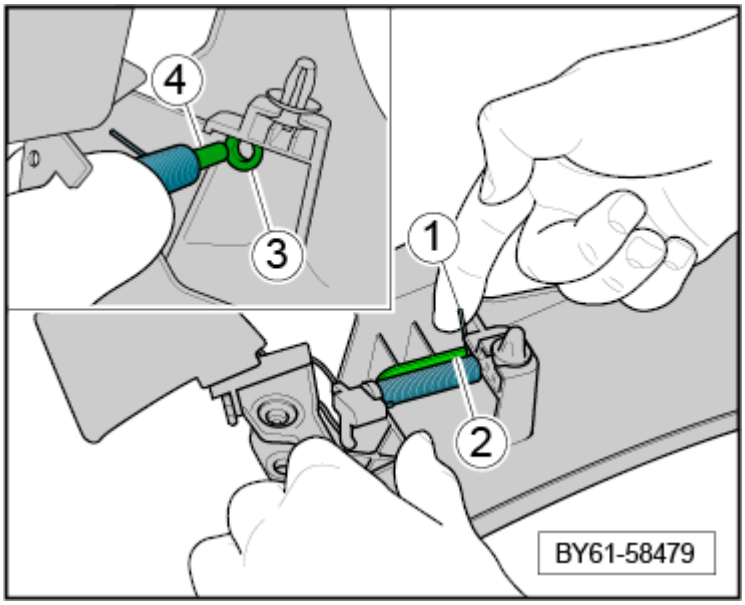

– Gently release the torsion spring leg so that it sits on the “rib” **-2-** of the header trim panel.

Note

Ensure that both torsion spring legs are correctly located.

– Place the 2 washers **-arrowed-**, into position between the

header trim panel flap assembly **-1-** and the header trim panel **-2-**, and using 2 new fixings, loosely assemble the flap assembly to the header trim panel.

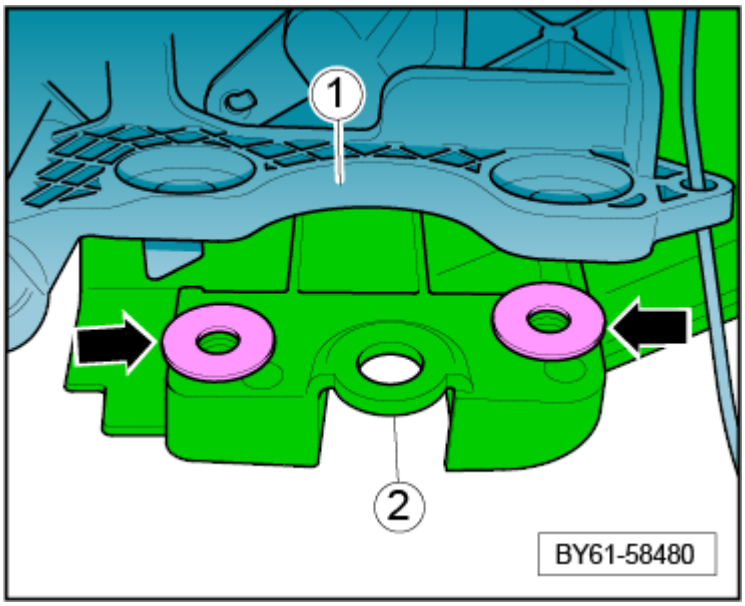

Note

Do not tighten the fixings at this point.

– Align the flap assembly to the header trim panel, ensuring that the edges **-1-** of the two panels align, and that the gap **-arrowed-** between the two panels is 2.5mm (+0.5/-1.5) and consistent along the whole length .

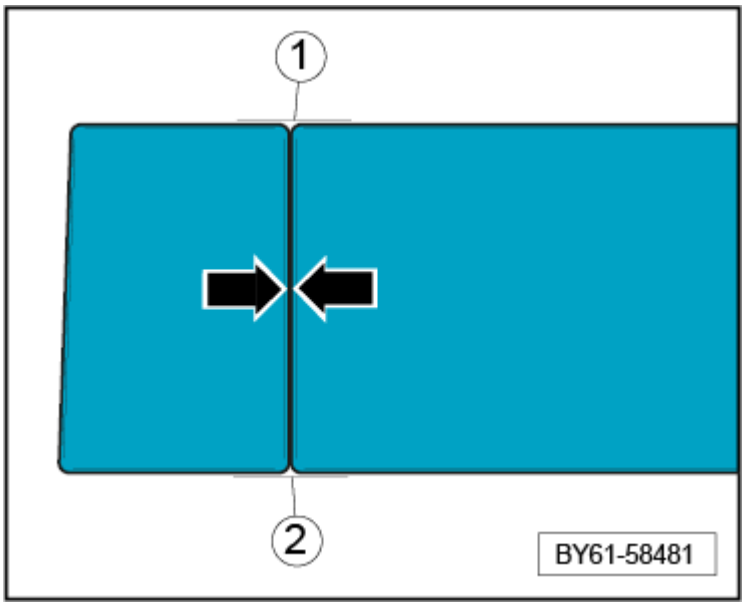

Caution

Misalignment of the panels can cause damage to both the header trim panel and the header trim panel flap assembly.

– Torque tighten the fixings **-arrowed-**.

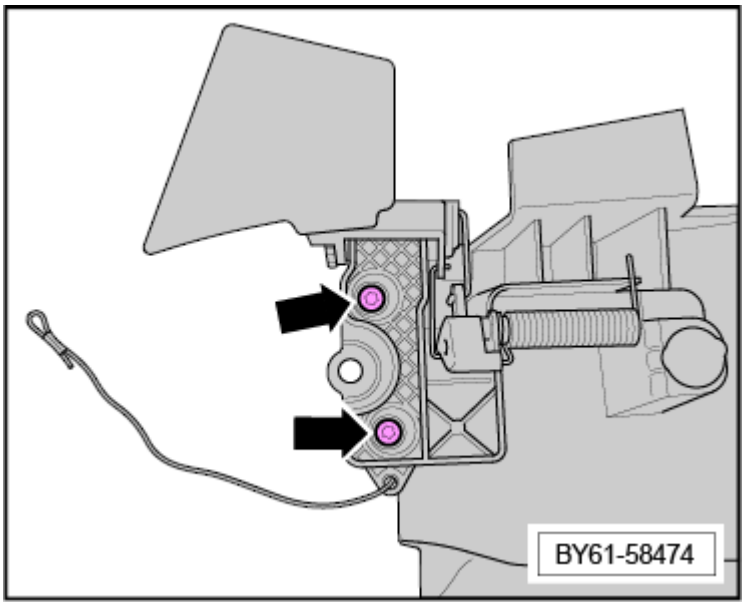

– Open and close the convertible roof, and check that the gap between the header trim panel flap assembly and the header trim panel are within the tolerance specified above. Adjust if necessary.

2019 Model Year

SCBDA33SXKC064922	SCBDD33S5KC072935	SCBDD33S1KC073404	SCBDD33S4KC073669	SCBDD33S4KC073848
SCBDB4ZG9KC064934	SCBDA33S8KC072937	SCBDD33S9KC073408	SCBDD33S6KC073673	SCBDD33S6KC073849
SCBDE33SXKC066559	SCBDD33S4KC072943	SCBDD33S7KC073410	SCBDA33S9KC073675	SCBDD33S2KC073850
SCBDD33S9KC069147	SCBDD33S8KC072945	SCBDD33S0KC073412	SCBDD33S7KC073679	SCBDD33S6KC073852
SCBDB4ZG8KC069171	SCBDD33S3KC072948	SCBDA33S3KC073414	SCBDD33S5KC073681	SCBDD33S8KC073853
SCBDE33S3KC069237	SCBDD33S1KC072950	SCBDD33S1KC073418	SCBDD33S9KC073683	SCBDD33S3KC073856
SCBDB4ZG3KC069238	SCBDA33S4KC072952	SCBDD33SXKC073420	SCBDD33S7KC073696	SCBDD33S9KC073859
SCBDD33SXKC069240	SCBDA33S4KC072997	SCBDD33S3KC073422	SCBDD33S0KC073698	SCBDD33S5KC073860
SCBDD33S6KC071258	SCBDD33S4KC073042	SCBDD33S0KC073426	SCBDD33S5KC073700	SCBDD33S9KC073862
SCBDE33S0KC071446	SCBDD33S5KC073048	SCBDD33S4KC073428	SCBDD33S9KC073702	SCBDD33S0KC073863
SCBDD33S9KC071447	SCBDD33S7KC073052	SCBDA33S5KC073432	SCBDD33S6KC073706	SCBDD33SXKC073868
SCBDD33SXKC071537	SCBDD33S0KC073054	SCBDD33SXKC073434	SCBDD33SXKC073708	SCBDD33S0KC073877
SCBDD33S8KC072119	SCBDD33S4KC073056	SCBDD33S3KC073436	SCBDD33S8KC073710	SCBDD33S2KC073878
SCBDD33SXKC072137	SCBDD33S8KC073058	SCBDD33S9KC073442	SCBDD33S1KC073712	SCBDD33S4KC073882
SCBDD33S1KC072155	SCBDD33S9KC073070	SCBDD33S2KC073444	SCBDD33S5KC073714	SCBDD33S6KC073883
SCBDD33S3KC072156	SCBDA3ZGXKC073073	SCBDD33S1KC073449	SCBDD33S2KC073718	SCBDD33SXKC073885
SCBDD33S7KC072175	SCBDD33S3KC073081	SCBDD33S3KC073453	SCBDD33S0KC073720	SCBDD33S1KC073886
SCBDD33S9KC072176	SCBDD33S9KC073084	SCBDD33S4KC073459	SCBDA33S3KC073722	SCBDD33S3KC073887
SCBDD33S0KC072213	SCBDD33S4KC073087	SCBDD33S5KC073471	SCBDD33S8KC073724	SCBDD33S7KC073889
SCBDD33SXKC072249	SCBDD33S8KC073089	SCBDD33S2KC073475	SCBDD33S5KC073728	SCBDD33S3KC073890
SCBDD33S3KC072318	SCBDA33S2KC073095	SCBDD33SXKC073479	SCBDD33S7KC073729	SCBDD33S9KC073893
SCBDD33S5KC072336	SCBDD33S9KC073098	SCBDD33S1KC073483	SCBDD33S7KC073732	SCBDD33S0KC073894
SCBDD33S2KC072472	SCBDD33S9KC073103	SCBDD33SXKC073501	SCBDD33S9KC073733	SCBDD33S6KC073897
SCBDD33S6KC072569	SCBDD33S6KC073110	SCBDD33S7KC073505	SCBDD33S2KC073735	SCBDD33S2KC073900
SCBDD33S2KC072584	SCBDD33SXKC073112	SCBDD33S0KC073507	SCBDD33S4KC073736	SCBDC33S0KC073901
SCBDD33S6KC072586	SCBDD33S9KC073117	SCBDD33S4KC073509	SCBDD33S8KC073738	SCBDA33S7KC073903
SCBDD33SXKC072588	SCBDD33S2KC073122	SCBDD33S2KC073511	SCBDD33S8KC073741	SCBDD33S1KC073905
SCBDD33S9KC072601	SCBDD33S5KC073129	SCBDD33S3KC073517	SCBDA33S2KC073744	SCBDD33S7KC073911
SCBDD33S6KC072605	SCBDD33SXKC073143	SCBDD33S7KC073519	SCBDD33S5KC073745	SCBDD33S0KC073913
SCBDD33S4KC072618	SCBDD33S9KC073148	SCBDD33S5KC073521	SCBDD33S9KC073747	SCBDD33S1KC073919
SCBDD33S2KC072620	SCBDD33S4KC073154	SCBDD33S9KC073523	SCBDD33S0KC073748	SCBDD33S9KC073926
SCBDD33S6KC072622	SCBDD33SXKC073157	SCBDD33S1KC073547	SCBDD33S9KC073750	SCBDD33S4KC073929
SCBDD33SXKC072624	SCBDD33S3KC073159	SCBDD33S5KC073549	SCBDD33S0KC073751	SCBDD33S2KC073931
SCBDD33S8KC072637	SCBDD33S8KC073173	SCBDD33S3KC073551	SCBDD33S6KC073754	SCBDA33S5KC073933
SCBDD33S1KC072639	SCBDA33S2KC073176	SCBDD33S7KC073553	SCBDD33S8KC073755	SCBDA33S4KC073938
SCBDD33SXKC072641	SCBDA3ZG3KC073190	SCBDD33S0KC073555	SCBDD33S1KC073757	SCBDA33S3KC073946
SCBDD33S1KC072656	SCBDD33S0KC073197	SCBDD33S4KC073557	SCBDD33S1KC073760	SCBDD33SXKC073949
SCBDD33S5KC072658	SCBDD33S4KC073199	SCBDD33S8KC073559	SCBDD33S3KC073761	SCBDD33S7KC073956
SCBDD33SXKC072686	SCBDD33S1KC073211	SCBDD33S6KC073561	SCBDD33S7KC073763	SCBDD33SXKC073966
SCBDD33S3KC072688	SCBDD33S9KC073215	SCBDD33SXKC073563	SCBDD33S9KC073764	SCBDD33S1KC073970
SCBDD33S1KC072690	SCBDA33S6KC073228	SCBDD33S9KC073568	SCBDA33S1KC073766	SCBDD33S5KC073972
SCBDD33SXKC072705	SCBDD33S6KC073253	SCBDD33S7KC073570	SCBDD33S4KC073767	SCBDD33S9KC073974
SCBDD33S3KC072707	SCBDD33S1KC073256	SCBDD33S0KC073572	SCBDD33S8KC073769	SCBDD33S0KC073975
SCBDD33S9KC072713	SCBDD33SXKC073272	SCBDD33S6KC073589	SCBDD33SXKC073773	SCBDD33S4KC073977
SCBDD33S1KC072723	SCBDD33S3KC073291	SCBDD33S4KC073591	SCBDD33S3KC073775	SCBDD33S8KC073979
SCBDD33S4KC072733	SCBDC33S3KC073293	SCBDD33S8KC073593	SCBDD33S5KC073776	SCBDA33S5KC073981
SCBDD33S8KC072735	SCBDD33S0KC073295	SCBDD33S1KC073595	SCBDD33S9KC073778	SCBDD33S3KC073985
SCBDD33S1KC072737	SCBDD33S4KC073297	SCBDD33S5KC073597	SCBDD33S0KC073782	SCBDD33S9KC073988
SCBDD33S5KC072739	SCBDD33S8KC073299	SCBDD33S9KC073599	SCBDD33S4KC073784	SCBDD33S9KC073991
SCBDD33S3KC072741	SCBDD33S2KC073301	SCBDD33S3KC073601	SCBDA33S9KC073790	SCBDD33S0KC073992
SCBDD33S7KC072743	SCBDD33S7KC073309	SCBDD33S7KC073603	SCBDD33S0KC073796	SCBDD33S4KC073994
SCBDD33S0KC072745	SCBDD33S5KC073311	SCBDD33S0KC073605	SCBDD33S4KC073798	SCBDC33S2KC073995
SCBDD33S4KC072747	SCBDD33S0KC073314	SCBDD33S4KC073607	SCBDD33S9KC073800	SCBDD33S4KC074000
SCBDA33S7KC072749	SCBDD33S6KC073317	SCBDD33S8KC073609	SCBDD33S2KC073802	SCBDD33S8KC074002
SCBDD33S6KC072751	SCBDD33S8KC073321	SCBDD33S6KC073611	SCBDD33S2KC073816	SCBDD33S3KC074005
SCBDD33S5KC072756	SCBDC33S8KC073323	SCBDD33SXKC073613	SCBDD33S6KC073818	SCBDA3ZG2KC074007
SCBDD33S9KC072758	SCBDD33S5KC073325	SCBDD33S3KC073615	SCBDD33S6KC073821	SCBDD33S9KC074008
SCBDA33SXKC072762	SCBDD33S2KC073329	SCBDA33S6KC073617	SCBDD33S8KC073822	SCBDD33S7KC074010
SCBDD33S7KC072774	SCBDA33SXKC073331	SCBDD33S0KC073619	SCBDD33S5KC073826	SCBDD33S2KC074013
SCBDD33S8KC072797	SCBDA33S3KC073333	SCBDD33S8KC073626	SCBDA33S6KC073827	SCBDD33SXKC074017
SCBDD33S1KC072799	SCBDD33S7KC073343	SCBDD33SXKC073630	SCBDD33S9KC073828	SCBDD33S8KC074033
SCBDA33S5KC072801	SCBDA3ZG2KC073357	SCBDD33S3KC073632	SCBDD33S7KC073830	SCBDD33SXKC074034
SCBDD33SXKC072803	SCBDD33S0KC073359	SCBDD33S7KC073634	SCBDD33S9KC073831	SCBDA33S2KC074036
SCBDD33S3KC072805	SCBDA33S5KC073379	SCBDA33S1KC073637	SCBDD33S2KC073833	SCBDD33S9KC074039
SCBDD33S7KC072807	SCBDA3ZGXKC073381	SCBDA33S5KC073639	SCBDD33S4KC073834	SCBDD33S5KC074040
SCBDD33S0KC072809	SCBDA33S7KC073383	SCBDD33S1KC073645	SCBDD33S8KC073836	SCBDA33SXKC074043
SCBDD33S2KC072813	SCBDD33S1KC073385	SCBDD33S5KC073647	SCBDD33S1KC073838	SCBDD33SXKC074048
SCBDD33S2KC072892	SCBDD33S9KC073389	SCBDD33S9KC073649	SCBDD33SXKC073840	SCBDD33S8KC074050
SCBDA33S5KC072894	SCBDD33S7KC073391	SCBDA33S6KC073651	SCBDD33S1KC073841	SCBDD33S3KC074067
SCBDD33SXKC072896	SCBDC33S0KC073395	SCBDD33S1KC073659	SCBDD33S3KC073842	SCBDD33S2KC074089
SCBDD33S3KC072898	SCBDD33S8KC073397	SCBDD33S3KC073663	SCBDA3ZG4KC073845	SCBDD33S0KC074091

SCBDD33S0KC074124
SCBDD33S8KC074193
SCBDD33S3KC074196
SCBDD33S9KC074199
SCBDD33S5KC074202
SCBDD33S0KC074205
SCBDD33S4KC074210
SCBDD33S1KC074214
SCBDD33S0KC074219
SCBDD33S1KC074231
SCBDA33S8KC074235
SCBDD33S4KC074238
SCBDD33S2KC074240
SCBDD33S4KC074241
SCBDA33S0KC074245
SCBDD33S5KC074247
SCBDD33S7KC074248
SCBDA33S3KC074255
SCBDD33S8KC074257
SCBDD33S8KC074260
SCBDD33S1KC074262
SCBDD33S3KC074263
SCBDD33S5KC074264
SCBDD33S0KC074270
SCBDA33S5KC074273
SCBDA33S9KC074275
SCBDD33S3KC074277
SCBDD33S7KC074279
SCBDD33S0KC074284
SCBDD33S2KC074285
SCBDD33S4KC074286
SCBDD33S8KC074288
SCBDD33S6KC074290
SCBDD33S8KC074291
SCBDA33S2KC074294
SCBDD33S5KC074295
SCBDD33S9KC074297
SCBDD33S5KC074300
SCBDA33S1KC074304
SCBDA33S3KC074305
SCBDD33S6KC074306
SCBDD33S8KC074307
SCBDD33S8KC074310
SCBDD33S1KC074312
SCBDD33S3KC074313
SCBDD33S5KC074314
SCBDA33S8KC074316
SCBDD33S0KC074317
SCBDD33S2KC074318
SCBDD33S2KC074321
SCBDA33S3KC074322
SCBDA33S5KC074323
SCBDD33S1KC074326
SCBDD33S3KC074327
SCBDD33S5KC074328
SCBDD33S7KC074329
SCBDA33S6KC074332
SCBDD33S6KC074337
SCBDD33S8KC074338
SCBDD33SXKC074339
SCBDD33S6KC074340
SCBDD33S8KC074341
SCBDD33S5KC074345
SCBDA33S1KC074349
SCBDD33S4KC074353
SCBDD33S6KC074354
SCBDD33S8KC074355
SCBDA33S9KC074356
SCBDS33S6KC074358
SCBDD33S1KC074360
SCBDD33S3KC074361
SCBDS33SXKC074363
SCBDA33S8KC074364
SCBDD33S2KC074366
SCBDD33S4KC074370
SCBDS33S0KC074372
SCBDD33S1KC074374
SCBDS33SXKC074377
SCBDD33S9KC074378
SCBDD33S9KC074395
SCBDA33S1KC074397
SCBDS33S3KC074401
SCBDS33S7KC074403
SCBDA33S7KC074405
SCBDS33S6KC074408
SCBDS33S8KC074409
SCBDS33S6KC074411
SCBDD33S9KC074414
SCBDD33S2KC074416
SCBDS33S0KC074422
SCBDS33S4KC074424
SCBDS33S8KC074426
SCBDS33S1KC074428
SCBDS33SXKC074430
SCBDD33S9KC074431
SCBDS33S3KC074432
SCBDS33S9KC074435
SCBDS33S0KC074436
SCBDS33S2KC074437
SCBDS33S4KC074438
SCBDS33S6KC074442
SCBDS33SXKC074444
SCBDD33S9KC074445
SCBDS33S3KC074446
SCBDS33S5KC074447
SCBDS33S7KC074448
SCBDA3ZG1KC074449
SCBDS33S5KC074450
SCBDS33S7KC074451
SCBDS33S9KC074452
SCBDS33S2KC074454
SCBDS33S4KC074455
SCBDS33S1KC074459
SCBDS33S3KC074463
SCBDS33S7KC074465
SCBDD33S6KC074466
SCBDS33S0KC074467
SCBDS33S2KC074468
SCBDS33S4KC074469
SCBDS33S2KC074471
SCBDS33S4KC074472
SCBDA33S4KC074474
SCBDS33SXKC074475
SCBDS33S3KC074477
SCBDS33S5KC074478
SCBDA33S3KC074479
SCBDS33S3KC074480
SCBDS33S5KC074481
SCBDS33S0KC074484
SCBDS33S2KC074485
SCBDD33S3KC074487
SCBDA3ZG0KC074488
SCBDS33S6KC074490
SCBDD33S7KC074492
SCBDS33S3KC074494
SCBDA33S7KC074503
SCBDS33S8KC074507
SCBDS33S1KC074509
SCBDS33S3KC074513
SCBDS33S7KC074515
SCBDS33S4KC074519
SCBDD33SXKC074521
SCBDS33S5KC074528
SCBDS33S7KC074529
SCBDS33S3KC074530
SCBDS33S9KC074533
SCBDS33S0KC074534
SCBDS33S2KC074535
SCBDA33S2KC074537
SCBDS33S8KC074538
SCBDS33S6KC074540
SCBDS33S8KC074541
SCBDS33S1KC074543
SCBDS33S3KC074544
SCBDS33S5KC074545
SCBDS33S0KC074548
SCBDS33S2KC074549
SCBDS33S2KC074552
SCBDS33S4KC074553
SCBDS33S6KC074554
SCBDS33S8KC074555
SCBDS33SXKC074556
SCBDS33S1KC074557
SCBDS33S0KC074565
SCBDS33S2KC074566
SCBDS33S4KC074567
SCBDS33S6KC074568
SCBDS33S4KC074570
SCBDA33S2KC074571
SCBDS33S8KC074572
SCBDS33S3KC074575
SCBDS33S5KC074576
SCBDS33S9KC074578
SCBDS33S7KC074580
SCBDS33S9KC074581
SCBDS33S4KC074584
SCBDS33S6KC074585
SCBDA33S6KC074587
SCBDS33S3KC074589
SCBDS33S1KC074591
SCBDS33S5KC074593
SCBDS33S7KC074594
SCBDS33S9KC074595
SCBDA33S9KC074597
SCBDS33S4KC074598
SCBDS33S9KC074600
SCBDS33S2KC074602
SCBDS33S6KC074604
SCBDS33S2KC074616
SCBDS33S4KC074617
SCBDA3ZG9KC074618
SCBDS33S4KC074620
SCBDS33S6KC074621
SCBDS33S5KC074626
SCBDS33S7KC074627
SCBDS33S0KC074629
SCBDS33S2KC074633
SCBDS33S6KC074635
SCBDA33S5KC074645
SCBDS33S0KC074646
SCBDA33S2KC074666
SCBDA33S4KC074667
SCBDS33S1KC074669
SCBDS33S8KC074670
SCBDA33S6KC074671
SCBDS33S1KC074672
SCBDS33S3KC074673
SCBDA33S7KC074677
SCBDS33S4KC074679
SCBDA33S7KC074680
SCBDS33S2KC074681
SCBDC33SXKC074683
SCBDS33S8KC074684
SCBDS33SXKC074685
SCBDS33S3KC074687
SCBDS33S5KC074688
SCBDS33S7KC074689
SCBDS33S3KC074690
SCBDS33S5KC074691
SCBDS33S9KC074693
SCBDS33S0KC074694
SCBDS33S2KC074695
SCBDA33S0KC074696
SCBDS33S6KC074697
SCBDS33S8KC074698
SCBDA33S6KC074699
SCBDS33S2KC074700
SCBDS33SXKC074704
SCBDS33S3KC074706
SCBDS33S5KC074707
SCBDS33S9KC074709
SCBDS33S9KC074712
SCBDS33S0KC074713
SCBDS33S2KC074714
SCBDS33S4KC074715
SCBDS33S6KC074716
SCBDS33S8KC074717
SCBDA33S6KC074718
SCBDA33S8KC074719
SCBDS33SXKC074721
SCBDS33S4KC074729
SCBDA33S9KC074731
SCBDD33S1KC074732
SCBDA33S2KC074733
SCBDS33S8KC074734
SCBDS33SXKC074735
SCBDS33S1KC074736
SCBDS33S3KC074740
SCBDA33S7KC074744
SCBDS33S4KC074746
SCBDS33S7KC074756
SCBDS33S9KC074757
SCBDS33S0KC074758
SCBDS33S9KC074760
SCBDS33S2KC074762
SCBDS33S4KC074763
SCBDS33S6KC074764
SCBDS33S8KC074782
SCBDS33SXKC074783
SCBDS33S1KC074784
SCBDS33S7KC074787
SCBDS33S9KC074788
SCBDS33S0KC074789
SCBDS33S7KC074790
SCBDS33S9KC074791
SCBDS33S0KC074792
SCBDS33S0KC074808
SCBDA33S7KC074811
SCBDS33S2KC074812
SCBDC33S8KC074813
SCBDS33S6KC074814
SCBDS33S8KC074815
SCBDS33SXKC074816
SCBDS33S1KC074817
SCBDS33S5KC074819
SCBDS33S1KC074820
SCBDS33S3KC074821
SCBDS33S5KC074822
SCBDS33S9KC074824
SCBDS33S0KC074825
SCBDS33S2KC074826
SCBDS33S4KC074827
SCBDA33S5KC074855
SCBDS33S0KC074856
SCBDS33S2KC074857
SCBDS33S6KC074859
SCBDS33S2KC074860
SCBDA33S2KC074862
SCBDA33S6KC074864
SCBDS33S1KC074865
SCBDS33S5KC074867
SCBDS33S7KC074868
SCBDS33S9KC074869
SCBDA33S1KC074870
SCBDS33S7KC074871
SCBDS33S9KC074872
SCBDS33S4KC074875
SCBDS33SXKC074878
SCBDS33S1KC074882
SCBDS33S3KC074883
SCBDS33S7KC074885
SCBDS33S9KC074886
SCBDS33S2KC074888
SCBDS33S4KC074889
SCBDC33SXKC074893
SCBDS33S8KC074894
SCBDS33S5KC074898
SCBDS33SXKC074900
SCBDS33S1KC074901
SCBDS33S5KC074903
SCBDS33S7KC074904
SCBDA33S0KC074908
SCBDS33S6KC074909
SCBDA33S0KC074911
SCBDS33S8KC074913
SCBDS33SXKC074914
SCBDS33S3KC074916
SCBDS33S9KC074919
SCBDA33S3KC074921
SCBDS33S9KC074922
SCBDS33S2KC074924
SCBDS33S6KC074926
SCBDS33S8KC074927
SCBDS33S1KC074929
SCBDA33S4KC074930
SCBDS33S5KC074934
SCBDS33S9KC074936
SCBDS33S2KC074938
SCBDS33S4KC074939
SCBDD33S8KC074940
SCBDS33S2KC074941
SCBDS33S6KC074943
SCBDS33S8KC074944
SCBDS33S7KC074949
SCBDA33S1KC074951
SCBDS33S0KC074954
SCBDS33S2KC074955
SCBDS33S6KC074957
SCBDS33SXKC074959
SCBDS33S8KC074961
SCBDS33S3KC074964
SCBDS33S0KC074968
SCBDS33SXKC074993
SCBDS33S1KC074994

2020 Model Year

SCBDK33S3LC071645	SCBDG4ZG8LC075152	SCBDG4ZG6LC075313	SCBDA33S1LC075454	SCBDG4ZG4LC075598
SCBDG4ZG2LC073770	SCBDG4ZG1LC075154	SCBDG4ZGXLC075315	SCBDG4ZG4LC075455	SCBDB4ZG0LC075600
SCBDG4ZG6LC073898	SCBDE33S7LC075155	SCBDG4ZG1LC075316	SCBDG4ZG8LC075457	SCBDG4ZG8LC075605
SCBDG4ZG8LC073899	SCBDG4ZG7LC075157	SCBDG4ZG3LC075317	SCBDG4ZG8LC075460	SCBDB4ZG3LC075607
SCBDG4ZG4LC074032	SCBDG4ZG0LC075162	SCBDG4ZG7LC075319	SCBDA33S0LC075462	SCBDG4ZG3LC075608
SCBDS33S0LC074969	SCBDE33S8LC075164	SCBDJ33S2LC075320	SCBDS33S8LC075464	SCBDB4ZG5LC075611
SCBDS33S2LC074973	SCBDS33S0LC075166	SCBDG4ZG7LC075322	SCBDG4ZG0LC075467	SCBDB4ZG7LC075612
SCBDB4ZG5LC074975	SCBDG4ZG1LC075168	SCBDG4ZG0LC075324	SCBDG4ZG4LC075469	SCBDG4ZG9LC075614
SCBDS33S8LC074976	SCBDB4ZG1LC075170	SCBDG4ZG4LC075326	SCBDG4ZG2LC075471	SCBDG4ZG0LC075615
SCBDS33S3LC074979	SCBDG4ZG3LC075172	SCBDG4ZG8LC075328	SCBDS33S7LC075472	SCBDB4ZG6LC075617
SCBDS33S3LC074982	SCBDG4ZG7LC075174	SCBDS33S6LC075334	SCBDS33S0LC075474	SCBDG4ZG8LC075619
SCBDS33S7LC074984	SCBDG4ZG0LC075176	SCBDG4ZG7LC075336	SCBDS33S2LC075475	SCBDG4ZG4LC075620
SCBDB4ZG8LC074985	SCBDG4ZG4LC075178	SCBDG4ZG9LC075340	SCBDG4ZG3LC075477	SCBDS33S0LC075622
SCBDS33S2LC074987	SCBDE33SXLC075179	SCBDG4ZG2LC075342	SCBDE33S9LC075478	SCBDG4ZG1LC075624
SCBDS33S2LC074990	SCBDA33S3LC075181	SCBDE33S8LC075343	SCBDS33S6LC075480	SCBDG4ZG5LC075626
SCBDB4ZG2LC074996	SCBDG4ZG8LC075183	SCBDS33S6LC075348	SCBDG4ZG5LC075481	SCBDB4ZG0LC075628
SCBDS33S5LC074997	SCBDG4ZG1LC075185	SCBDG4ZG5LC075349	SCBDG4ZG9LC075483	SCBDB4ZG2LC075629
SCBDB4ZG9LC075000	SCBDG4ZG5LC075187	SCBDG4ZG3LC075351	SCBDG4ZG0LC075484	SCBDG4ZG0LC075632
SCBDS33S1LC075001	SCBDG4ZG9LC075189	SCBDG4ZG7LC075353	SCBDS33S9LC075487	SCBDG4ZG4LC075634
SCBDS33S5LC075003	SCBDG4ZG7LC075191	SCBDG4ZG0LC075355	SCBDA33S5LC075490	SCBDG4ZG6LC075635
SCBDB4ZGXLC075006	SCBDG4ZG0LC075193	SCBDG4ZG4LC075357	SCBDS33S2LC075492	SCBDG4ZGXLC075637
SCBDB4ZG5LC075009	SCBDE33S1LC075197	SCBDG4ZGXLC075363	SCBDS33S4LC075493	SCBDG4ZG3LC075639
SCBDS33S6LC075012	SCBDA33S0LC075199	SCBDG4ZG3LC075365	SCBDG4ZG5LC075495	SCBDG4ZG1LC075641
SCBDS33SXLC075014	SCBDE33SXLC075201	SCBDG4ZG5LC075366	SCBDS33SXLC075496	SCBDG4ZG0LC075646
SCBDA33S3LC075018	SCBDG4ZGXLC075203	SCBDS33S1LC075368	SCBDG4ZG0LC075498	SCBDG4ZG6LC075649
SCBDS33S0LC075023	SCBDB4ZG9LC075207	SCBDG4ZG9LC075371	SCBDS33S5LC075499	SCBDG4ZG4LC075651
SCBDG4ZG1LC075025	SCBDG4ZG0LC075209	SCBDG4ZG2LC075373	SCBDS33S8LC075500	SCBDG4ZG8LC075653
SCBDG4ZG5LC075027	SCBDG4ZG9LC075211	SCBDS33S9LC075375	SCBDG4ZG9LC075502	SCBDG4ZG1LC075655
SCBDG4ZG2LC075048	SCBDE33S6LC075213	SCBDG4ZGXLC075377	SCBDS33S3LC075503	SCBDG4ZG5LC075657
SCBDE33S4LC075050	SCBDG4ZG6LC075215	SCBDG4ZGXLC075380	SCBDS33S2LC075508	SCBDG4ZG7LC075658
SCBDG4ZG2LC075051	SCBDG4ZGXLC075217	SCBDG4ZG3LC075382	SCBDG4ZG1LC075512	SCBDG4ZG5LC075660
SCBDG4ZGXLC075055	SCBDS33S6LC075219	SCBDG4ZG7LC075384	SCBDG4ZG5LC075514	SCBDG4ZG9LC075662
SCBDG4ZG5LC075058	SCBDG4ZG9LC075225	SCBDG4ZG0LC075386	SCBDA33S3LC075519	SCBDB4ZG8LC075666
SCBDG4ZG3LC075060	SCBDG4ZG6LC075229	SCBDG4ZG4LC075388	SCBDA33S1LC075521	SCBDG4ZG8LC075667
SCBDS33S3LC075064	SCBDG4ZG4LC075231	SCBDG4ZG4LC075391	SCBDG4ZG6LC075523	SCBDG4ZG1LC075669
SCBDG4ZG4LC075066	SCBDG4ZG8LC075233	SCBDS33S2LC075394	SCBDS33S2LC075525	SCBDG4ZGXLC075671
SCBDG4ZG8LC075068	SCBDG4ZG1LC075235	SCBDA33S2LC075396	SCBDG4ZG3LC075527	SCBDG4ZG3LC075673
SCBDE33SXLC075070	SCBDG4ZG5LC075237	SCBDA33S4LC075397	SCBDG4ZG7LC075529	SCBDG4ZG5LC075674
SCBDG4ZGXLC075072	SCBDG4ZG9LC075239	SCBDG4ZG9LC075399	SCBDG4ZG5LC075531	SCBDG4ZG9LC075676
SCBDG4ZG3LC075074	SCBDG4ZG7LC075241	SCBDG4ZG1LC075400	SCBDA33S6LC075532	SCBDG4ZG2LC075678
SCBDG4ZG0LC075078	SCBDG4ZG4LC075245	SCBDG4ZG5LC075402	SCBDS33S1LC075533	SCBDB4ZG2LC075680
SCBDE33S2LC075080	SCBDG4ZG8LC075247	SCBDG4ZG7LC075403	SCBDS33S5LC075535	SCBDG4ZG6LC075683
SCBDS33S9LC075084	SCBDG4ZG1LC075249	SCBDG4ZG0LC075405	SCBDG4ZG4LC075536	SCBDG4ZGXLC075685
SCBDG4ZG3LC075088	SCBDG4ZG3LC075253	SCBDA33S1LC075406	SCBDS33S0LC075541	SCBDG4ZG3LC075687
SCBDG4ZG9LC075094	SCBDG4ZG9LC075256	SCBDA33S5LC075408	SCBDG4ZG1LC075543	SCBDS33S8LC075688
SCBDG4ZG0LC075095	SCBDG4ZG2LC075258	SCBDG4ZG8LC075409	SCBDG4ZG5LC075545	SCBDG4ZG3LC075690
SCBDG4ZG4LC075097	SCBDG4ZG0LC075260	SCBDG4ZG6LC075411	SCBDS33S5LC075549	SCBDG4ZG7LC075692
SCBDG4ZG8LC075099	SCBDG4ZG4LC075262	SCBDS33S0LC075412	SCBDS33S3LC075551	SCBDG4ZG4LC075696
SCBDG4ZG2LC075101	SCBDS33S2LC075265	SCBDS33S4LC075414	SCBDS33S7LC075553	SCBDG4ZG8LC075698
SCBDG4ZG6LC075103	SCBDG4ZG7LC075269	SCBDG4ZG3LC075415	SCBDA33S5LC075554	SCBDG4ZGXLC075699
SCBDE33S3LC075105	SCBDG4ZG5LC075271	SCBDS33S1LC075418	SCBDS33S2LC075556	SCBDG4ZG4LC075701
SCBDG4ZG3LC075107	SCBDG4ZG7LC075272	SCBDG4ZG0LC075419	SCBDG4ZG5LC075559	SCBDG4ZG5LC075707
SCBDE33S0LC075109	SCBDG4ZG2LC075275	SCBDG4ZG9LC075421	SCBDG4ZG3LC075561	SCBDG4ZG9LC075709
SCBDG4ZG5LC075111	SCBDG4ZG6LC075277	SCBDG4ZG0LC075422	SCBDG4ZG7LC075563	SCBDG4ZG7LC075711
SCBDS33S1LC075113	SCBDG4ZGXLC075279	SCBDG4ZG6LC075425	SCBDG4ZG0LC075565	SCBDG4ZG2LC075714
SCBDG4ZG2LC075115	SCBDG4ZG8LC075281	SCBDS33S2LC075427	SCBDG4ZG2LC075566	SCBDS33S0LC075717
SCBDG4ZG6LC075117	SCBDG4ZG1LC075283	SCBDG4ZG1LC075428	SCBDG4ZG6LC075568	SCBDS33S2LC075718
SCBDG4ZGXLC075119	SCBDG4ZG3LC075284	SCBDG4ZGXLC075430	SCBDS33S0LC075569	SCBDG4ZG8LC075720
SCBDG4ZG8LC075121	SCBDG4ZG7LC075286	SCBDE33S5LC075431	SCBDG4ZG6LC075571	SCBDG4ZGXLC075721
SCBDS33S8LC075125	SCBDG4ZG9LC075290	SCBDG4ZG5LC075433	SCBDG4ZG8LC075572	SCBDS33S6LC075723
SCBDG4ZG9LC075127	SCBDG4ZG0LC075291	SCBDS33SXLC075434	SCBDG4ZG1LC075574	SCBDB4ZG7LC075724
SCBDG4ZG0LC075131	SCBDG4ZG4LC075293	SCBDS33S5LC075437	SCBDG4ZG5LC075576	SCBDG4ZG9LC075726
SCBDS33S9LC075134	SCBDG4ZG8LC075295	SCBDS33S7LC075438	SCBDB4ZG9LC075577	SCBDG4ZG0LC075727
SCBDG4ZGXLC075136	SCBDG4ZGXLC075296	SCBDG4ZG2LC075440	SCBDG4ZG7LC075580	SCBDS33S7LC075729
SCBDG4ZG3LC075138	SCBDG4ZG3LC075298	SCBDG4ZG4LC075441	SCBDS33S3LC075582	SCBDG4ZG0LC075730
SCBDG4ZG1LC075140	SCBDS33S0LC075300	SCBDA33S7LC075443	SCBDG4ZG2LC075583	SCBDG4ZG4LC075732
SCBDG4ZG5LC075142	SCBDG4ZG1LC075302	SCBDS33S2LC075444	SCBDG4ZG6LC075585	SCBDG4ZG6LC075733
SCBDG4ZG9LC075144	SCBDG4ZG7LC075305	SCBDA33S2LC075446	SCBDB4ZGXLC075586	SCBDB4ZG1LC075735
SCBDG4ZG2LC075146	SCBDG4ZG0LC075307	SCBDS33SXLC075448	SCBDG4ZG1LC075591	SCBDG4ZG3LC075737
SCBDS33S9LC075148	SCBDG4ZG4LC075309	SCBDG4ZG5LC075450	SCBDG4ZG7LC075594	SCBDB4ZG9LC075739
SCBDG4ZG4LC075150	SCBDG4ZG2LC075311	SCBDG4ZG9LC075452	SCBDG4ZG9LC075595	SCBDG4ZG5LC075741

SCBDB4ZG9LC075742
SCBDG4ZG0LC075744
SCBDG4ZG4LC075746
SCBDG4ZG6LC075750
SCBDG4ZG3LC075754
SCBDG4ZG9LC075757
SCBDG4ZG0LC075758
SCBDG4ZG2LC075759
SCBDB4ZG0LC075760
SCBDG4ZG2LC075762
SCBDG4ZG8LC075765
SCBDA3ZG7LC075767
SCBDG4ZG5LC075769
SCBDG4ZG0LC075775
SCBDG4ZG4LC075777
SCBDS33S7LC075780
SCBDS33S2LC075816
SCBDG4ZG1LC075817
SCBDG4ZG3LC075818
SCBDG4ZG5LC075819
SCBDG4ZG1LC075820
SCBDS33S6LC075821
SCBDG4ZG2LC075826
SCBDS33S9LC075828
SCBDG4ZG4LC075830
SCBDB4ZGXLC075832
SCBDG4ZG1LC075834
SCBDG4ZG0LC075839
SCBDA33S8LC075841
SCBDG4ZG2LC075843
SCBDS33S9LC075845
SCBDG4ZGXLC075847
SCBDS33S4LC075848
SCBDG4ZGXLC075850
SCBDS33S4LC075851
SCBDG4ZG5LC075853
SCBDS33S1LC075855
SCBDG4ZG4LC075858
SCBDB4ZG4LC075860
SCBDG4ZG8LC075863
SCBDG4ZG1LC075865
SCBDG4ZG5LC075867
SCBDB4ZG0LC075869
SCBDS33SXLC075871
SCBDA3ZG6LC075873
SCBDG4ZG2LC075874
SCBDB4ZG8LC075876
SCBDG4ZGXLC075878
SCBDG4ZG8LC075880
SCBDS33S4LC075882
SCBDB4ZG5LC075883
SCBDG4ZG7LC075885
SCBDG4ZG9LC075886
SCBDG4ZG2LC075888
SCBDG4ZG0LC075890
SCBDB4ZG6LC075892
SCBDG4ZG6LC075893
SCBDG4ZGXLC075895
SCBDG4ZG5LC075898
SCBDG4ZG1LC075901
SCBDG4ZG7LC075904
SCBDC33S7LC075906
SCBDS33S5LC075907
SCBDG4ZG4LC075911
SCBDG4ZG8LC075913
SCBDG4ZG1LC075915
SCBDG4ZG5LC075917
SCBDB4ZG0LC075919
SCBDG4ZG7LC075921
SCBDG4ZG0LC075923
SCBDG4ZG4LC075925
SCBDG4ZG8LC075930
SCBDB4ZG3LC075932
SCBDG4ZG5LC075934
SCBDA33S8LC075936
SCBDS33S3LC075937
SCBDG4ZG4LC075939
SCBDG4ZG2LC075941
SCBDG4ZG4LC075942
SCBDG4ZG8LC075944
SCBDG4ZG1LC075946
SCBDG4ZG5LC075948
SCBDS33S6LC075950
SCBDS33SXLC075952
SCBDS33S1LC075953
SCBDG4ZG4LC075956
SCBDG4ZG8LC075958
SCBDG4ZG6LC075960
SCBDB4ZGXLC075961
SCBDG4ZG1LC075963
SCBDG4ZG7LC075966
SCBDG4ZG9LC075967
SCBDG4ZG2LC075969
SCBDG4ZG0LC075971
SCBDG4ZGXLC075976
SCBDG4ZG3LC075978
SCBDG4ZG1LC075980
SCBDG4ZG7LC075983
SCBDG4ZG0LC075985
SCBDE33SXLC075988
SCBDS33S9LC075991
SCBDG4ZGXLC075993
SCBDS33S4LC075994
SCBDG4ZG5LC075996
SCBDG4ZG0LC075999
SCBDG4ZG1LC076000
SCBDS33S8LC076002
SCBDS33S1LC076004
SCBDG4ZG2LC076006
SCBDG4ZG6LC076008
SCBDC33S4LC076009
SCBDG4ZG6LC076011
SCBDG4ZG8LC076012
SCBDG4ZG1LC076014
SCBDB4ZG7LC076016
SCBDS33S1LC076018
SCBDG4ZG7LC076020
SCBDG4ZG0LC076022
SCBDG4ZG4LC076024
SCBDG4ZG8LC076026
SCBDG4ZG1LC076028
SCBDG4ZGXLC076030
SCBDG4ZG3LC076032
SCBDG4ZG7LC076034
SCBDG4ZG9LC076035
SCBDG4ZG4LC076038
SCBDG4ZG2LC076040
SCBDG4ZG6LC076042
SCBDG4ZG5LC076047
SCBDG4ZG9LC076049
SCBDB4ZG9LC076051
SCBDG4ZG2LC076054
SCBDG4ZG6LC076056
SCBDG4ZG1LC076059
SCBDG4ZGXLC076061
SCBDG4ZG3LC076063
SCBDG4ZG7LC076065
SCBDG4ZG2LC076068
SCBDG4ZG0LC076070
SCBDS33S7LC076072
SCBDS33S0LC076074
SCBDG4ZG1LC076076
SCBDG4ZG5LC076078
SCBDG4ZG3LC076080
SCBDB4ZG9LC076082
SCBDG4ZG2LC076085
SCBDG4ZG8LC076088
SCBDG4ZG6LC076090
SCBDS33S6LC076094
SCBDG4ZG7LC076096
SCBDG4ZG0LC076098
SCBDG4ZG5LC076100
SCBDG4ZG9LC076102
SCBDG4ZG2LC076104
SCBDG4ZG6LC076106
SCBDG4ZGXLC076108
SCBDG4ZG8LC076110
SCBDG4ZG1LC076112
SCBDS33S8LC076114
SCBDG4ZG7LC076115
SCBDG4ZG0LC076117
SCBDG4ZG2LC076118
SCBDG4ZG0LC076120
SCBDG4ZG4LC076122
SCBDS33S0LC076124
SCBDG4ZG1LC076126
SCBDG4ZG3LC076127
SCBDS33S8LC076128
SCBDG4ZG7LC076132
SCBDG4ZG0LC076134
SCBDA33S3LC076136
SCBDG4ZG6LC076140
SCBDG4ZGXLC076142
SCBDB4ZG5LC076144
SCBDG4ZG0LC076148
SCBDG4ZG9LC076150
SCBDG4ZG2LC076152
SCBDG4ZG4LC076153
SCBDS33S0LC076155
SCBDG4ZG7LC076163
SCBDG4ZG9LC076164
SCBDG4ZG2LC076166
SCBDG4ZG4LC076167
SCBDG4ZG8LC076169
SCBDA33S9LC076173
SCBDG4ZG1LC076174
SCBDB4ZG5LC076175
SCBDA33S6LC076177
SCBDG4ZG0LC076179
SCBDG4ZG7LC076180
SCBDG4ZG2LC076183
SCBDS33S9LC076185
SCBDG4ZG8LC076186
SCBDG4ZGXLC076187
SCBDG4ZG3LC076189
SCBDG4ZGXLC076190
SCBDB4ZG5LC076192
SCBDG4ZG7LC076194
SCBDG4ZG0LC076196
SCBDG4ZG1LC076207
SCBDG4ZG3LC076208
SCBDG4ZG1LC076210
SCBDB4ZG5LC076211
SCBDG4ZG7LC076213
SCBDG4ZG0LC076215
SCBDS33S5LC076216
SCBDG4ZG6LC076218
SCBDS33S9LC076221
SCBDS33S0LC076222
SCBDG4ZG1LC076224
SCBDG4ZG5LC076226
SCBDG4ZG7LC076227
SCBDG4ZG0LC076229
SCBDG4ZG9LC076231
SCBDG4ZG2LC076233
SCBDG4ZG6LC076235
SCBDG4ZG8LC076236
SCBDG4ZG1LC076238
SCBDS33S6LC076239
SCBDS33S4LC076241
SCBDG4ZG5LC076243
SCBDG4ZG9LC076245
SCBDG4ZG2LC076247
SCBDG4ZG6LC076249
SCBDG4ZG4LC076251
SCBDG4ZG8LC076253
SCBDG4ZG1LC076255
SCBDG4ZG5LC076257
SCBDG4ZG9LC076259
SCBDG4ZG0LC076263
SCBDB4ZG6LC076265
SCBDG4ZG6LC076266
SCBDG4ZGXLC076268
SCBDG4ZG8LC076270
SCBDG4ZGXLC076271
SCBDS33S6LC076273
SCBDG4ZG7LC076275
SCBDG4ZG9LC076276
SCBDG4ZG2LC076278
SCBDG4ZG4LC076282
SCBDG4ZG8LC076284
SCBDG4ZG3LC076287
SCBDS33SXLC076289
SCBDG4ZG5LC076291
SCBDG4ZG0LC076294
SCBDG4ZG4LC076296
SCBDG4ZGXLC076299
SCBDG4ZG4LC076301
SCBDG4ZG8LC076303
SCBDG4ZG5LC076307
SCBDG4ZG7LC076308
SCBDG4ZG5LC076310
SCBDG4ZG9LC076312
SCBDS33S3LC076313
SCBDG4ZG4LC076315
SCBDS33S9LC076316
SCBDG4ZGXLC076318
SCBDS33S0LC076320
SCBDG4ZG9LC076326
SCBDG4ZG0LC076327
SCBDG4ZG4LC076329
SCBDG4ZG0LC076330
SCBDG4ZG4LC076332
SCBDG4ZG6LC076333
SCBDG4ZG1LC076336
SCBDG4ZG7LC076339
SCBDS33S6LC076340
SCBDG4ZG7LC076342
SCBDG4ZG0LC076344
SCBDG4ZG6LC076347
SCBDG4ZGXLC076349
SCBDG4ZG8LC076351
SCBDG4ZG5LC076355
SCBDA33S1LC076359
SCBDG4ZG2LC076362
SCBDG4ZG6LC076364
SCBDG4ZGXLC076366
SCBDG4ZG3LC076368
SCBDG4ZG5LC076372
SCBDG4ZG7LC076373
SCBDG4ZG0LC076375
SCBDG4ZG2LC076376
SCBDG4ZG6LC076378
SCBDG4ZG4LC076380
SCBDS33S0LC076382
SCBDG4ZGXLC076383
SCBDS33S6LC076385
SCBDA33SXLC076389
SCBDG4ZG9LC076391
SCBDG4ZG2LC076393
SCBDA33S3LC076394
SCBDG4ZG8LC076396
SCBDG4ZGXLC076397
SCBDG4ZG6LC076400
SCBDG4ZG8LC076401
SCBDG4ZG1LC076403
SCBDG4ZG5LC076405
SCBDG4ZG0LC076408
SCBDA33S9LC076416
SCBDS33S3LC076425
SCBDS33S5LC076426
SCBDG4ZG6LC076428
SCBDG4ZG6LC076431
SCBDG4ZGXLC076433
SCBDG4ZG3LC076435
SCBDG4ZG9LC076438
SCBDG4ZG7LC076440
SCBDG4ZG9LC076441
SCBDG4ZG4LC076444
SCBDS33S0LC076446
SCBDG4ZG1LC076448
SCBDG4ZGXLC076450
SCBDG4ZG3LC076452
SCBDG4ZG9LC076455
SCBDG4ZG2LC076457
SCBDG4ZG2LC076460