PREVOST

Instruction Sheet IS-19901D

ELECTRIC FAN DRIVE COOLING SYSTEM CONVERSION WITH BOSCH ALTERNATOR

X3 coaches (2PCG…), X3 VIP with big A/C system (2PCB…, 2PCC…) US10 to GHG17 (B-5002 to H-6179)

REVISION: D Sept 17-21	THIS DOCUMENT SUPERSEDES PREVIOUS VERSION. Four new holes drilled for cooling pack relocation
REVISION: C July 05-21	THIS DOCUMENT SUPERSEDES PREVIOUS VERSION. Fan drive power cable 069245 replaced by 0610563

IMPORTANT NOTE

VEHICLES <u>EQUIPPED</u> WITH OPTIONAL PRIME ENERGY MANAGEMENT SYSTEM

TO PREVENT OVERLOADING THE L.H. SIDE ALTERNATOR, IT IS VERY IMPORTANT TO DISABLE « PRIME » SYSTEM ON VEHICLES RECEIVING THIS CONVERSION. PLEASE CONTACT YOUR NEAREST PREVOST SERVICE CENTER TO HAVE THE PRIME SYSTEM DISABLED. A SOFTWARE TOOL IS NEEDED TO DO SO.

MATERIAL

Kit **IS19901** contains the following parts:

Part No.	DESCRIPTION		Qty
050343	FAN SUPPORT PANEL		1
050355	UPPER SHROUD TRANSITION		1
050359	LEFT SHROUD TRANSITION		1
050360	RIGHT SHROUD TRANSITION		1
050362	LOWER SHROUD TRANSITION		1
050363	LOWER LEFT SHROUD PANEL X3 US10+		1
050364	UPPER LEFT SHROUD PANEL & WURTH BOX SUPPORT X3 US10+		1
050365	LOWER SHROUD PANEL X3 US10+		1
050366	UPPER SHROUD PANEL X3 US10+		1
050367	RIGHT SHROUD PANEL		1
050369	PULL ROD BOX		1
050380	UPPER LEFT SHROUD TRANSITION PANEL		1
050415	UPPER LEFT SHROUD PANEL		1

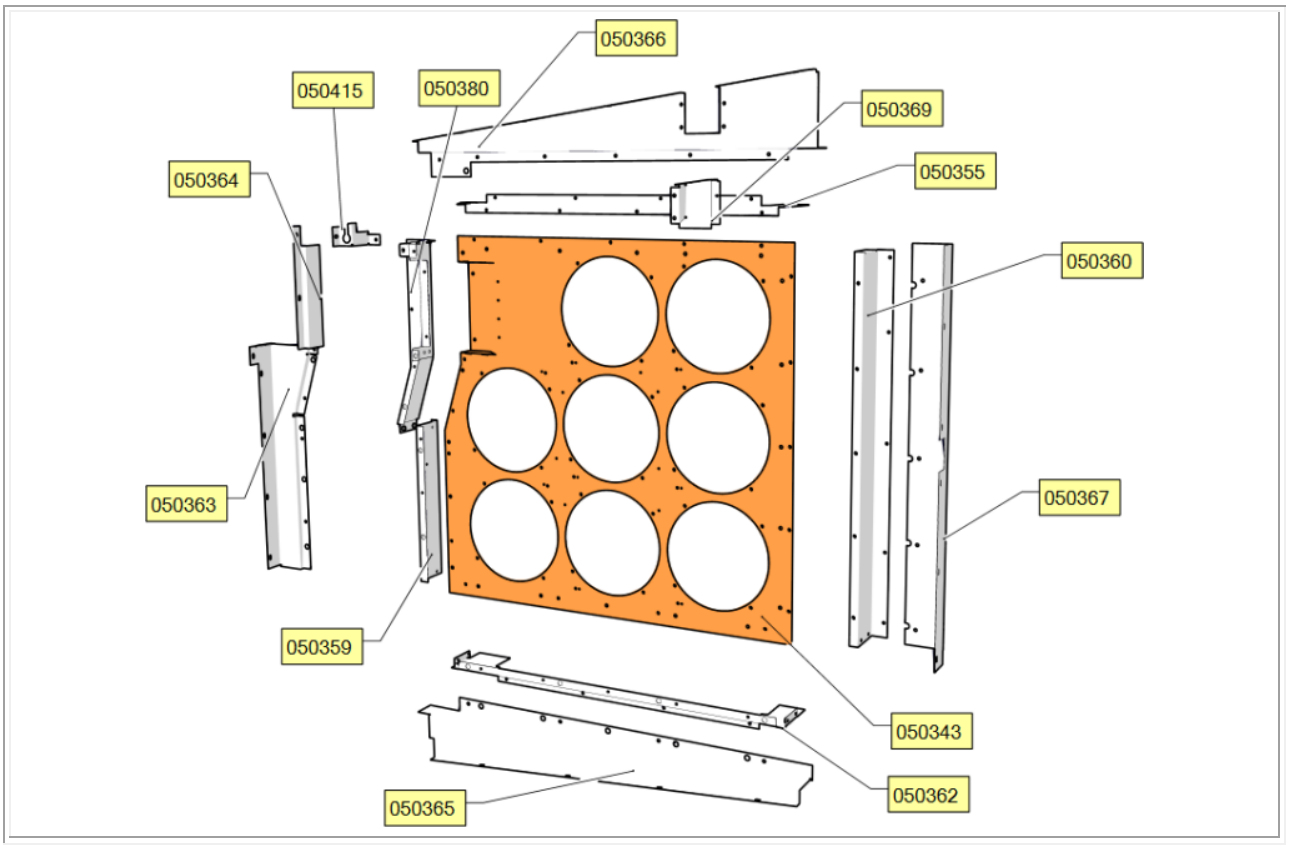

	MECHANICAL		
012349	IDLER PULLEY		1
012941	PULLEY, DRIVE 10 RIBS		1
012942	L.H. ENGINE MOUNT	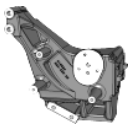	1
011213	SUPPORT, IDLER + TENSIONER	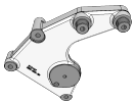	1
453076	CAP, DUST		1
506026	1x BELT, DRIVE POLY V 10PK1695 1x BELT, DRIVE POLY V 10PK1695 (for your spare kit)		2

506080	1x BELT, DRIVE POLY V 8PK1575 1x BELT, DRIVE POLY V 8PK1575 (for your spare kit)		2
510991	TENSIONER, BELT		1
560748	BOSCH HD10PLBH ALTERNATOR 28V-150AMP J180		1
0600265	PULLEY, ALTERNATOR 10PK, 73 DOB		1
	PIPES		
050308	CAC OUTLET PIPE X3 US10+		1
050309	RADIATOR INLET COOLANT PIPE X3 US10+		1
050328	CAC INLET PIPE X3 US10+		1
050331	RADIATOR OUTLET PIPE X3 US10+		1
053662	TURBO DIFFUSER PIPE, STRAIGHT	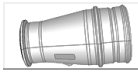	1
	HOSES		
052366	HOSE 3/8 ID X 61 in (1550 mm) LONG		1
030096	HOSE, FLEXIBLE - CHARGE AIR Location: turbo outlet & engine intake	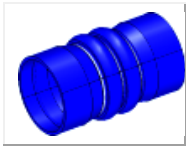	2
531469	HOSE, FLEXIBLE - CHARGE AIR Location: CAC outlet		1
531471	HOSE, FLEXIBLE - CHARGE AIR Location: CAC inlet	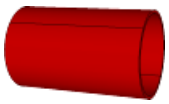	1
052889	HOSE, SILICONE 2 1/2" ID Location : coolant pipes		1

053617	HOSE, SILICONE Location : coolant pipes		3
	CLAMPS+ SEALS		
992081	HOSE CLAMP CT CAILLAU 12-22 Location : coolant filter		4
992086	HOSE CLAMP CT CAILLAU Location : radiator outlet pipe		2
992089	HOSE CLAMP CT CAILLAU 60mm-80mm Location : coolant pipes		16
1675066	SEALING RING CHARGE AIR HOSE Location: Engine intake elbow		2
20592783	CLAMP, CHARGE AIR HOSE D100 V-CLAMP DIA. 107.7 Location: Engine intake elbow		2
20592787	CLAMP, TURBO DIFFUSER PIPE V-BAND DIA. 81.7 Location: Turbo to diffuser pipe connection	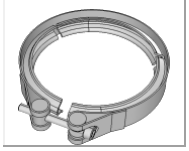	1
21021850	CLAMP, EXHAUST PIPE V-BAND 5 INCHES	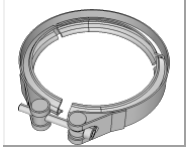	2
21095726	GASKET EXHAUST PIPE V-BAND JOINT, 5 INCHES	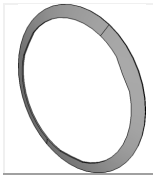	2
21096684	GASKET, TURBO OUTLET Location: Turbo to diffuser pipe connection		1

21490616	CLAMPS, SPRING LOAD - CHARGE AIR Location: CAC outlet & inlet		8
21490630	CLAMP, SPRING LOAD - CHARGE AIR Location: turbo outlet & engine intake	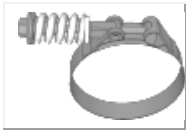	4
	SUPPORTS/BRACKETS		
050265	COOLANT FILTER SUPPORT H3	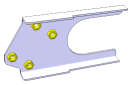	1
050266	ALTERNATOR BATTERY CABLE SUPPORT	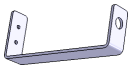	1
050351	UPPER RADIATOR SUPPORT X3	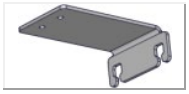	1
053040	SUPPORT, COOLANT SURGE TANK	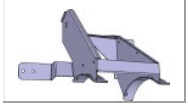	1
053043	SUPPORT, I/O MODULE		1
060102	ALTERNATOR BRACKET, LOWER		1
381594	U-SHAPED BRACKET, ALTERNATOR TELLTALE		1
21185073	MOUNT, ANTI-VIBRATION	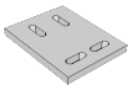	1
	MISC.		
010060	DECAL, BELT ROUTING	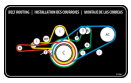	1
069205	DECAL, WARNING		2
506025	RUBBER EXTRUSION, BLACK	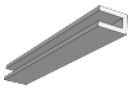	8 ft
060297	STUD ADAPTER, ALTERNATOR M/F-M8	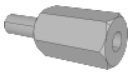	1
380360	GROUND STUD	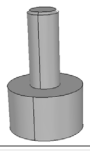	1

506040	TAPE, ADHESIVE AD1 EPDM CC GY 5/16"X3/4"X25'		1
21937327	FILTER, COOLANT		1
	ELECTRICAL		
012921	GROUND STUD		1
561540	TERMINAL, TAB	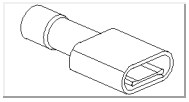	2
561608	TERMINAL, PIN		4
561610	CONNECTOR HOUSING, PED WEATHER PACK 4 WIRES		1
561783	CAVITY PLUG, CONNECTOR	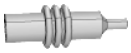	4
563593	CONNECTOR, WITH END-OF-LINE 120 OHMS RESISTOR		2
563750	FUSE HOLDER, AMG TYPE		1
564520	FUSE, AMG 300A		1
564612	CIRCUIT BREAKER BOX		1
565191	FAN, ELECTRIC		8
563533	HAND GUARD, FAN		8

830165	24V RED TELLTALE LIGHT MODULE		1
22722850	I/O-B MULTIPLEX MODULE	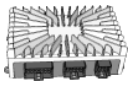	1
23499009-EFD	MCM, PROGRAMED	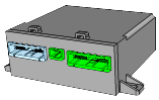	1
	HARNESSES		
060682	ALTERNATOR POWER CABLE	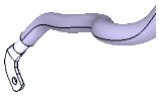	1
068820	HARNESS KIT, FAN DRIVE		1
0610563	FAN DRIVE POWER CABLE, 2855 mm		1
069246	GROUND CABLE, FAN DRIVE	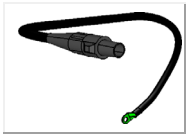	1
069504	GROUND CABLE, LEFT ALTERNATOR		1
069511	CONTROL HARNESS LEFT ALTERNATOR		1
23445869	MCM TO I/O-B INTERFACE HARNESS		1
23488790	FAN TO RJB INTERFACE HARNESS		1
23490553	VEHICLE INTERFACE HARNESS		1
23498450	MASTER RELAY TO 300A FUSE CABLE, 300 mm		1
	HARDWARE MISC		
N37749	TIE, NYLON DOUBLE		12
504016	TIE, NYLON BLACK (LARGE)		58
509491	TIE, NYLON LARGE EXTRA STRONG 250 LBS		30
504013	MOUNT, TIE HOLE 1/4"	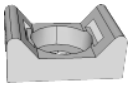	15

504751	MOUNT, TIE SWIVEL		4
504750	CABLE TIE W/FIR TREE MOUNT(120 POUNDS)		2
509490	MOUNT, TIE DOUBLE GRAY		17
562679	MOUNT, SQUARE SELF-ADHESIVE BLACK	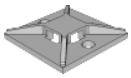	4
5001965	SPRING NUT	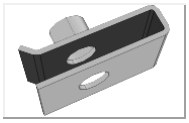	18
	RIVETS		
504117	RIVET, 3/16		5
504379	RIVET, POP DOME SS OE 3/16X1/4	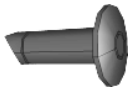	20
504610	RIVET MGL PRDG SS 1/4X5/8		18
	WASHER		
500321	WASHER, FLAT SPR N500 .331X.827X.098(M8,5/16)		1
500449	WASHER, FLAT SS .687X1.5X0.078 (M16,5/8)		1
500482	WASHER, SPLIT LOCK Z050 .506X.873X.125 (M12,1/2)		1
500942	WASHER, SPLIT LOCK N500 8.1X14.8X2 (M8,5/16,#18)		4
502570	WASHER, SPLIT LOCK SS 6.1X11.8X1.6 (M6,#12)		85
502573	WASHER FL SS 6.4 X 12.0 X 1.6 (M6,1/4)		1
502709	WASHER		9
507657	WASHER, BANJO FITTING M14		8
5001341	WASHER, FLAT SS 8.4X17X1.6 (M8,5/16)		6
5001737	WASHER, SPLIT LOCK N500 10.2X18.1X2.2 (M10,3/8)		4

5001751	WASHER, FLAT N500 10.5X26X2 (M10,3/8)		10
5001833	WASHER, BELLEVILLE SPR SS 301 6.65X17.4X1.27(M6,1/4		32
5001868	WASHER, BELLEVILLE SS 8.4X18X2 (M8,5/16)		4
5001935	WASHER, FLAT SS 10.5X18X1.6 (M10,3/8)		1
5002008	WASHER, FLAT HARD N500 13X35X5 (M12,1/2)		1
	NUTS		
500998	NUT HEX BR 1/2-13		1
502837	NUT HEXF STO N500 M8-1.25		2
502854	NUT HEX N500 M6-1		3
502859	NUT HEX NYRT NX500 M10-1.5 G10		4
5001180	NUT 10-24		4
5001182	NUT HEX NYRT SS M6-1		1
5001665	NUT HEX NYRT NX500 M22-2.5		1
5001728	NUT HEXF STO N500 M12 CL10		1
5001761	NUT HEXF NYRT NX500 M12-1.75 G8		4
5001930	NUT HEXF NYRT NX500 M10-1.50 PC 10		2
5001932	NUT HEXF NYRT NX500 M6-1 G8.8		3
5001983	NUT HEX NYRT NSS M8-1.25X9.5		5
21429955	NUT, FLANGED		1
	SCREWS		
500119	SCREW, CAP HEX SS NSS M8X1.25X20		4
500594	SCREW 7/16-20X1.25 G8		1
500623	SCREW TC		2
500658	SCREW TC PAN PH Z050 10-24X3/4		11
502719	SCREW, CAP HEX SS NSS M10X20 G8.8		1
502686	SCREW, CAP HEX SS NSS M6X30		33
502804	SCREW, CAP HEX N500 M10-1.5X25 G8.8		8
502888	SCREW, HEX Z050 M6-14X35 G8.8		3
502848	SCREW TC HEX F N500 1/4-20X3/		22

502950	SCREW SHR HEXF N500 12.9X160LG CL10.9		1
5001296	SCREW, CAP HEXFN500 M12-1.75 X 80 CL10.9 PT		6
5001447	BOLT 10-24X5/8		4
5001643	SCREW, CAP HEXF G500 M8-1.25X25 G8.8 PT		3
5001697	SCREW, CAP HEX SS NSS M6X16		85
5001738	SCREW, CAP HEX N500 M8X30 G8.8 FT		4
5001745	SCREW, CAP HEX N500 M8-1.25X25 G8.8		2
5001786	SCREW, CAP HEXF AD N500 M12-1.75X30 G8.8		1
5001799	SCREW, CAP HEXF N500 M10-1.5 X 70 G10.9		4
5001800	SCREW, CAP HEXF N500 M10X45 G10.9		1
5001940	SCREW CAP HEX N500 M12X1.75X140		4
	INSTRUCTIONS		
IS-19901	INSTRUCTION SHEET		1
FI-19901	FEUILLE D'INSTRUCTION		1

Other parts or products that may be required:

Part No.	DESCRIPTION
680459	Loctite 404, INSTANT ADHESIVE 9.3 gr
680098	LOCTITE 567 THREAD SEALANT 250 ML
680038	LOCTITE 243, BLUE THREAD LOCKER 50 ML
684013	LOCTITE COLOR GUARD RUBBER COATING

PROCEDURE

DANGER

Park vehicle safely, apply parking brake, stop the engine. Prior to working on the vehicle, set the ignition switch to the OFF position and trip the main circuit breakers equipped with a trip button.

DIAGRAM OF ELECTRICAL CONNECTIONS

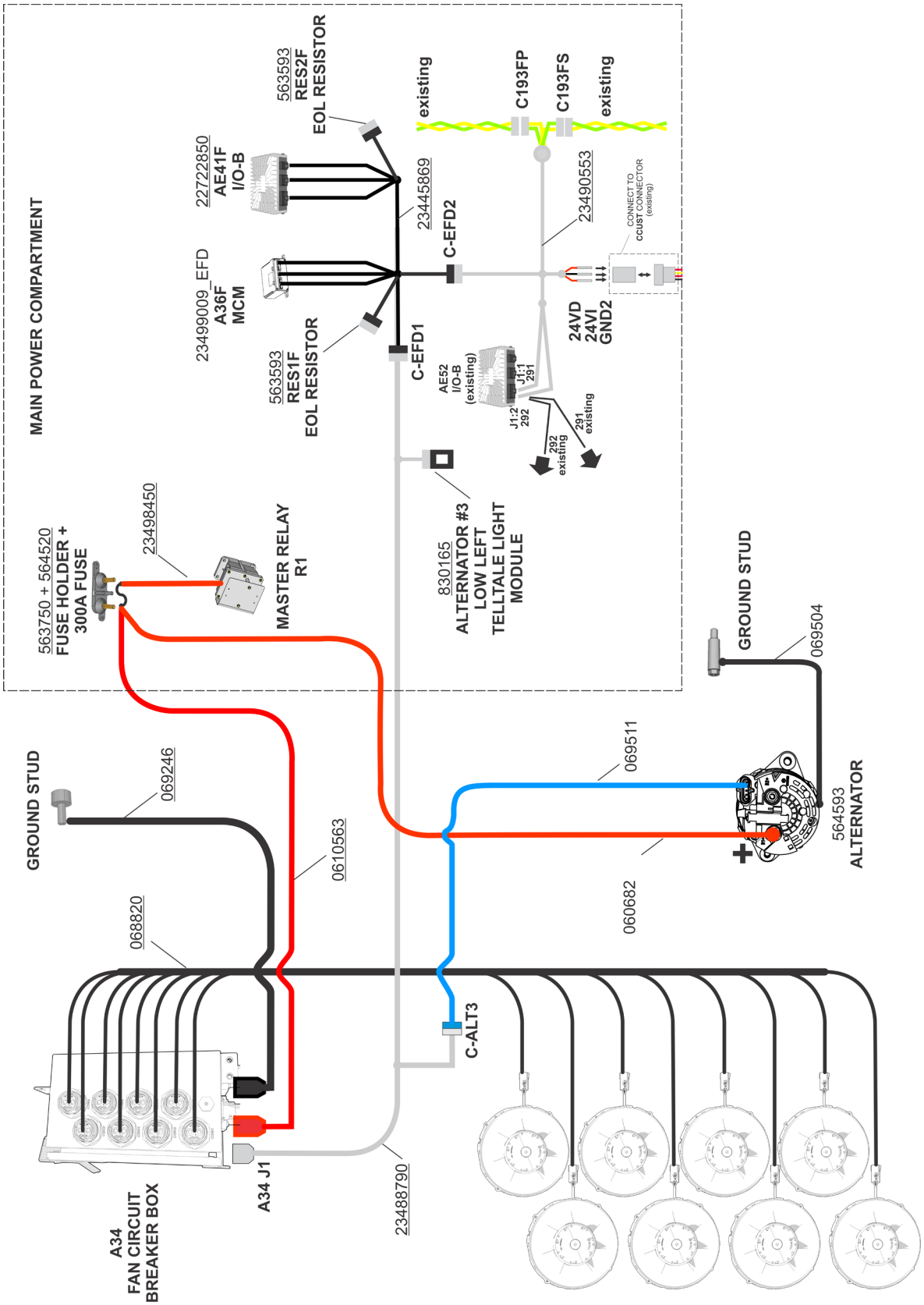

HOSE CLAMP TORQUE (coolant lines and charge air cooler)

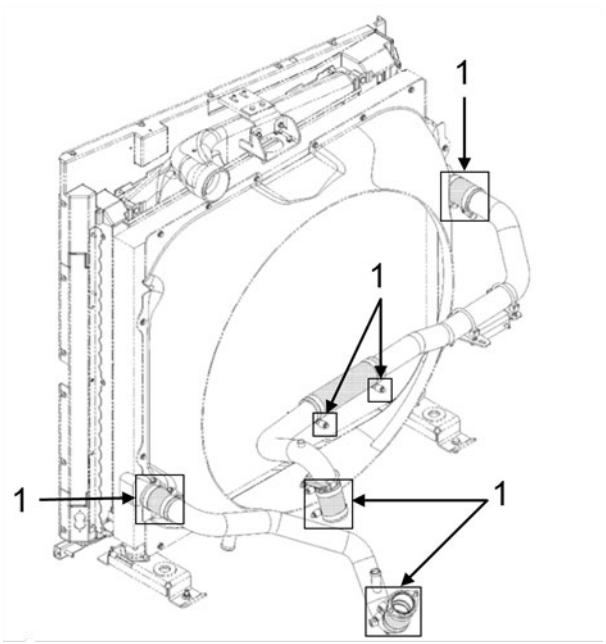

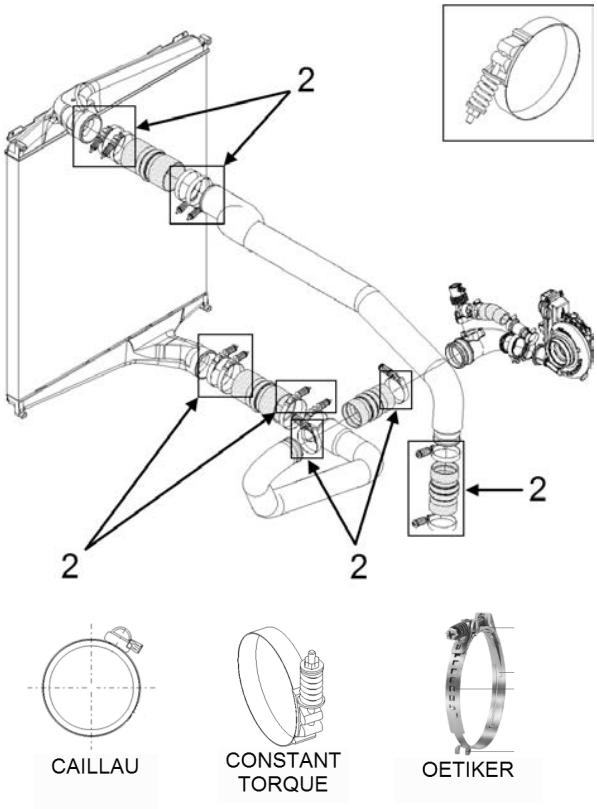

HOSE CLAMPS		
No	DESCRIPTION	TORQUE
1 (Ø 2 ½ ” or less)	Constant-Torque hose clamps - coolant lines Oetiker hose clamps – Green spring - coolant lines Oetiker hose clamps – unpainted spring - coolant lines Caillau hose clamps - coolant lines	90-100 lbf-in 12-18 lbf-in 8-9 lbf-in 30 lbf-in
2 (Ø 4 ¼ ”)	Constant-Torque hose clamp 4.25 in - charge air cooler (CAC)	4.5-5.5 lbf-ft

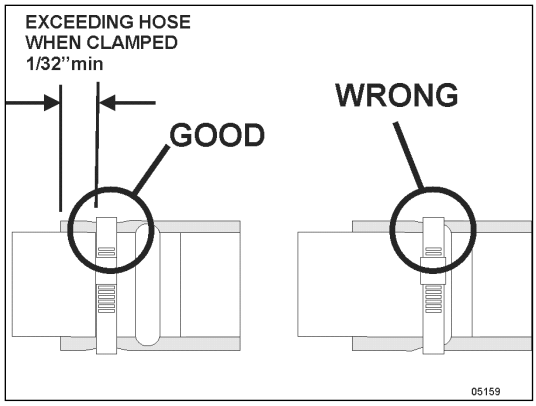
EXCEEDING HOSE
WHEN CLAMPED
1/32''min
GOOD
WRONG
05159

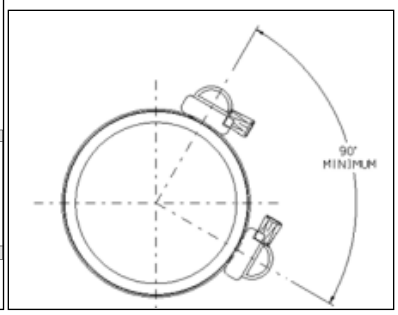
90°
MINIMUM

1. Raise the L.H. side **rear-hinged fender**.

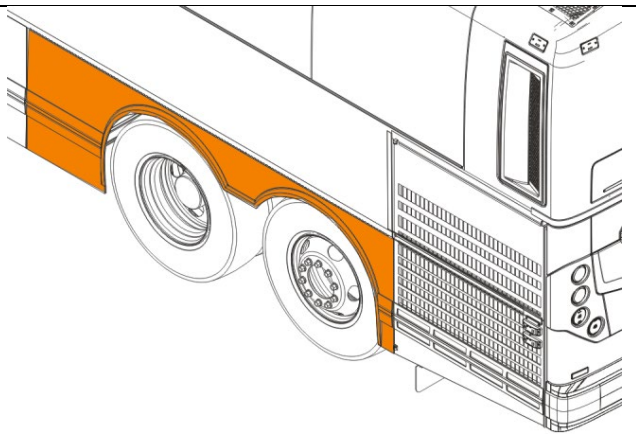

FIGURE 1

Drain the cooling system

2. Connect the coolant extractor. Use the coolant extractor to drain the coolant from the engine. An alternate method is to drain the coolant into a suitable container using the drain hose.

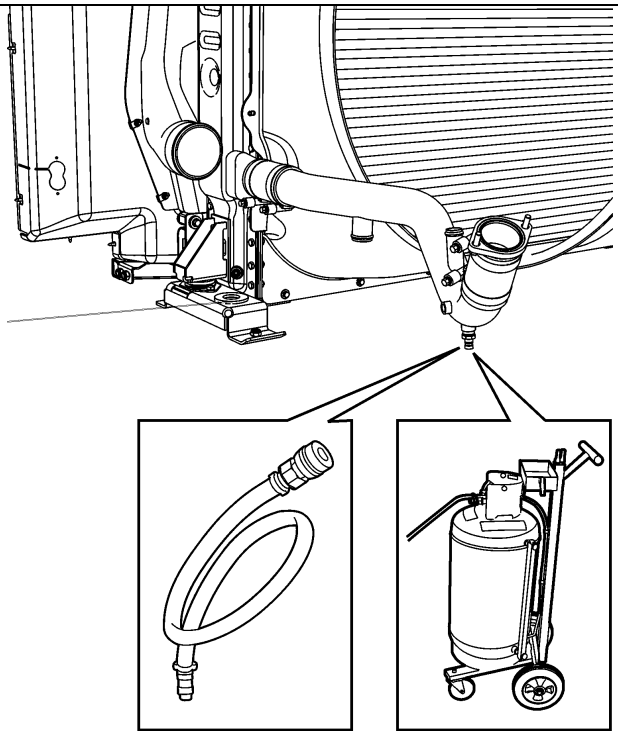

FIGURE 2

3. Unfasten two (2) cap screws and remove **access panel** located behind the tag axle L.H. side wheel.

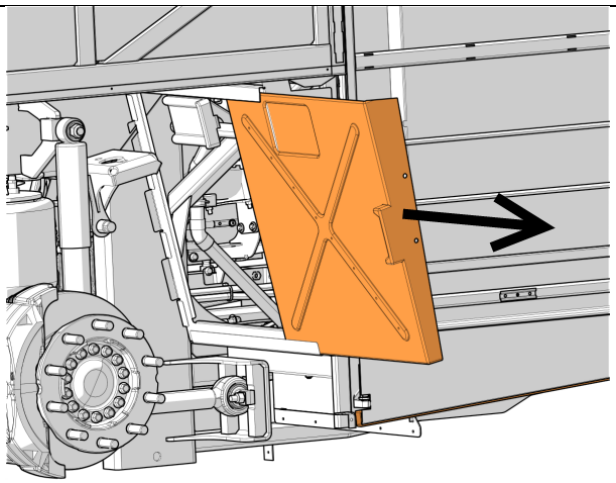

FIGURE 3

4. Open radiator door to access radiator assembly. Unfasten **upper arm assembly**.

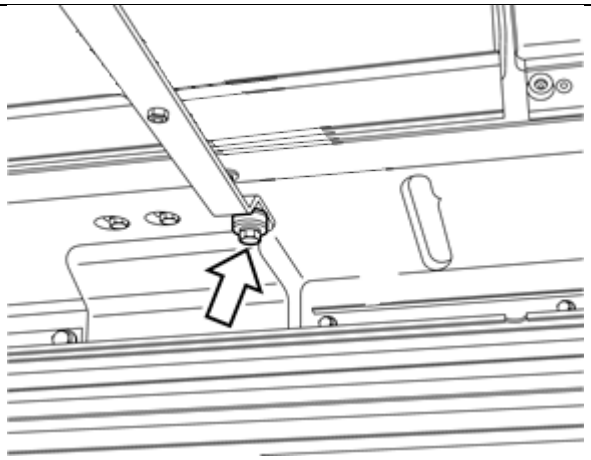

FIGURE 4

5. Remove radiator **sealing frame**.

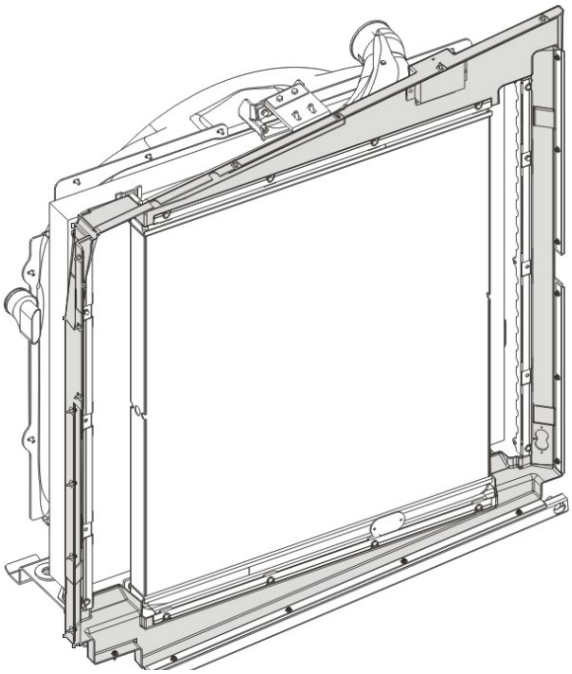

FIGURE 5

6. Remove the **rear bumper** (undo three nuts each side).

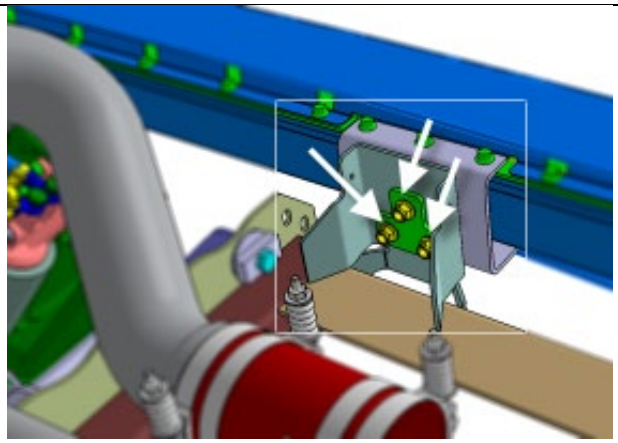

FIGURE 6

7. Remove the fan drive casting.

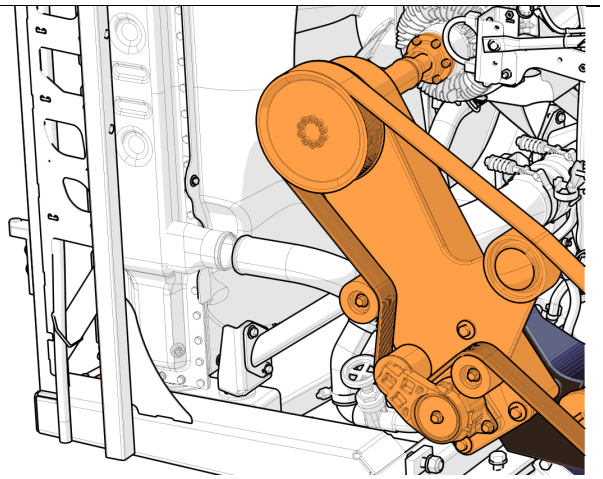

FIGURE 7

8. **Remove clamps** and then break hoses of the coolant and charge air pipes shown.

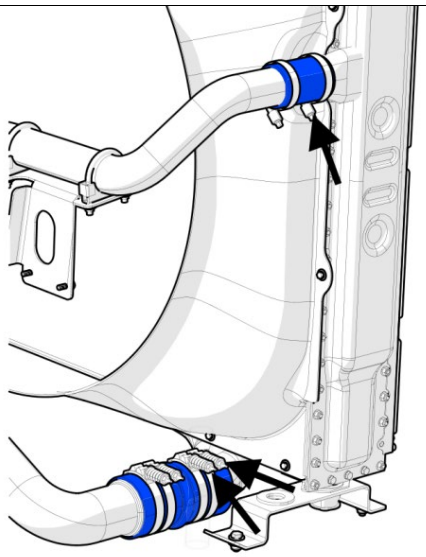

FIGURE 8

9. **Remove** the coolant and charge air hose **clamps** shown then break hoses loose.

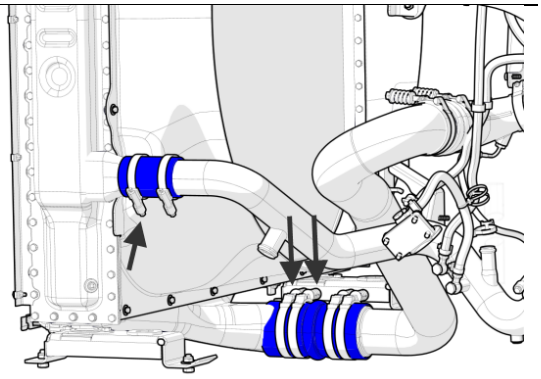

FIGURE 9

10. Remove the upper radiator assembly **support bracket**.

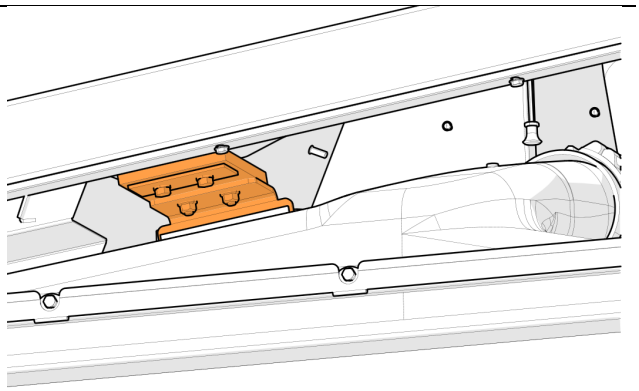

FIGURE 10

11. Remove the radiator assembly protector tube.

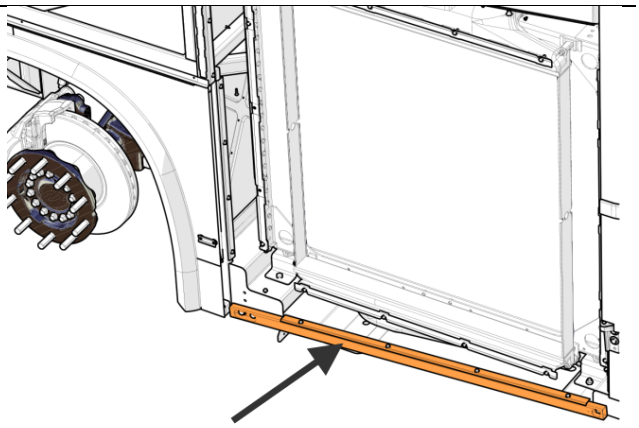

FIGURE 11

12. Disconnect the **radiator vent hose** on top of the radiator.

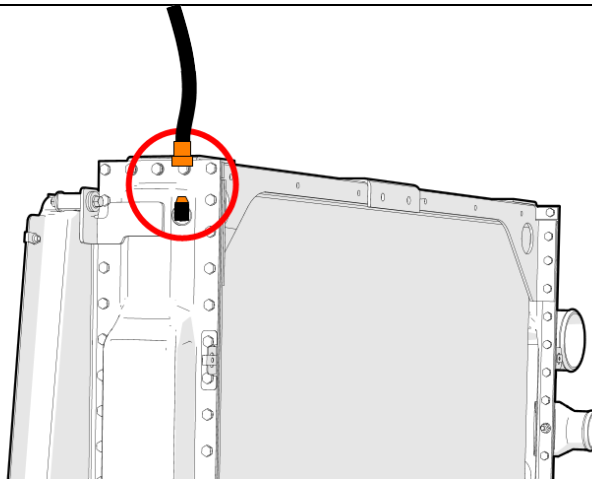

13. Disconnect **electrical connector** from the fan clutch. The remaining connector on the chassis cable will be capped and left in place.

14. Remove fan **drive shaft** fasteners at the fan clutch.

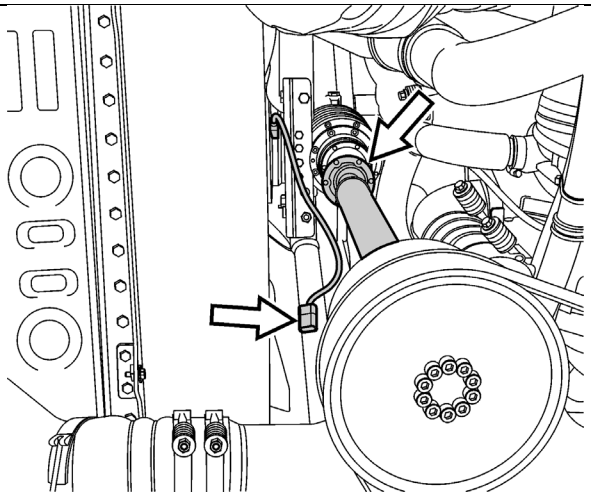

FIGURE 12

15. Open the secondary lock of **connector #561610**. Insert a **cavity plug #561783** in each of the four (4) cavities with the smallest end protruding as shown on the example at right. Close the secondary lock.

16. Cap the chassis fan clutch cable with this connector. Secure the connector on the existing harness:

    - ***nylon tie #504016 (1x)***

FIGURE 13

FIGURE 14

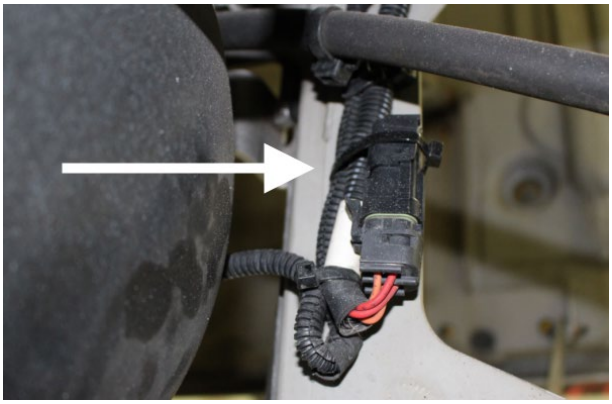

FIGURE 15

17. Unscrew all lower radiator assembly **mounting fasteners** (2 bolts on R.H. side, 2 bolts on L.H. side).

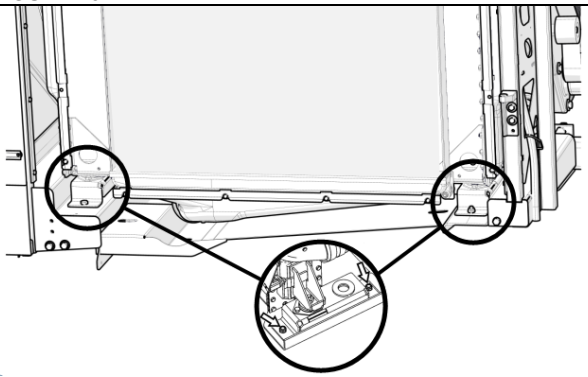

FIGURE 16

18. Position a **forklift** under the radiator assembly that is capable of safely lifting the radiator. With assistance, slide radiator assembly out and onto the forklift. Transfer radiator assembly to a secure location.

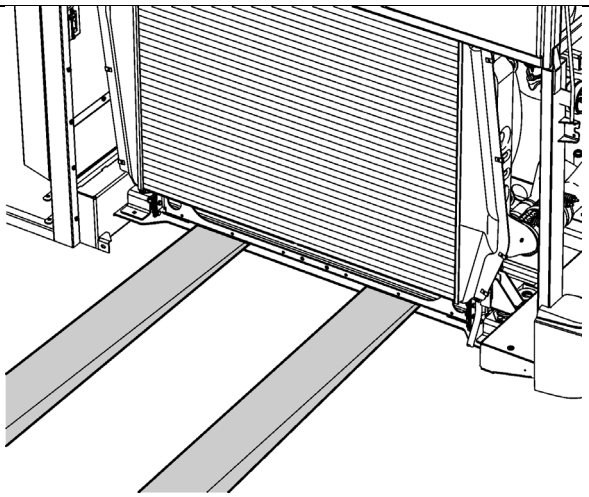

FIGURE 17

19. **Remove** the **tripod** from the radiator/CAC assembly.

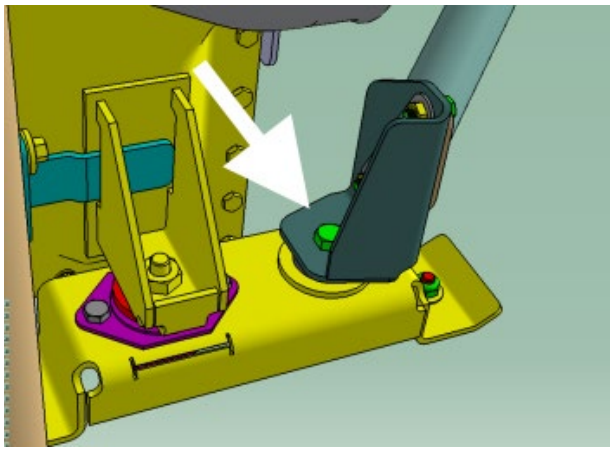

FIGURE 18

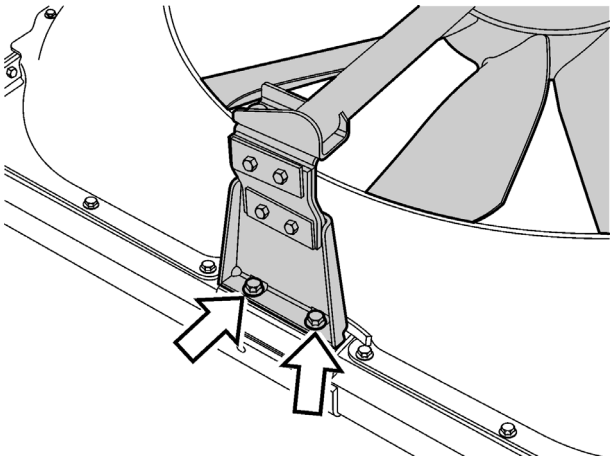

FIGURE 19

20. **Remove** the fan **shroud**.

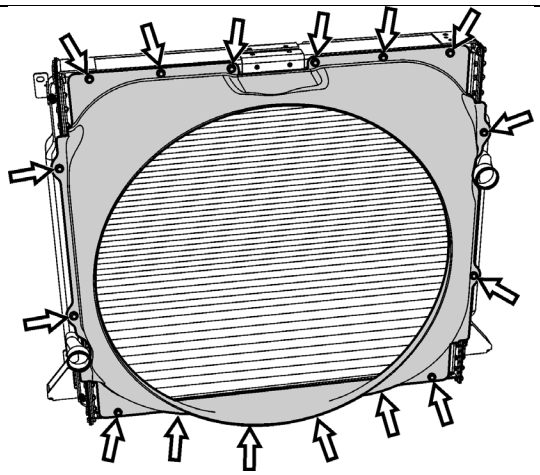

FIGURE 20

21. The new cooling pack arrangement requires being located **four inches** closer to the engine to give the needed clearance for the electric fans. For this reason, **rotate** both the radiator/CAC assembly **mounting support 180°** and reinstall.

BEFORE

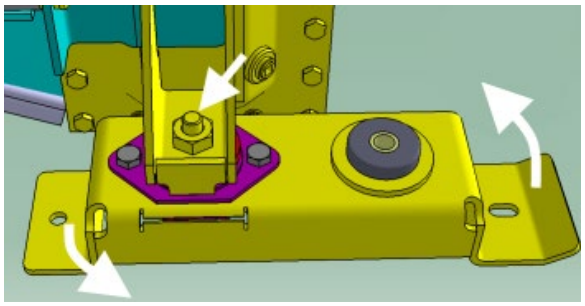

FIGURE 21: MOUNTING SUPPORT IN INITIAL POSITION

AFTER

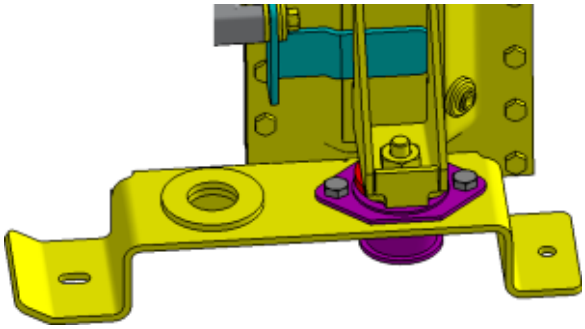

FIGURE 22: MOUNTING SUPPORT AFTER 180° ROTATION

22. Drill two (2) new holes for both cooling pack mounting supports at 1/2 inch (13 mm) from the previous holes, towards the engine.

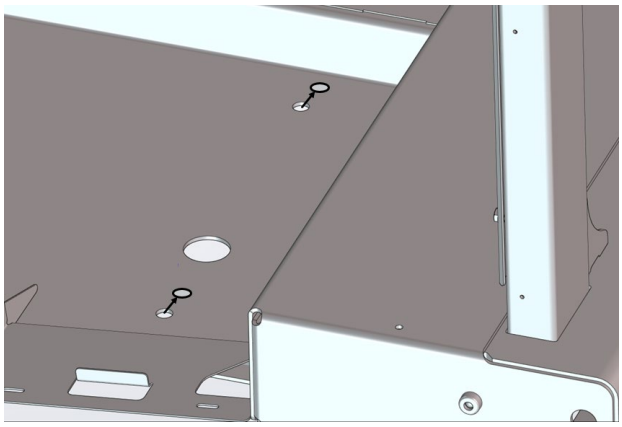

FIGURE 23: NEW HOLES FOR THE COOLING PACK MOUNTING SUPPORTS

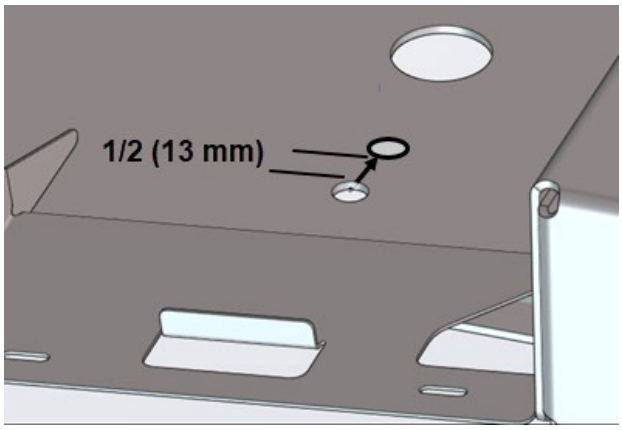

FIGURE 24: NEW HOLE FOR THE COOLING PACK MOUNTING SUPPORTS (DETAIL VIEW)

23. Remove the exhaust pipe section located between the DPF and the flexible section.

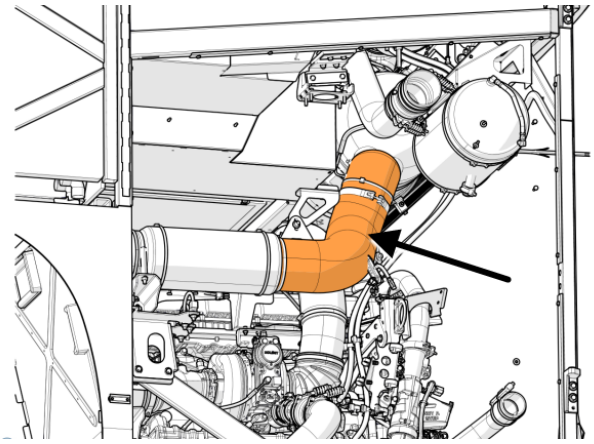

FIGURE 25: REMOVE THIS EXHAUST PIPE SECTION

24. On the engine hot side, remove the following pipes:
    - radiator outlet pipe
    - CAC inlet pipe

Keep the fittings found on the radiator outlet pipe for reuse

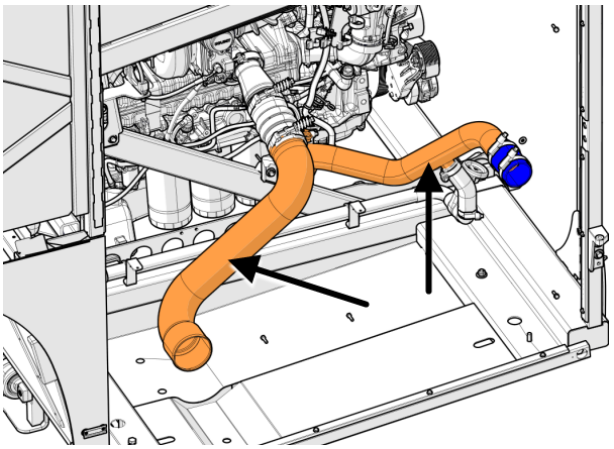

FIGURE 26

25. Undo the two (2) V-band clamps and then remove the engine intake elbow.

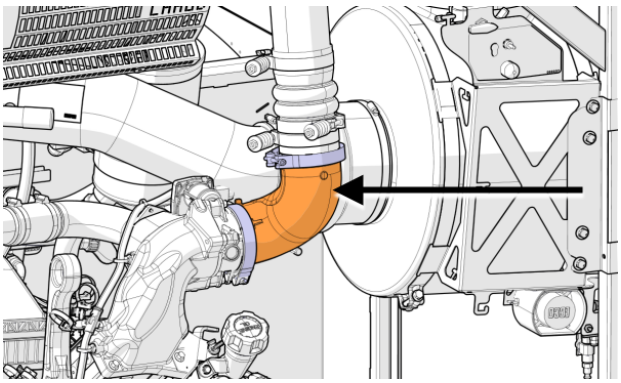

FIGURE 27: REMOVE THE INTAKE ELBOW

26. Remove the pipe (item A) section located downstream of the engine air filter. Prior to do so, disconnect the air compressor fresh-air inlet pipe (item B) connected to pipe A.

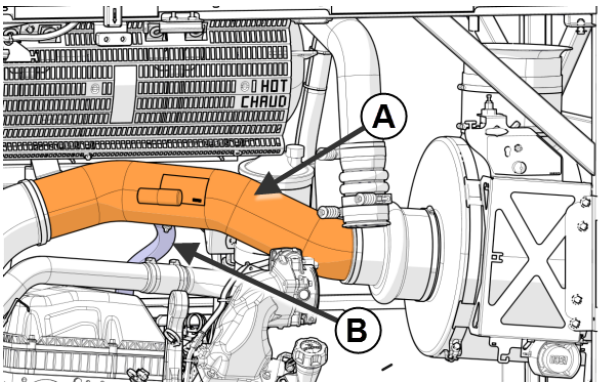

FIGURE 28

27. On the engine hot side, remove the radiator inlet pipe.

KEEP THE BLUE **HOSE**, IT WILL BE USED AS PROTECTIVE SHEATH

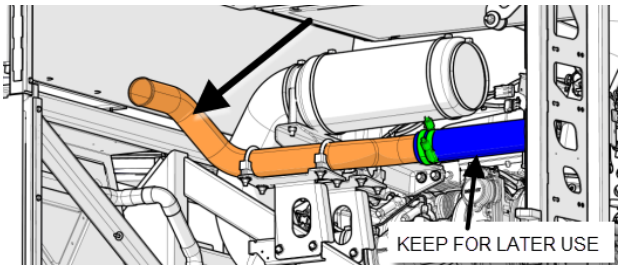

FIGURE 29

28. Remove and discard the CAC outlet pipe. It is possible to remove this pipe by taking it out from the left side (hot side)

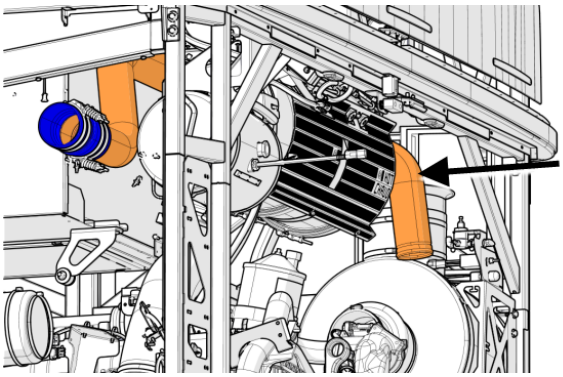

FIGURE 30

FIGURE 31

FIGURE 32

FIGURE 33

29. Replace the existing coolant surge tank support with the coolant tank support #053040 included in the kit. Use the existing hardware. Add one (1) new washer **#500321** and one (1) new nut #**5001983**.

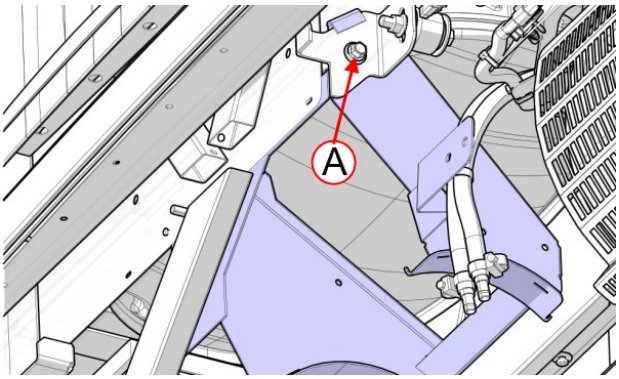

FIGURE 34

A: REUSE EXISTING HARDWARE

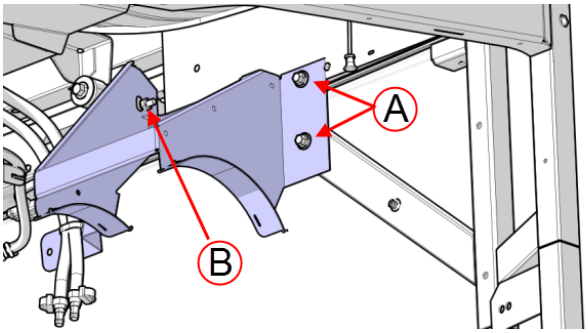

FIGURE 35

A: REUSE EXISTING HARDWARE

B: NEW WASHER #500321, NEW NUT #5001983.

30. Depending on the vehicle model year, drilling of the mounting hole shown might be necessary (see image at right).

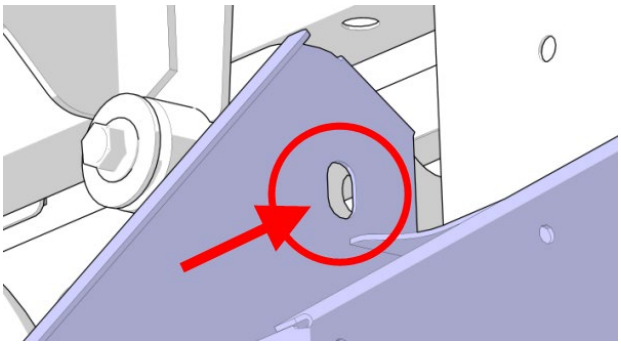

FIGURE 36

31. Reinstall the surge tank, slightly moved to the right in comparison with the former installation.

Note the T-bolt band clamp now located on the other side of the filler neck on the image at tight.

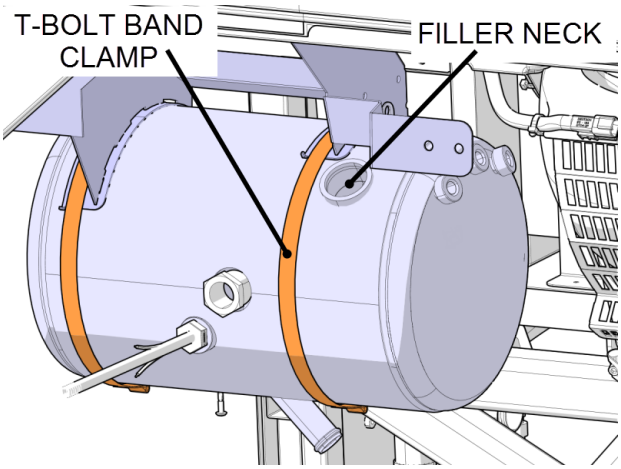

FIGURE 37

32. The area identified on the images at right will be in interference with the radiator. For this reason, some modifications are necessary to eliminate the interference.

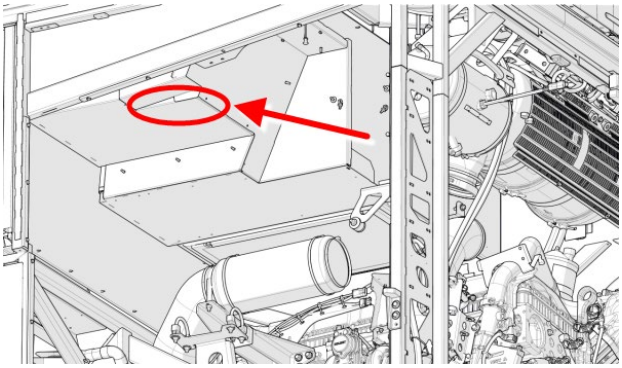

FIGURE 38

33. Cut the sheet metal along the red lines as shown on the image at right.

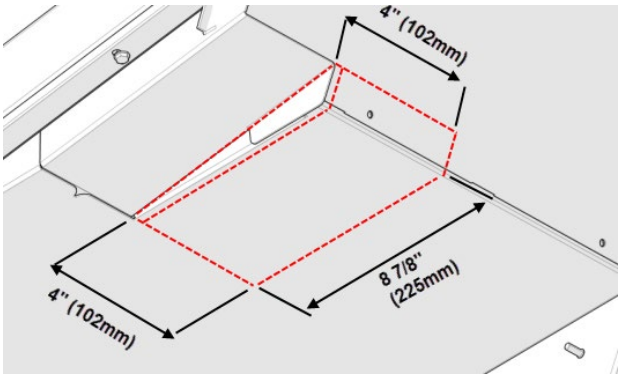

FIGURE 39

FIGURE 40

34. Cut along the red line shown on the picture to separate the sheet metal from the steel fold.

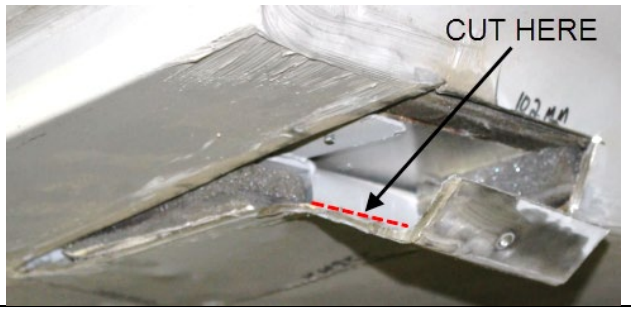

35. The bolt seen on the picture at right secures the last R.H.seat. This bolt is too long and must be changed for a shorter one.

FIGURE 41

36. Unscrew the bolt identified on the picture and change it for screw **#500594.**

FIGURE 42

37. Cut the steel fold shown on the picture at right.

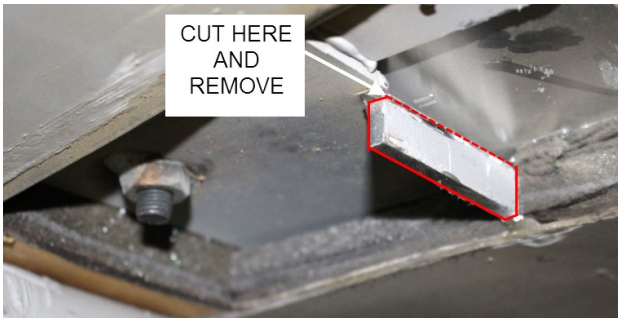

FIGURE 43

38. Fold over the sheet metal as shown on the picture and secure to the structure using the following hardware:
    - ***rivet #504117 (5x)***
39. Finally, apply sealant to assure water tightness.

FIGURE 44

40. Remove all the drive belts mounted on the crank pulley.

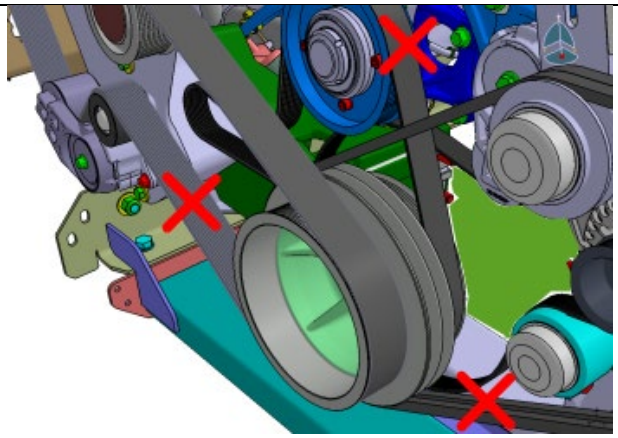

FIGURE 45

41. Remove the crank pulley. Discard the 6 bolts.

NOTE: On vehicles prior to serial G-5986 (2016) equipped with a trailer hitch, <u>keep the existing crank pulley (14 ribs)</u> in place.

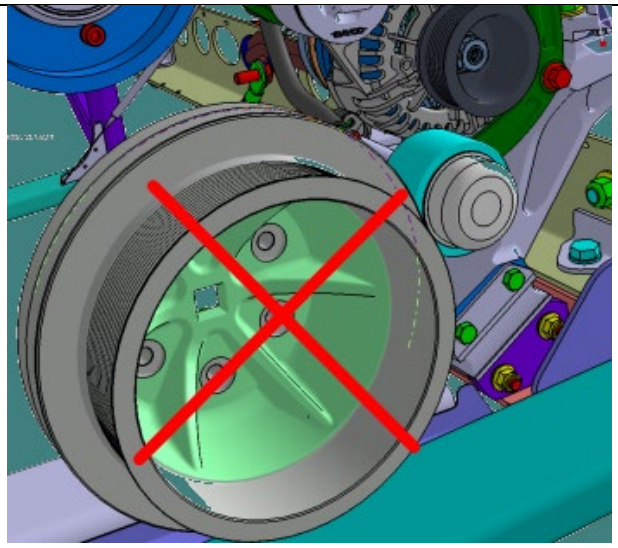

FIGURE 46

42. Remove the rust, clean and prepare the surface on the vibration damper as shown. Work the surface to achieve a smooth finish.

FIGURE 47

FIGURE 48

43. Properly support the engine as one of the engine support will be interchanged in the upcoming steps.

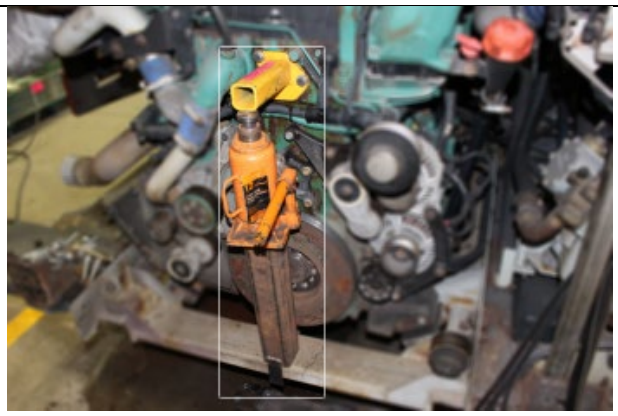

FIGURE 49

44. Remove the two (2) coolant hoses shown on the image. Keep the two (2) banjo fittings for later use.

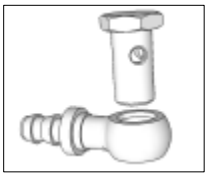

BANJO FITTING

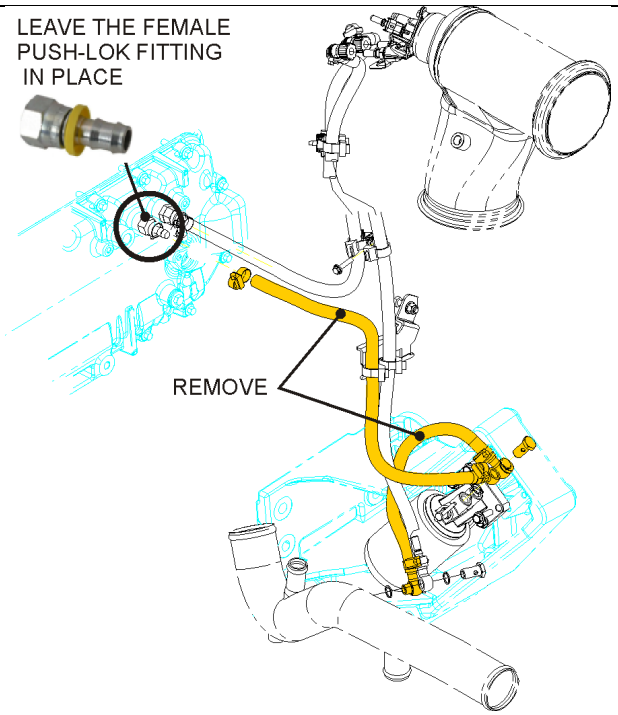

FIGURE 50

45. Remove the L.H. rear engine support (10 bolts). Keep the hardware for reinstallation.

Take note that the water pump belt idler/tensioner assembly will be reused as is. Do not take apart tensioner or idler.

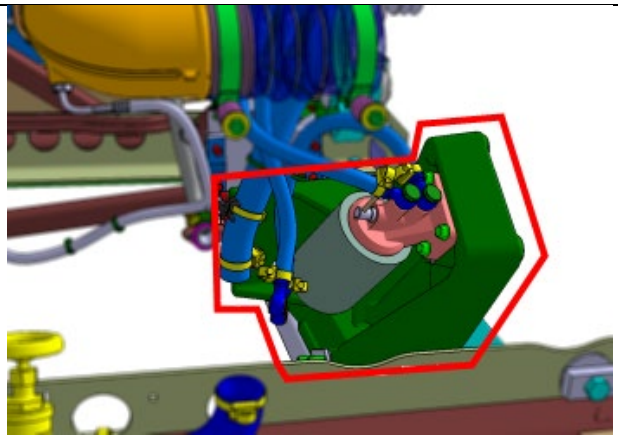

FIGURE 51: L.H. REAR ENGINE SUPPORT

46. Remove the water pump idler/tensioner assembly from the former engine mount. To do so, unscrew three (3) bolts from the back of the engine mount.

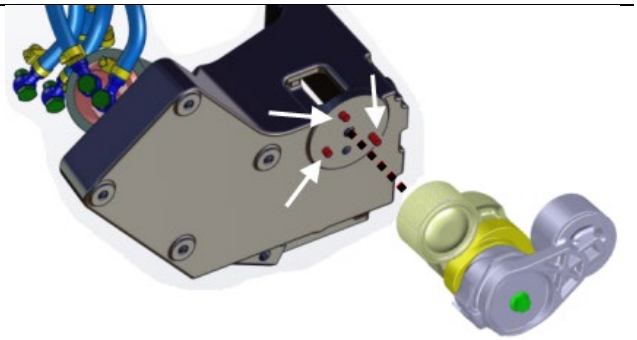

FIGURE 52

47. Reinstall idler/tensioner assembly as a unit on the new L.H. engine mount #012942.

    Mount the idler/tensioner assembly using three (3) cap screws #5001643

    Tighten to 14-17 lb-ft

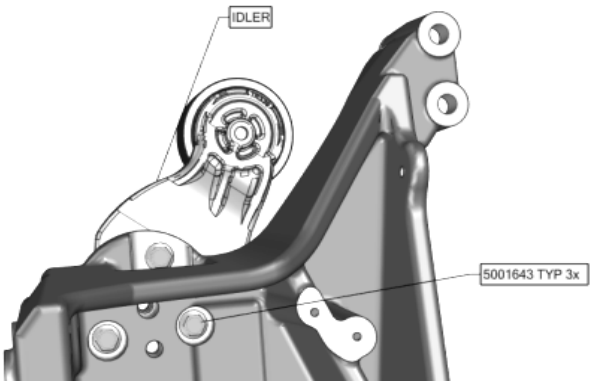

FIGURE 53

48. Install the new engine mount #012942 using seven (7) M14 screws saved from the former engine support with this exception of:

    - ***Ground stud #012921 (1x) and nylon insert NYRT nut #5001665 (1X)***
    - ***Isolator cap screw #5001940 (2X)***
    - ***Nut #5001761 (2X)***

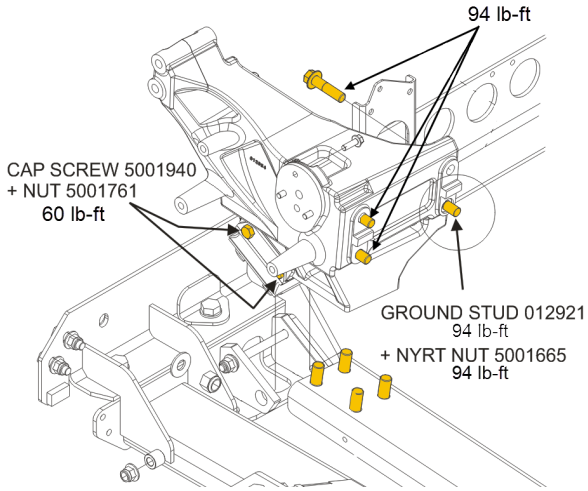

FIGURE 54

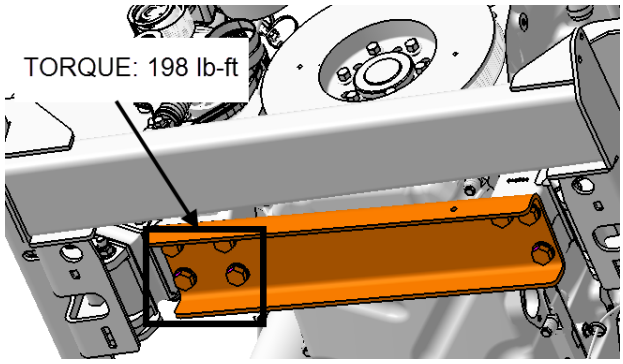

FIGURE 55: FOUR (4) SCREWS UNDER THE REINFORCEMENT CHANNEL

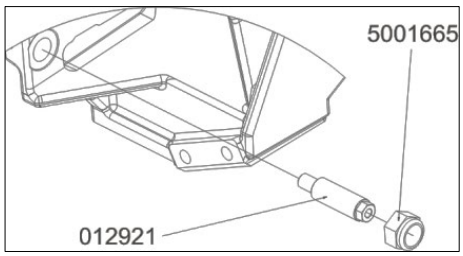

FIGURE 56: REAR VIEW – GROUND STUD

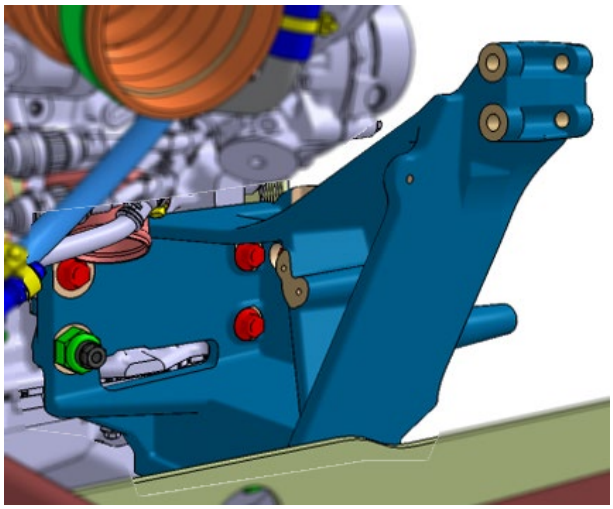

FIGURE 57

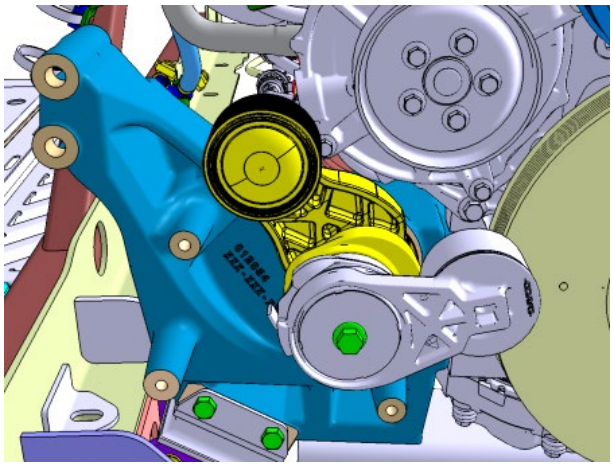

FIGURE 58

49. Install the new crank pulley using six new bolts #5001296. Use blue Loctite on the bolt threads.

    Torque to 26 lb-ft in this numerical order: 1, 2, 3, 4, 5, 6, 1

    Once done perform a final tightening to the value of 66 lbf-ft.

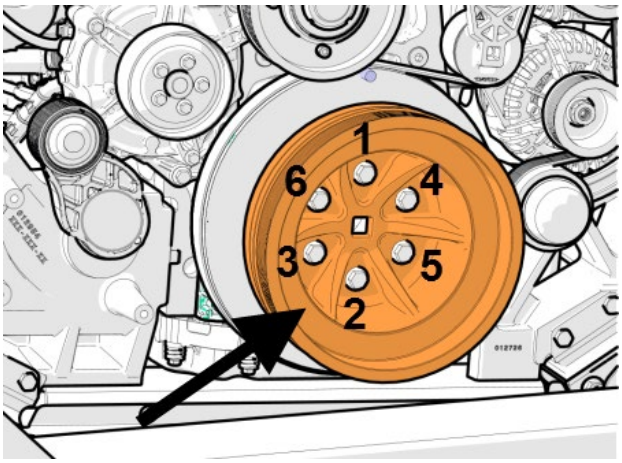

FIGURE 59

50. Reinstall the water pump drive belt.

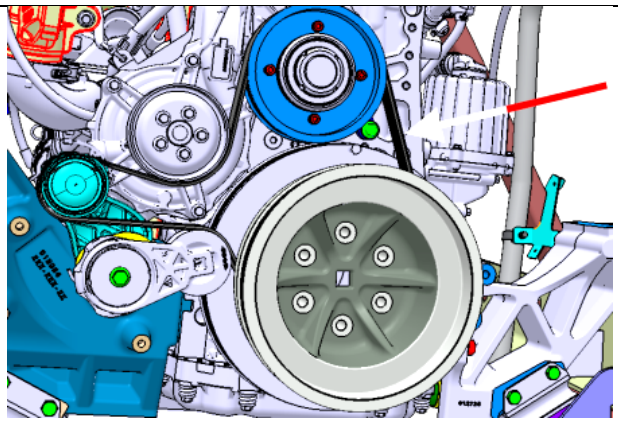

FIGURE 60: WATER PUMP DRIVE BELT

51. Reinstall the A/C compressor drive belts.

52. Install the idler support #011213 using three (3) screws #5001799. At the same time, install the alternator lower bracket #060102.

screws #5001799 prescribed torque: 48 lbf-ft

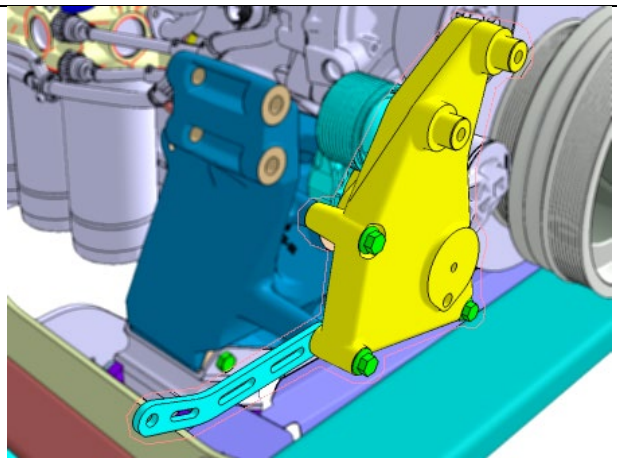

FIGURE 61: BRACKET #060102

53. Make a smooth round clearance in the engine cradle to allow required space for the alternator lower bracket #060102 installed at the previous step. Carefully work the edge to achieve a smooth finish and contour.

    Measurements: ↔ 2″, ↕¾″

    Apply paint to protect the metal against corrosion

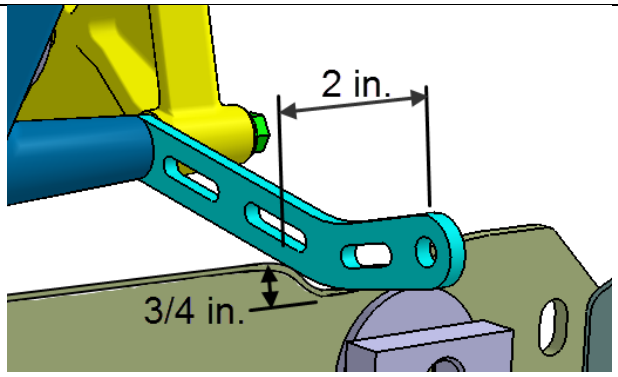

FIGURE 62

54. Install the new **idler #012349** with one (1) screw #5001786 and one (1) washer #5002008.

    Tighten to 59 lb-ft

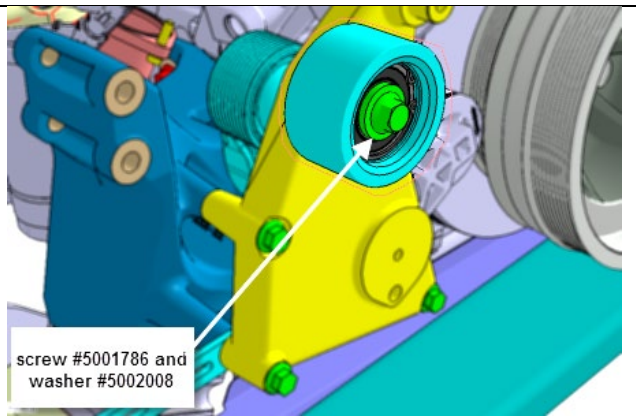

FIGURE 63

55. Install the dust cap #453076.

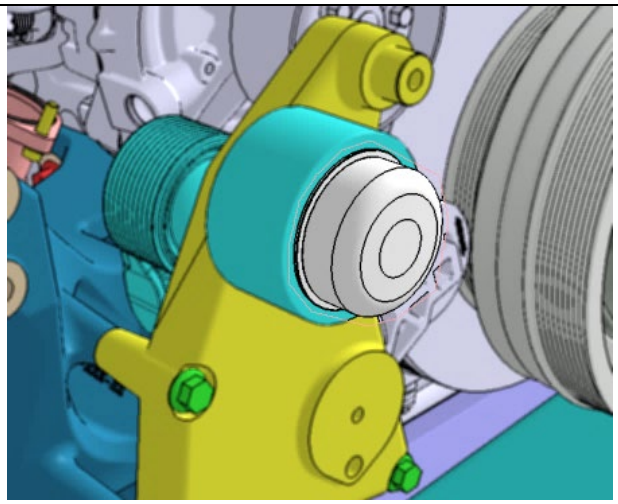

FIGURE 64

FIGURE 65

56. Install the new alternator belt tensioner #510991. Secure with one (1) screw #5001799 on which **blue Loctite** is applied on the threads.

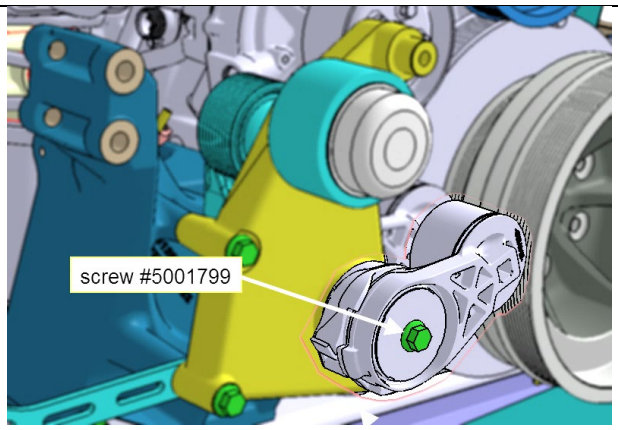

FIGURE 66: TENSIONER MOUNTING SCREW TORQUE : 48 lb-ft

57. Apply anti-seize compound (Prevost p/n: 680335) inside the alternator mounting ears and inside the sleeves found on the support attached to the engine.

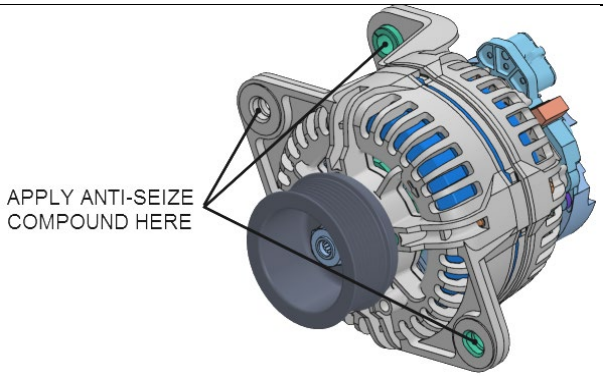

FIGURE 67

FIGURE 68

58. Install the alternator.

A: screw #502950 & nut #5001728 (torque: 82 lbf-ft)

B: screw #5001800 & nut #5001930 (torque: 48 lbf-ft)

C: apply blue Loctite and then torque to 48 lbf-ft

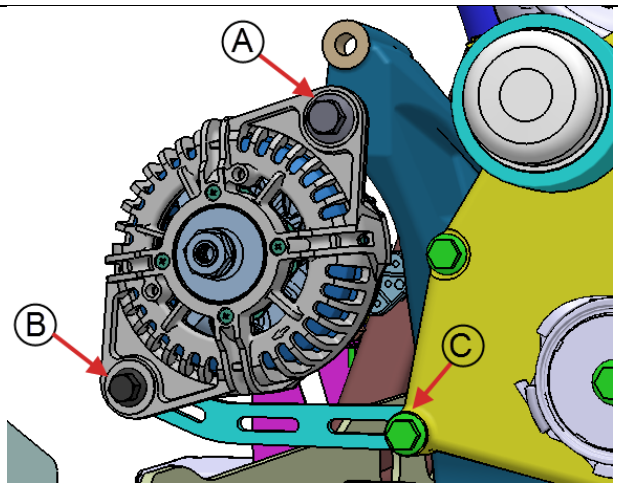

FIGURE 69

Simultaneously, install the alternator "power cable" support #050266 to the alternator as shown on the picture.

FIGURE 70

59. Install the alternator pulley #0600265 (for further details, refer to Maintenance Information IM16-17).

Use washer #500449 and flanged nut #21429955

***torque:* 75 lbf-ft**

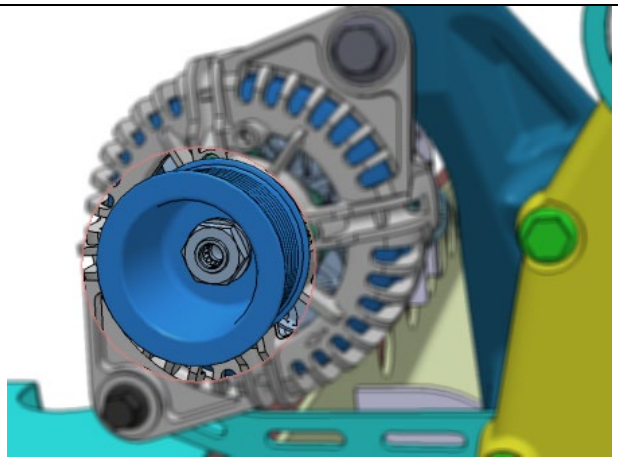

FIGURE 71

60. Install the alternator drive **belt** #506026.

    NOTE: Use belt #506080 instead if the original crank pulley is still in place (vehicle equipped with a trailer hitch).

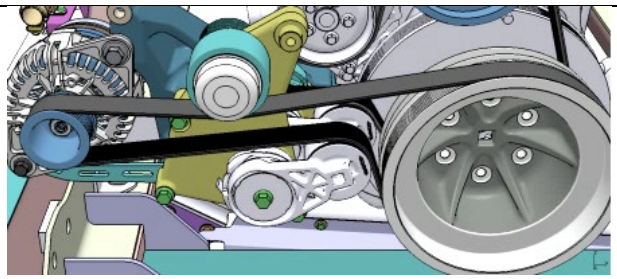

FIGURE 72

61. Remove former belt routing decal and replace with **decal #010060**.

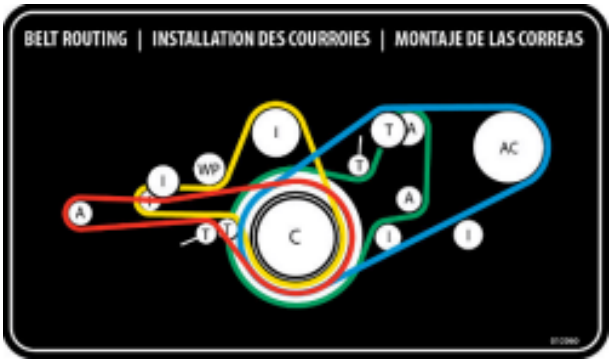

FIGURE 73

62. On the alternator, install the stud adapter #060297 at **B1+** stud terminal.

    torque: 11 lbf-ft

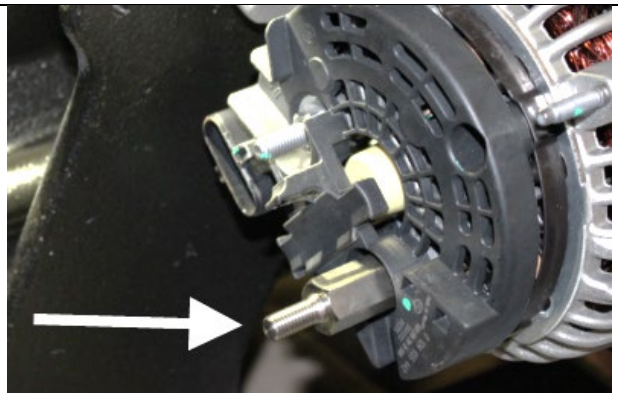

FIGURE 74

63. Perform the “Multiplex Modules Disconnection Procedure Prior to Welding” found in your vehicle Maintenance Manual, Section 00: General.

64. Weld the new coolant filter support #050265 on the engine cradle.

23 1/2 inches (597 mm) from the end of the cradle

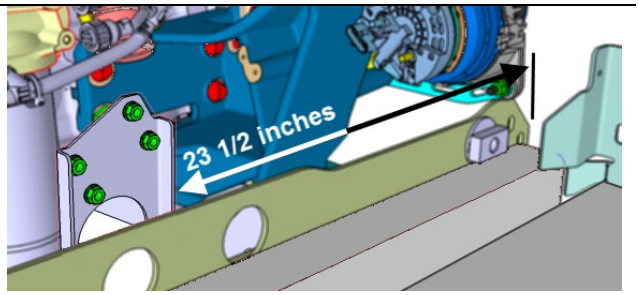

FIGURE 75

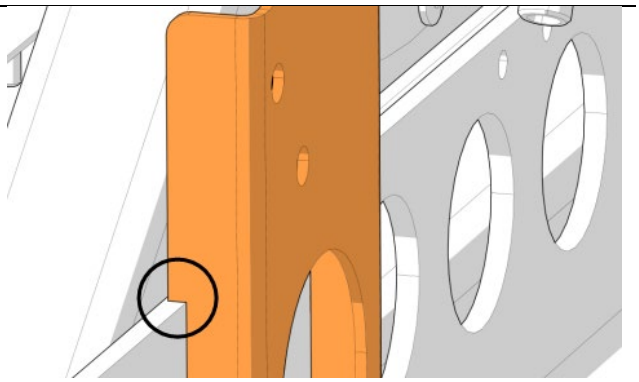

FIGURE 76

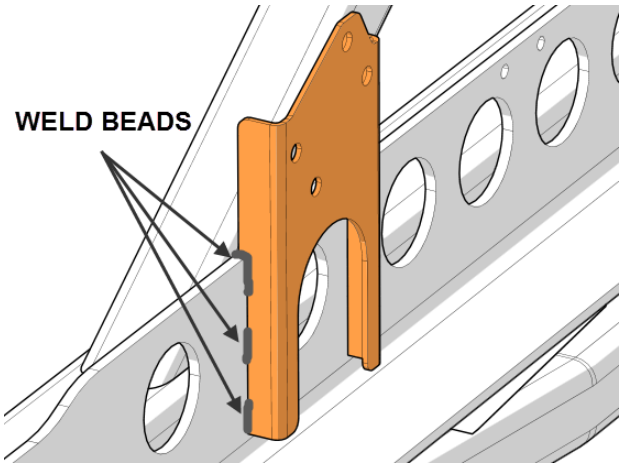

FIGURE 77

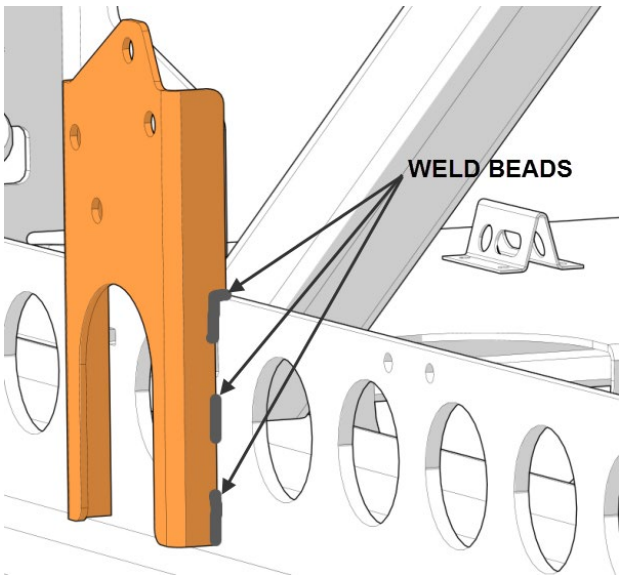

65. As a preparation for **welding**, use a grinder with abrasive disc to remove some paint to reach bare metal. Weld the **ground stud** #380360 centered on the beam, at 16 inches (406 mm) from the vertical member beam end.

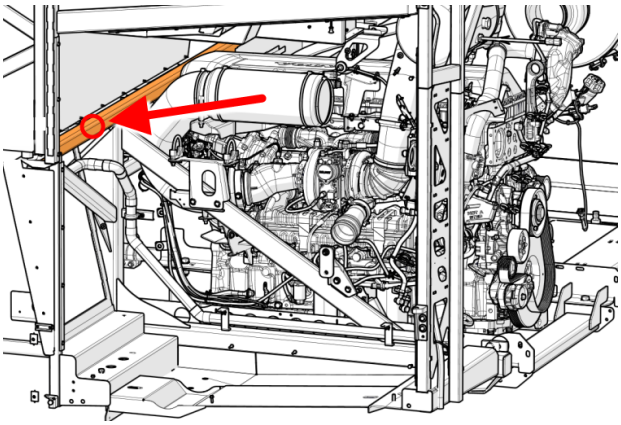

FIGURE 78

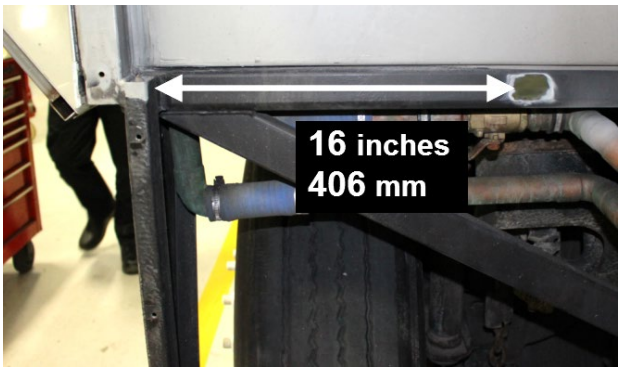

FIGURE 79

FIGURE 80: GROUND STUD #380360

66. Apply black paint to the area surrounding the ground stud and the ground stud circular base. **DO NOT** apply paint on the electrical contact surfaces.

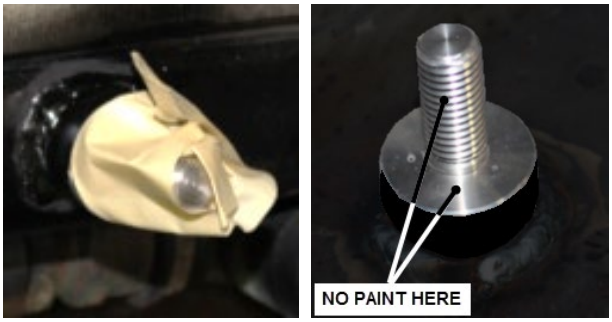

FIGURE 81: GROUND STUD #380360

67. Install a tie mount #509490 with one screw #502686 at the back of the L.H. engine mount.

FIGURE 82

68. Install the alternator ground cable #069504. Secure to the ground stud on the alternator using washer #502573 and nut #5001182.

torque: 6 lbf-ft

69. Secure the alternator ground cable to the previously installed tie mount using one nylon tie #509491.

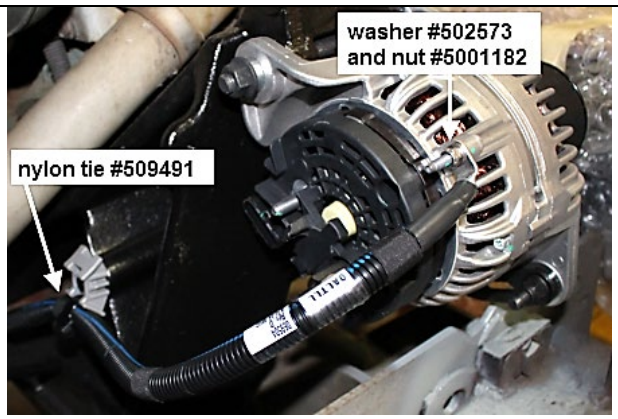

FIGURE 83

70. Secure the alternator ground cable #069504 to the previously installed ground stud on the L.H. engine mount.

Use screw #502719 & washer #5001935

torque: 20 lbf-ft

Protection against corrosion. Apply Color Guard rubber coating on the ground stud once the ground cable is hooked up.

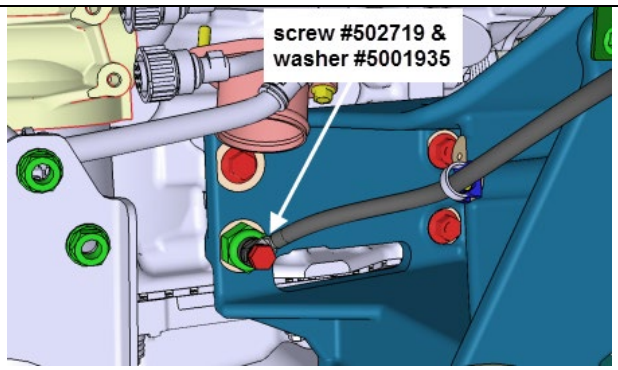

FIGURE 84

71. To the previously installed coolant filter support, install the filter holder recovered from the former installation.

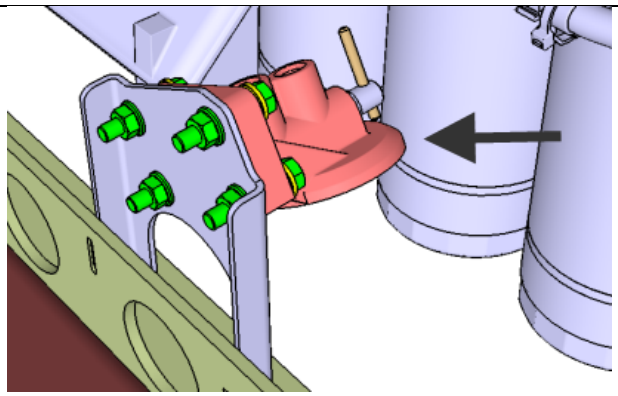

FIGURE 85

72. Install the new coolant filter included in the kit onto the filter holder. Check the clearance between the filter and the near hose clamps of the coolant pipe leading to the transmission oil cooler.

73. Transfer the drain plug and the coolant extractor quick connect fitting saved from the old radiator outlet pipe.

Apply Loctite 567 Thread Sealant prior installation of the fittings

74. Install the new radiator outlet pipe #050331. Reinstall with the flexible hose #053617 and four (4) hose clamps #992089. Use steel wire to hold the end of the pipe until the radiator is installed if required.

A: # 992089 hose clamp (4x); torque: 30 lbf-in

B: drain plug

C: coolant extractor quick connect valve

D: # 053617 silicone hose

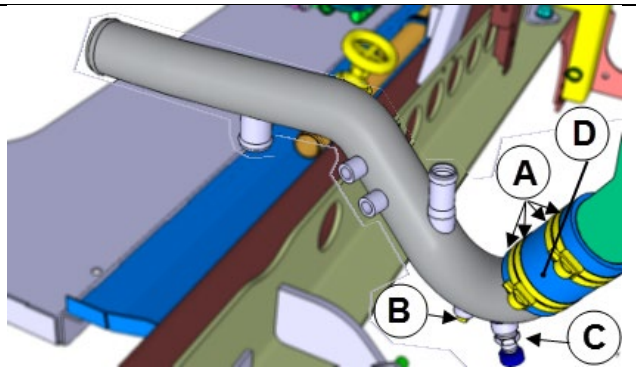

FIGURE 86

75. Connect the elbow between the copper heater line and the new radiator outlet pipe.

    A: #992086 hose clamp (1x)

For proper clamp torque, refer to HOSE CLAMP TORQUE on page 14.

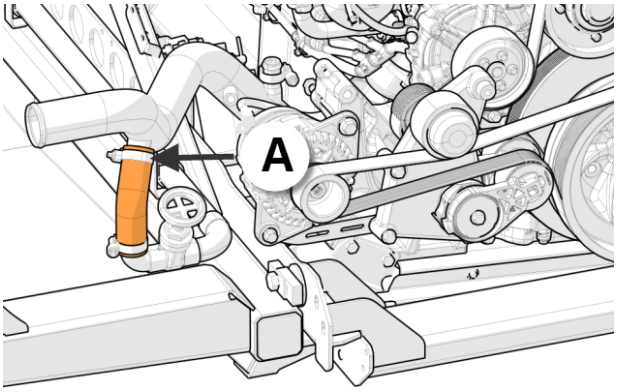

FIGURE 87

76. Using blue flexible hose #052366, prepare two new short hoses for the coolant filter.

a) Cut two sections of blue flexible hose, one **13 inches** long and a second one, **27 inches** long.

b) Use the banjo fittings **recovered** from the previous installation.

A : hose clamp #992081 (4x)

B: banjo fitting copper washer #507657 (6x)

hose clamp torque: 30 lbf-in

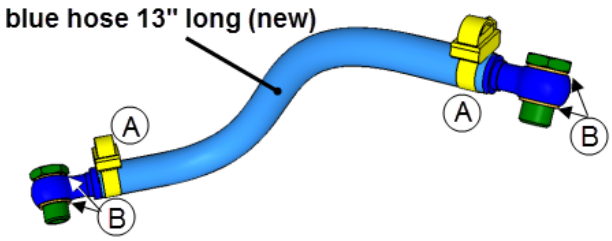

FIGURE 88

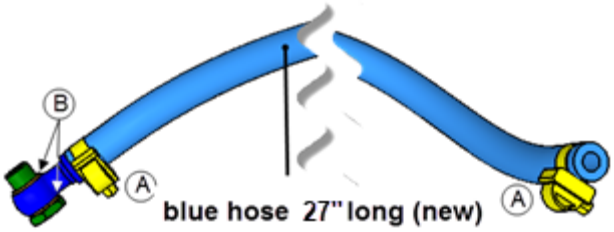

FIGURE 89

77. Install the" 13″ and 27″ long hoses prepared at the previous step as shown on the images.

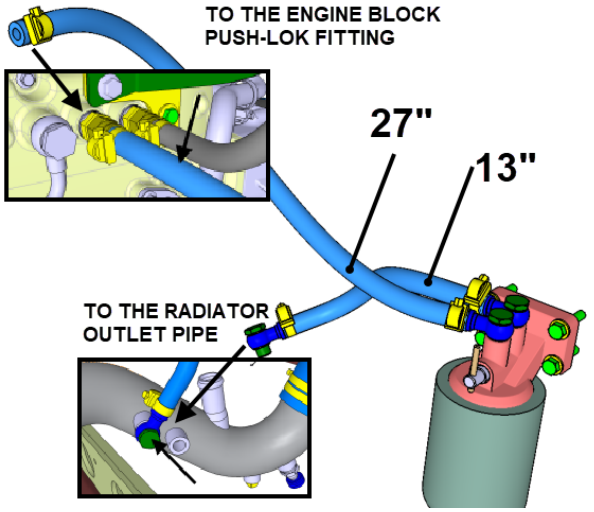

FIGURE 90

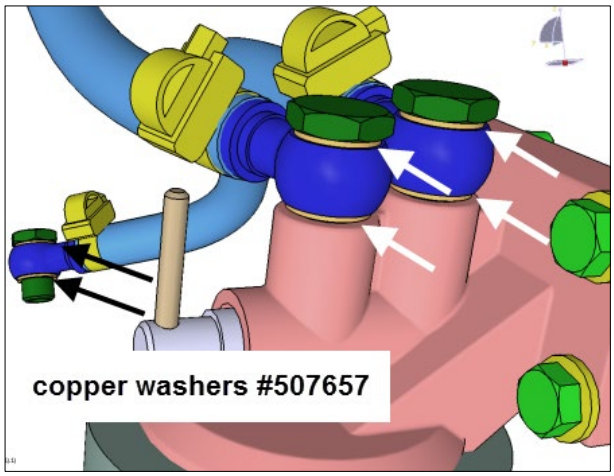

FIGURE 91

78. Secure the 24″ long hose as shown on the image.

A : nylon tie # 509491

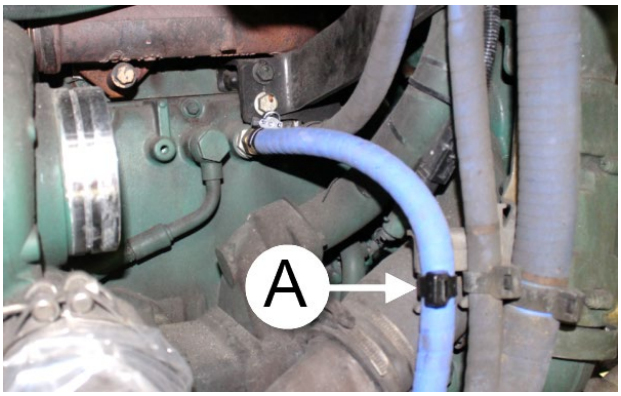

FIGURE 92

79. Connect the DEF injector coolant line return hose to the radiator outlet pipe.

Use two (2) new banjo fitting copper washer #507657

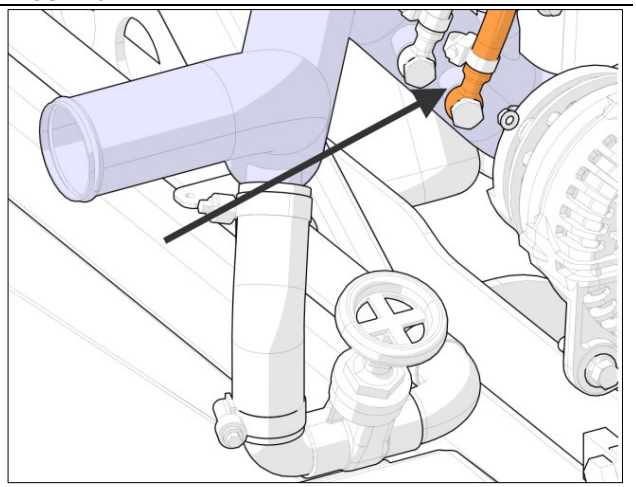

FIGURE 93: DEF INJECTOR COOLANT LINE RETURN HOSE

80. Connect the coolant line that comes from the surge tank to the radiator outlet pipe. Use one (1) hose clamp #992086.

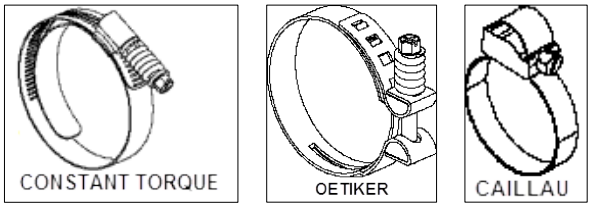

TORQUES:

Caillau clamps : 30 lbf-in

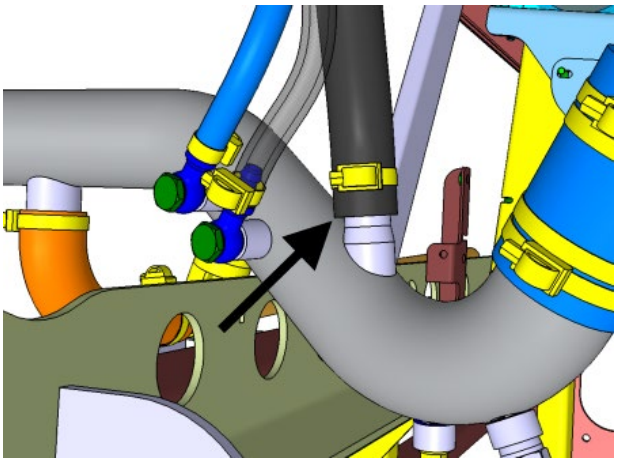

FIGURE 94

81. Secure the coolant hoses together using the following hardware.

A : nylon tie # 509491 (2x)

B:swivel mount #504751 (1x)

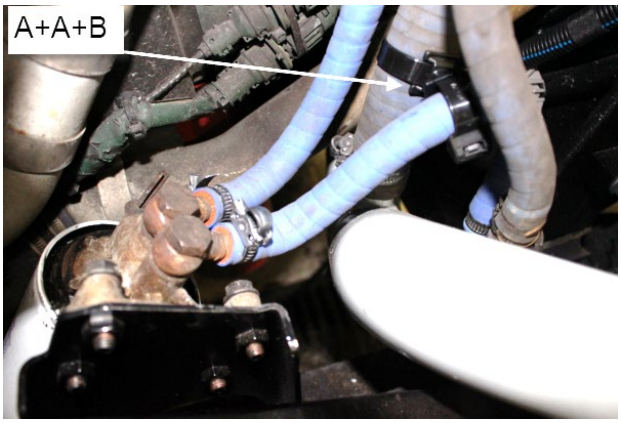

FIGURE 95

82. Secure the coolant hoses together using nylon ties.

A: « handcuff » nylon tie #N37749 (2x)

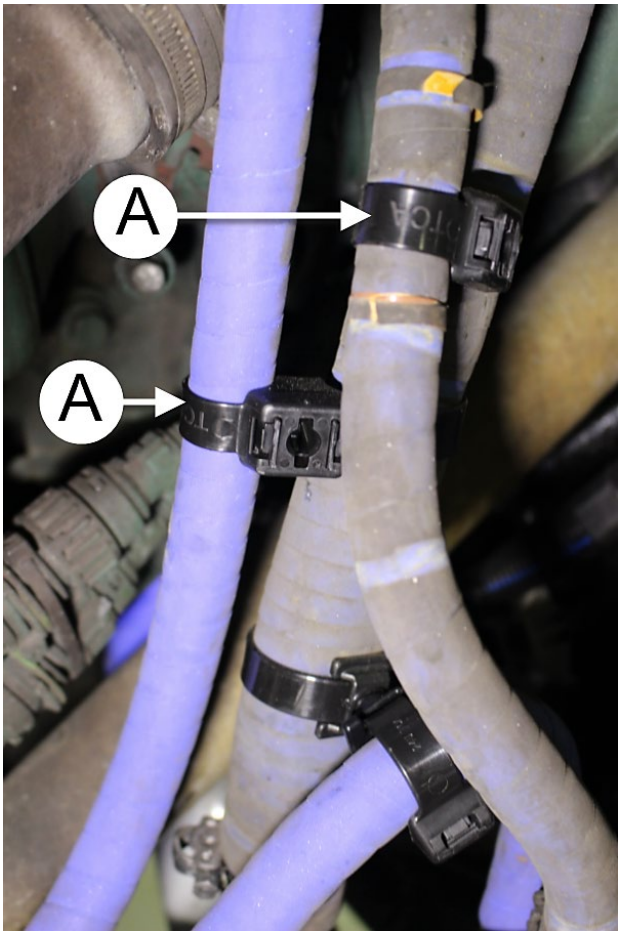

FIGURE 96

83. Hang the engine intake pipe #050308 in place.

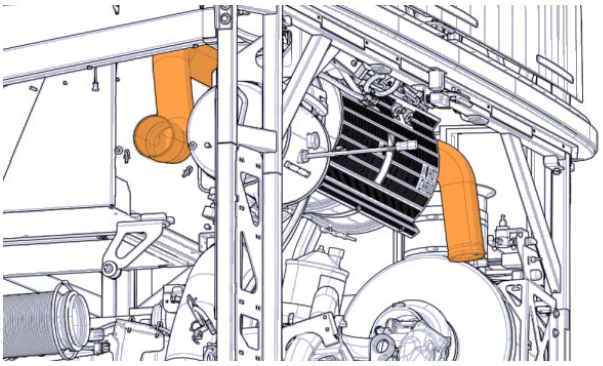

FIGURE 97

FIGURE 98: ENGINE INTAKE PIPE SUPPORT

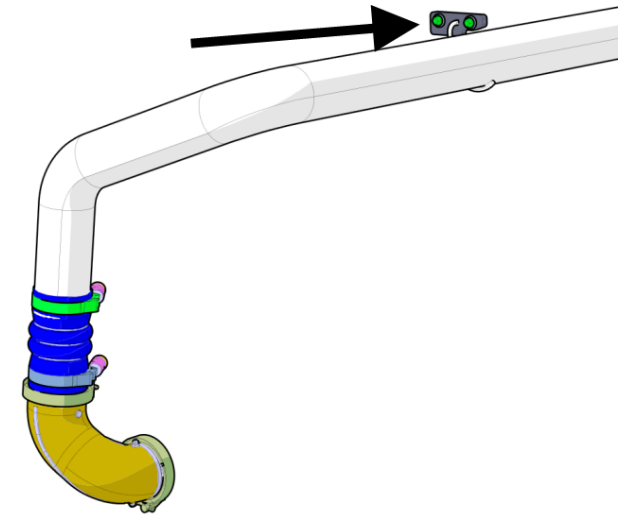

FIGURE 99: PIPE SUPPORT

84. Reinstall the intake elbow and adapter. Use the following hardware:

A: V-band clamp #20592783 (2x)

B: Gasket #1675066 (2x)

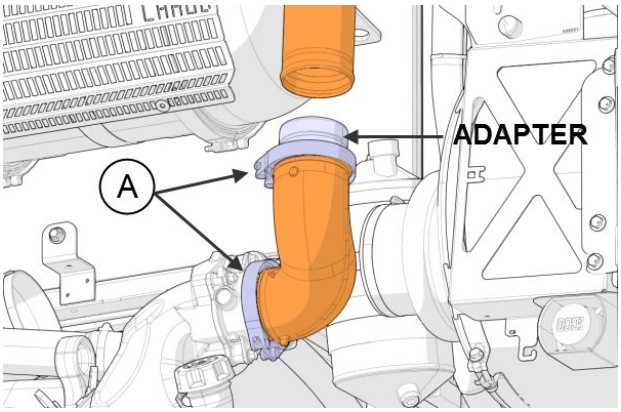

FIGURE 100: ENGINE INTAKE PIPE SUPPORT

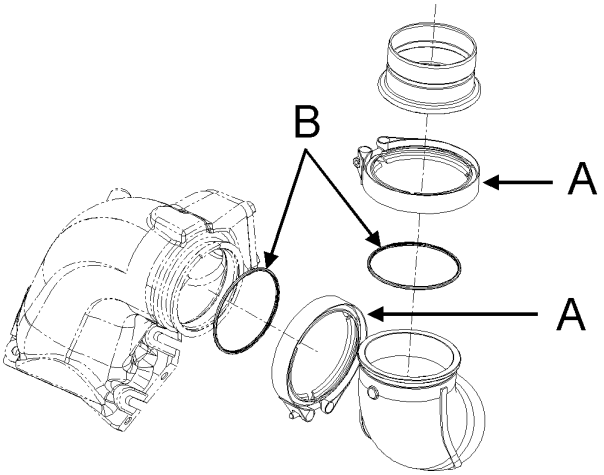

FIGURE 101

85. Connect the new CAC outlet pipe #050308 to the engine intake elbow.

A: #030096 hose (1x)

B: #21490630 spring loaded clamp (2X)

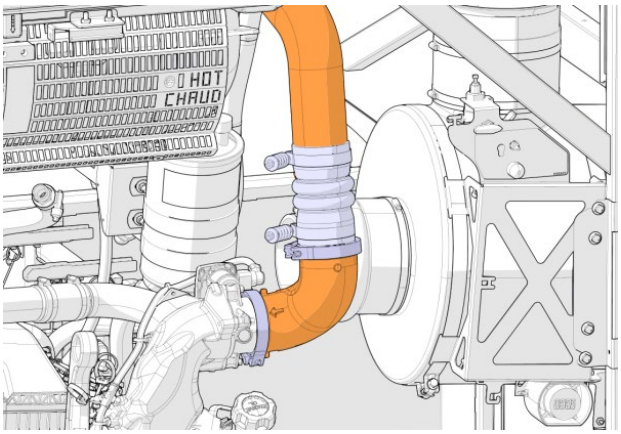

FIGURE 102

Constant Torque hose clamp 4.25" - charge air cooler (CAC) 4.5-5.5 lbf-ft

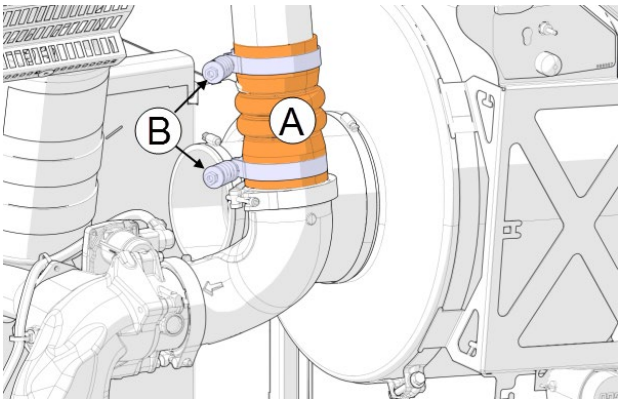

FIGURE 103: CONNECTION AT THE ENGINE INTAKE ELBOW

86. Reinstall the pipe (item A) section located downstream the engine air filter. Connect the air compressor fresh-air inlet pipe (item B) connected to pipe A.

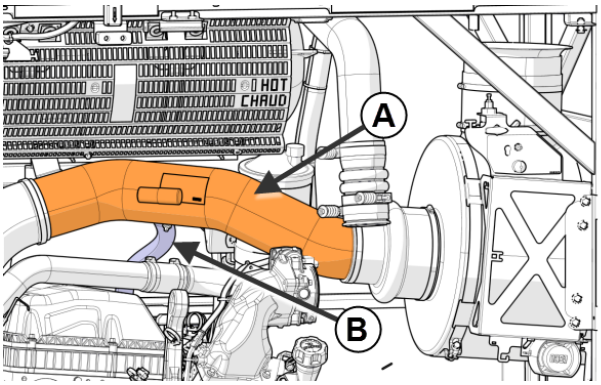

FIGURE 104

87. Reinstall the exhaust pipe section located between the DPF and the flexible section. Use the following hardware:
    - ***V-band clamp #21021850 (2x)***
    - ***Gasket #21095726 (2x)***

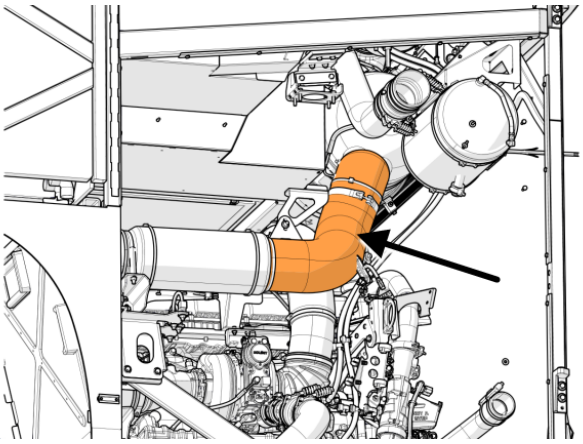

FIGURE 105: REINSTALL THIS EXHAUST PIPE SECTION

88. Pre-install the new radiator inlet pipe #050309.

A: #052889 silicone hose

B: # 992089 hose clamp (4x); final torque: 30 lbf-in

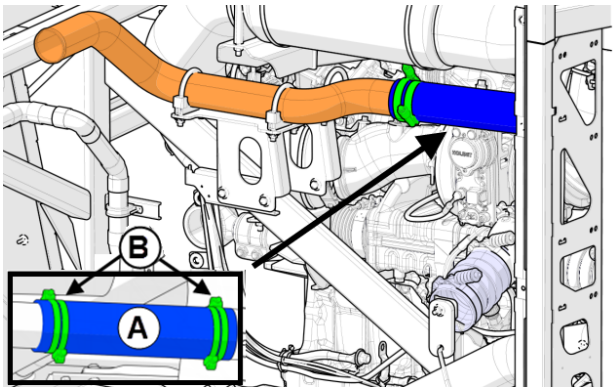

FIGURE 106

89. Install **seven (7) nylon tie mounts** centered on the beam, as shown in the picture. Drill Ø ¼". Use the following hardware:
    - ***Tie mount #509490 (7x)***
    - ***Rivet #504610 (7x)***

Spacing between each tie mount: around 6 ½"

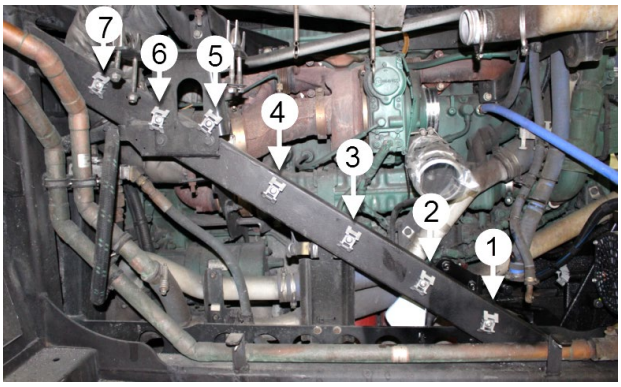

FIGURE 107

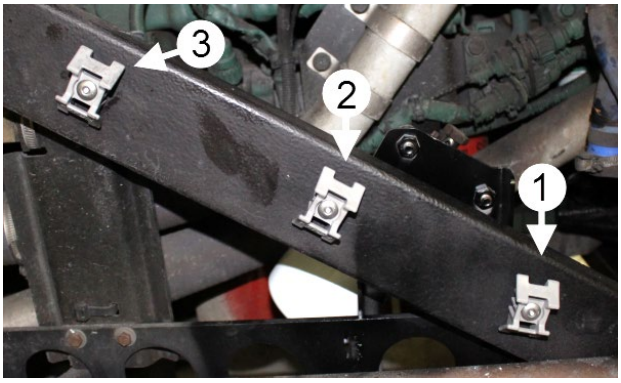

FIGURE 108

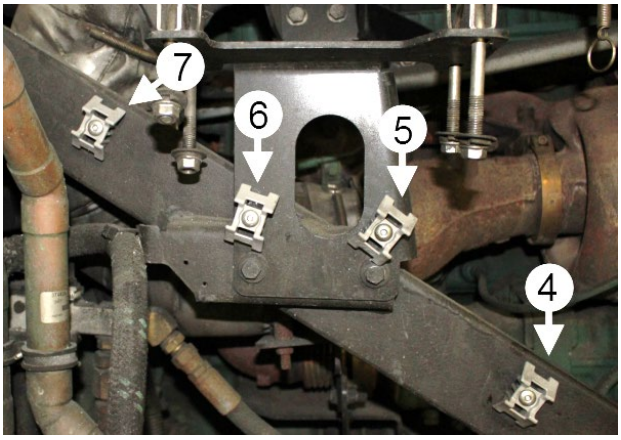

FIGURE 109

90. Install **five (5) nylon tie mounts** as shown in the picture. Drill Ø ¼″. Use the following hardware:
    - ***Tie mount #509490 (5x)***
    - ***Rivet #504610 (5x)***

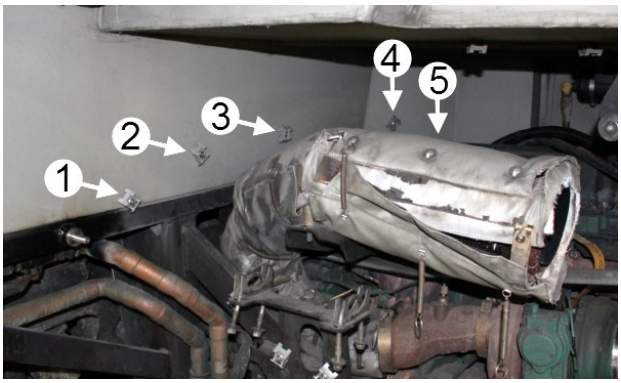

FIGURE 110

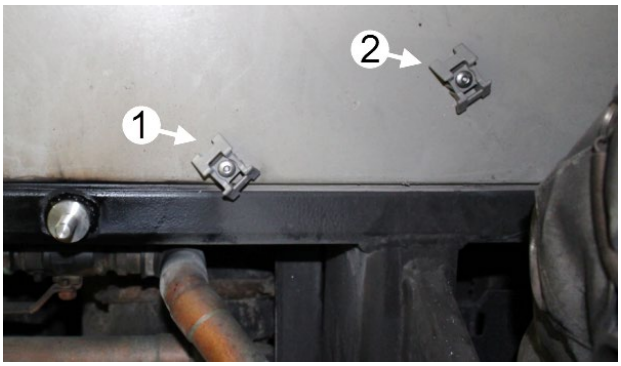

FIGURE 111

FIGURE 112: TIE MOUNT 3 & 4 SHALL NOT BE PLACED BETWEEN THE BULKHEAD AND THE VALVE COVER.

91. On the bracket shown on the image, drill a hole of Ø 11/32″ and then install a nylon tie with fir tree mount **#504750**.

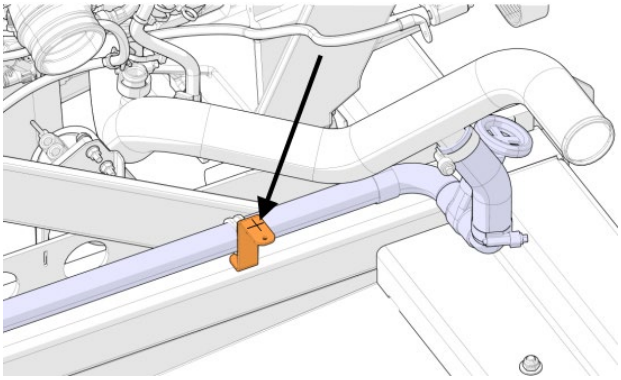

FIGURE 113: BRACKET ON THE ENGINE HOT SIDE

92. Hook up the “L.H. alternator power cable» #060682 to the alternator (+) terminal which is the stud adapter.

A: nut M8 #5001983 torque: 11 lbf-ft

B: flat washer #5001341

C: nylon tie #504016 (2x)

D: tie mount #504013 (2x)

E: rivet #504379 (2x)

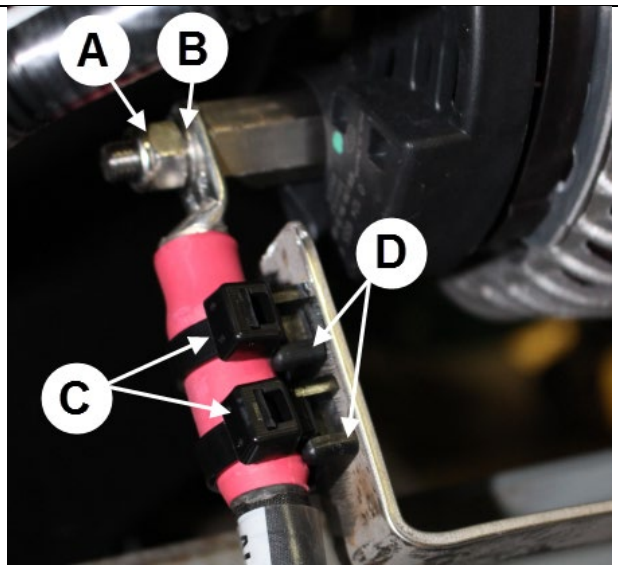

FIGURE 114

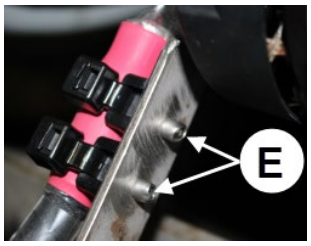

FIGURE 115

93. Secure the alternator power cable to the tie mounts previously installed using nylon ties:
    - ***nylon tie #509491 (7x)***

FIGURE 116

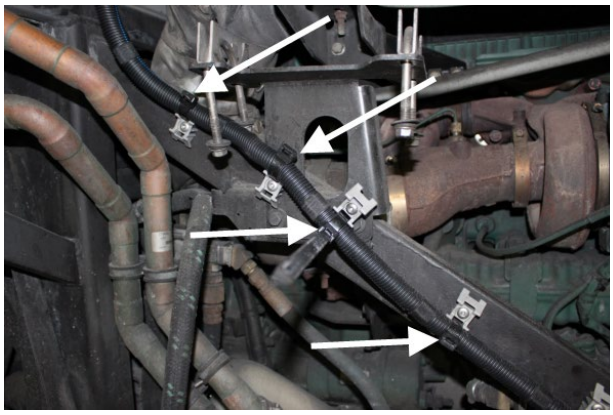

FIGURE 117

94. On the diagonal member located under the previously welded ground stud, install a nylon tie mount. Use:

    - ***Tie mount #509490 (1x)***
    - ***Rivet #504610 (1x)***

FIGURE 118

95. Partially install the “fan drive power cable” #0610563. Secure to the tie mount using a nylon tie. Keep the nylon tie loose.

DO NOT TIGHTEN THE NYLON TIES AT THIS MOMENT

A: nylon tie #509491 (1x)

B: fan drive power cable #0610563

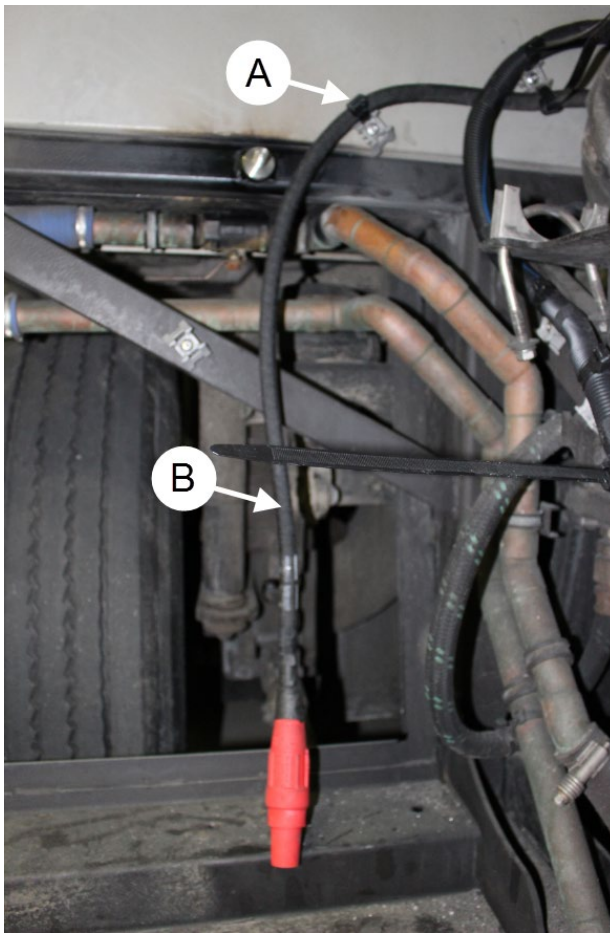

FIGURE 119

96. Install the “fan drive ground cable” #069246 and connect to the ground stud previously welded to the chassis.

DO NOT TIGHTEN THE NYLON TIES AT THIS MOMENT

A: fan drive ground cable #069246

B: fan drive power cable #0610563

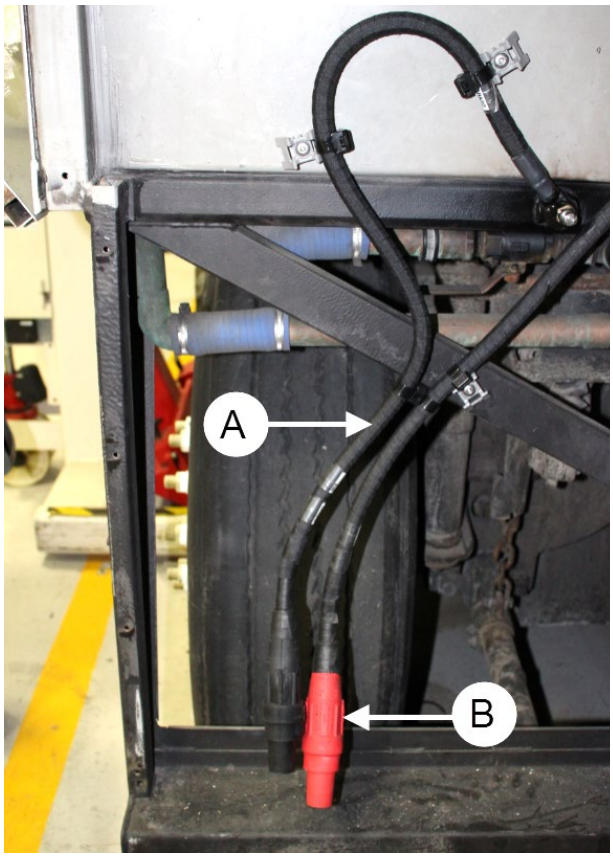

FIGURE 120

C: split lock washer #500482 + brass nut #500998

D: tie mount #509490 (1x) + rivet #504610 (1x) + nylon tie #509491 (1x)

DO NOT TIGHTEN THE NYLON TIES AT THIS MOMENT

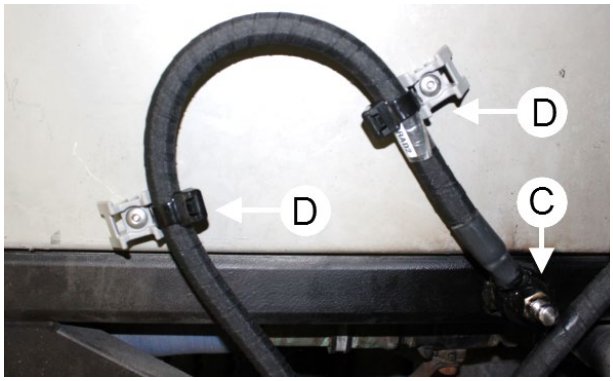

FIGURE 121

A: fan drive ground cable #069246

B: fan drive power cable #0610563

D: tie mount #509490 (1x) + rivet #504610 (1x) + nylon tie #509491 (1x)

E: « handcuff » nylon tie #N37749 (1x)

DO NOT TIGHTEN THE NYLON TIES AT THIS MOMENT

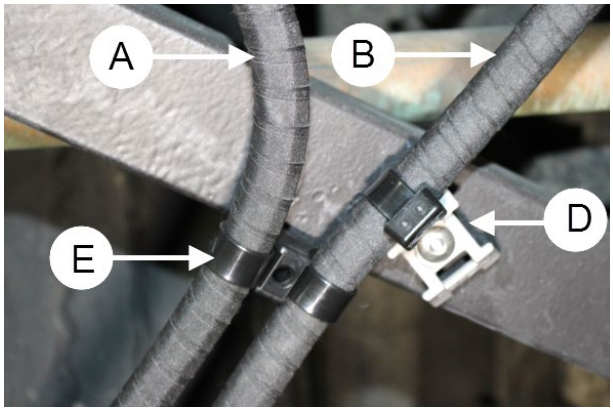

FIGURE 122

97. When stretched, the end of the ground cable and the fan drive power cable connector should be at approximately **1½″ to 2¼″ (38 mm to 57 mm)** from the lower flat surface.
98. Once properly adjusted, tighten the nylon ties previously installed.

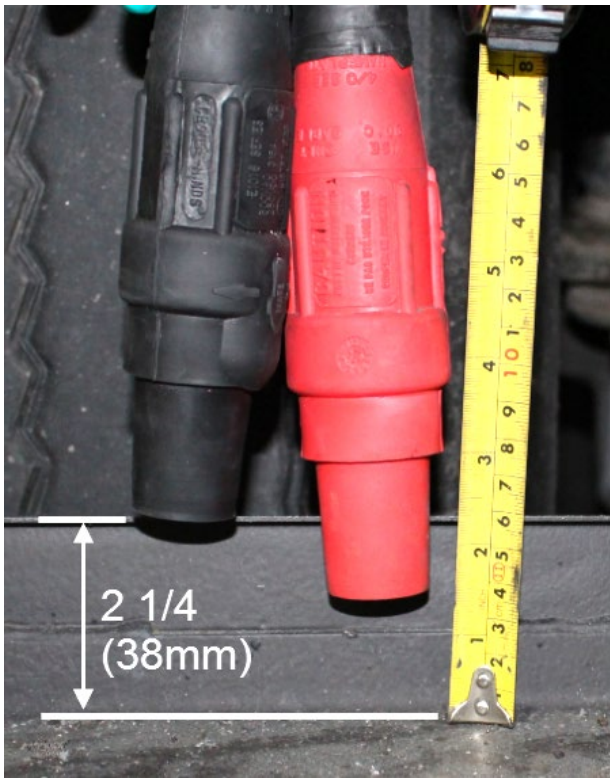

FIGURE 123

99. Apply Loctite Color Guard Rubber Coating on the ground stud connection.

FIGURE 124: GROUND STUD WITH RUBBER COATING

100. **INSTALLATION OF THE ALTERNATOR CONTROL CABLE #069511**

a) Connect the harness #069511 to the alternator.
b) Secure the harness with nylon ties as shown on the pictures.

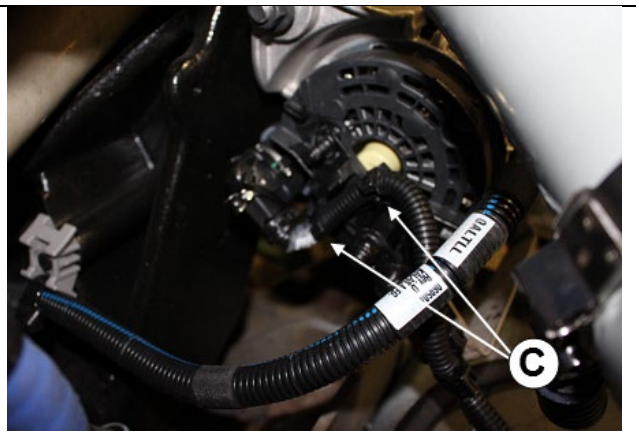

FIGURE 125: C: NYLON TIES #504016 (2x)

101. Partially route the “alternator control cable” #069511 along the “alternator power cable” as shown on the images. Secure the “alternator control cable” on the “alternator power cable” using nylon ties.

A: nylon tie #504016 (9x)

B: « handcuff » type nylon tie #N37749 as required

NOTE: The “alternator control cable” #069511 will be connected to the “fan to RJB interface” harness #23488790. For this reason, do not route the “alternator control cable” further than what is shown on the images.

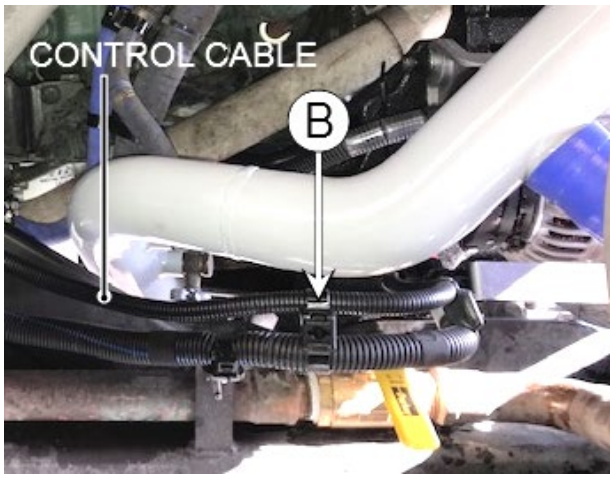

FIGURE 126

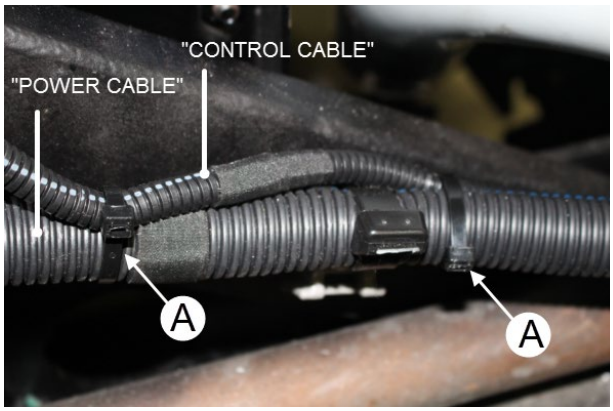

FIGURE 127

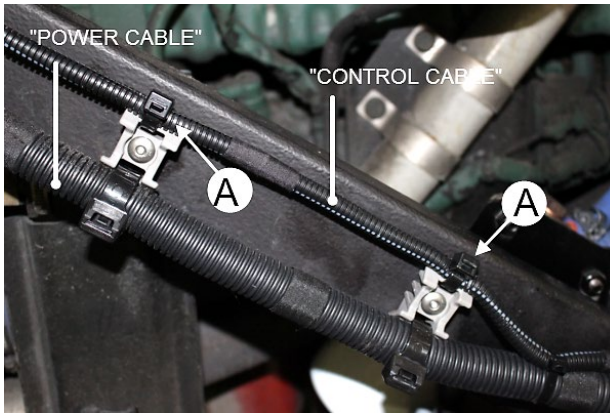

FIGURE 128

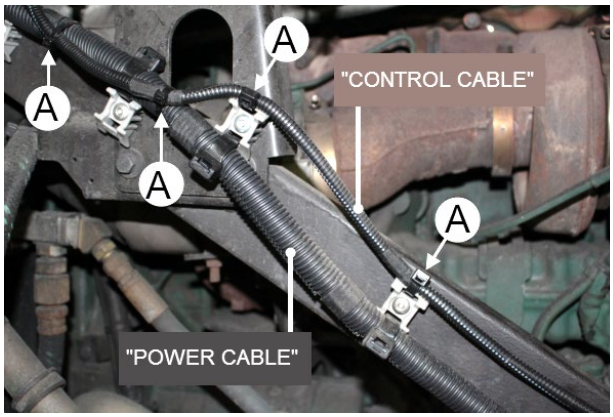

FIGURE 129

FIGURE 130

102. Route the "***fan drive power cable***" and the "***alternator power cable***" up to the electrical compartment.

DO NOT PASS THE CABLES through the upper cable boot AT THIS MOMENT. Refer to the pictures at right as a guide for the installation.

Secure both cables with the four (4) tie mounts previously installed. Secure the cables on the tie mounts as previously done with nylon ties.

A: nylon tie #509491 (8x)

DO NOT TIGHTEN THE NYLON TIES AT THIS MOMENT

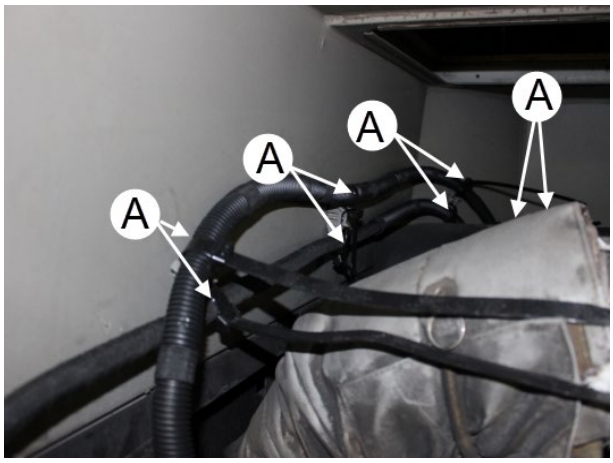

FIGURE 131

103. Route the “fan to RJB interface harness” #23488790 up to the electrical compartment, passing through the upper cable boot. But first, place connector A34-J1 next to the red connector of the fan drive power cable (see image at right).

A: fan to RJB interface harness #23488790

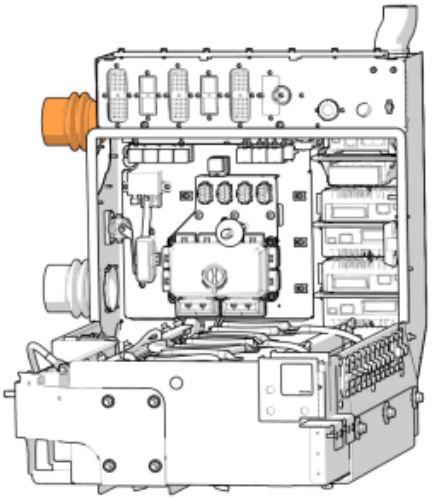

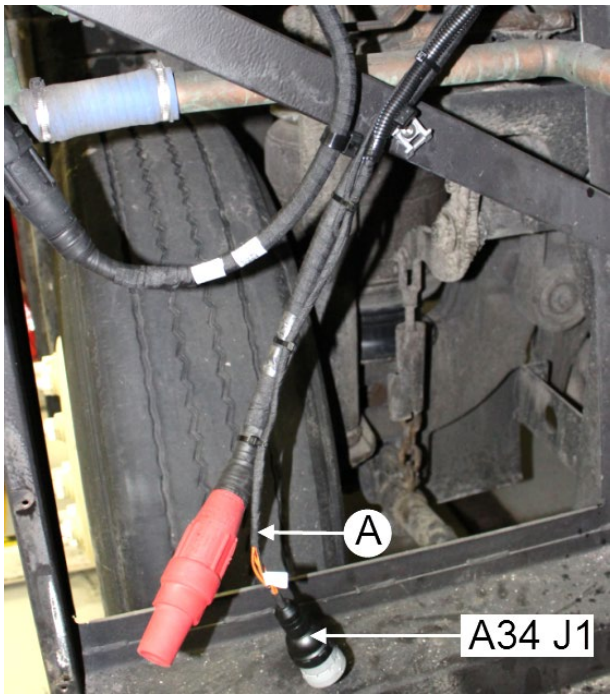

FIGURE 132

104. Secure harness #23488790 along the fan drive power cable, placing a nylon tie #504016 every 6 inches (150 mm).

DO NOT TIGHTEN THE NYLON TIES AT THIS MOMENT

FIGURE 133

105. Secure connector C-ALT3 as shown on the image with one (1) nylon tie #504016 and then connect to the alternator control cable #069511 previously installed.

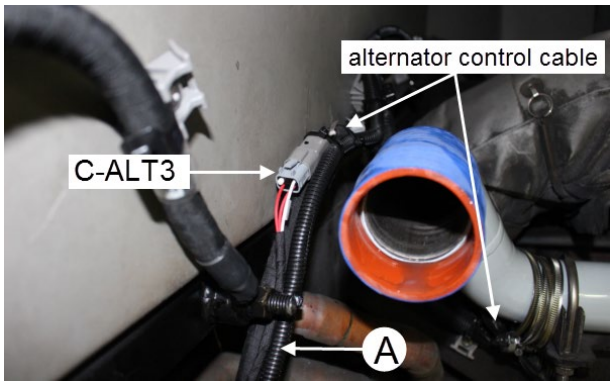

FIGURE 134

106. Apply Color Guard rubber coating at the alternator ground (⏚) and positive (+) connections.

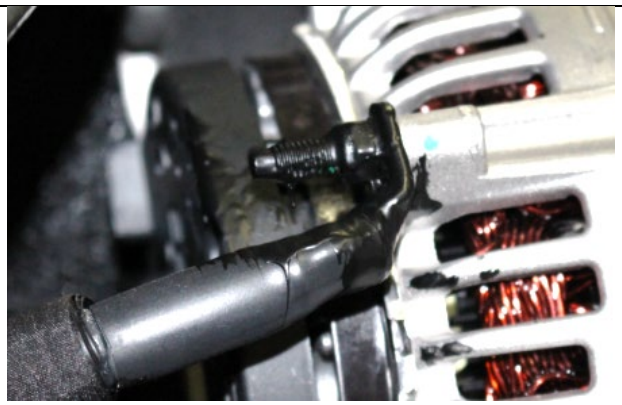

FIGURE 135: GROUND CONNECTION ON THE ALTERNATOR

FIGURE 136: POSITIVE (+) CONNECTION ON THE ALTERNATOR

107. Pre-install the new **CAC inlet pipe** #050328. Use one new #030096 CAC **flexible hose**. Secure the hose using two (2) spring-loaded clamps #21490630.

- ***#030096 hose (1x)***
- ***#21490630 spring loaded clamp (2X), final torque: 5 lbf-ft***

NOTE: <u>On vehicles prior serial G-5932 (2016)</u>, remove the 90° elbow diffuser pipe and replace with straight turbo diffuser pipe #053662. Use the following parts:

A: straight turbo diffuser pipe #053662 (1x)

B: gasket #21096684 (1x)

C: V-band clamp #20592787 (1x)

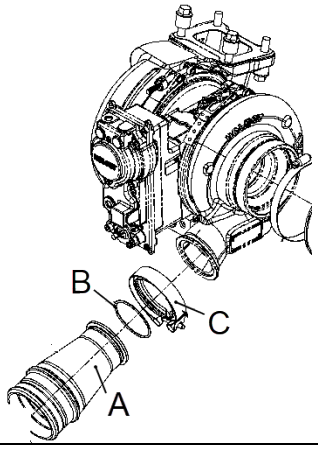

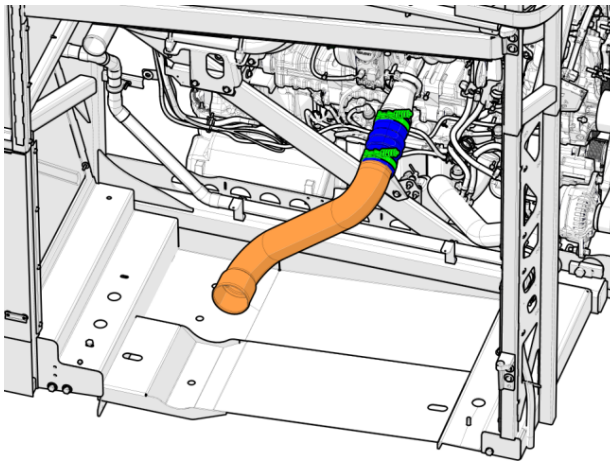

FIGURE 137: CONNECTION AT THE TURBO OUTLET ELBOW

108. Preinstall all the flexible hoses at the cooling pack connections. Use the following parts:

A: flexible hose #531469 (1x)

B: flexible hose #531471 (1x)

C: silicone hose #053617 (2x)

D: clamp #21490616 (8x)

E: caillau clamp #992089 (8x)

For proper clamp torque, refer to HOSE CLAMP TORQUE on page 14

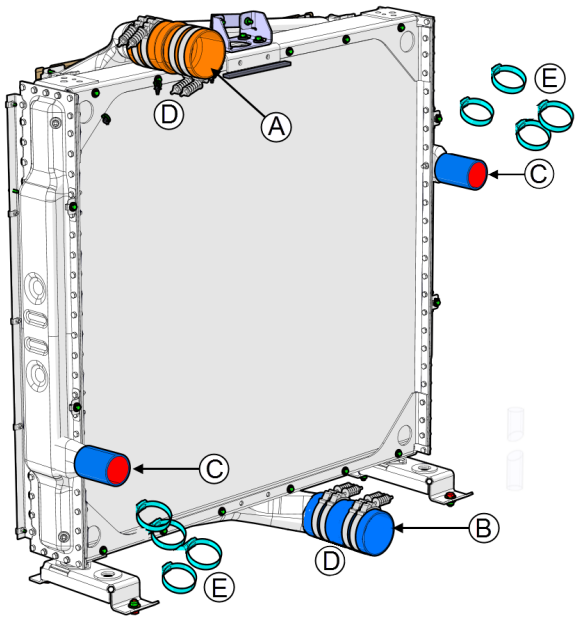

FIGURE 138

109. Prepare the **cooling pack upper attachment** with the three (3) rectangular plates (see image) recovered from the former installation and the following parts:

A: anti-vibration mount #21185073

B: upper radiator support #050351

C: 2x screw #5001738 , 2x nut #502837

D: 2x screw #5001738 , 2x washer #500942

E: 2x screw #5001745 , 2x washer #500942

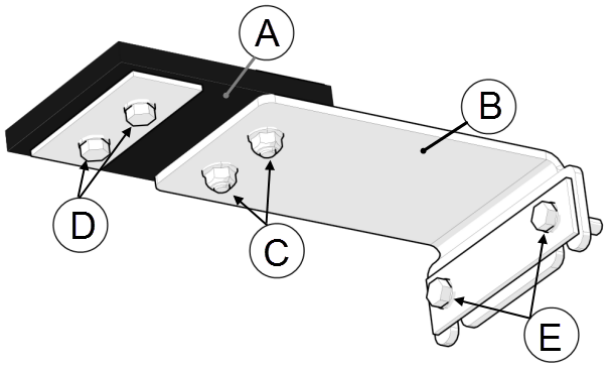

FIGURE 139:

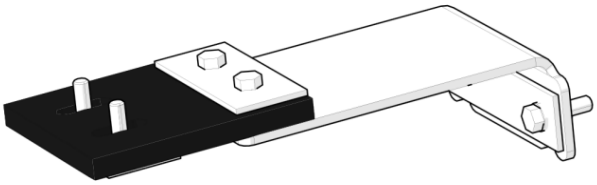

FIGURE 140

110. Install the upper attachment on the cooling pack.

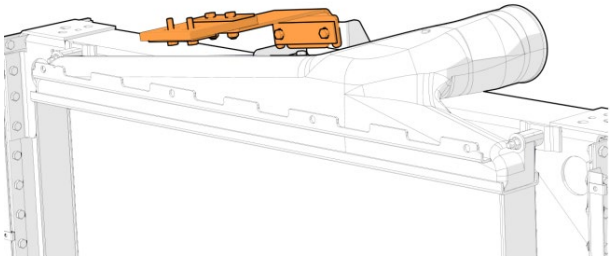

FIGURE 141

111. Reinstall the cooling pack in its compartment.

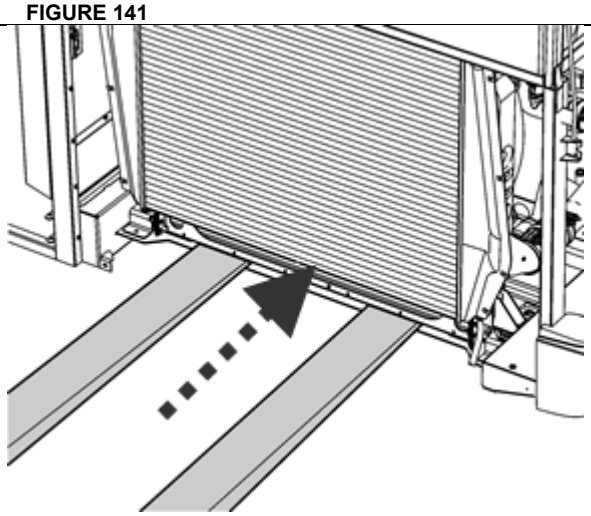

FIGURE 142

112. Secure the cooling pack base with the following parts:

A: 4x screw #502804

B: 8x washer #5001751

C: 4x nut #502859

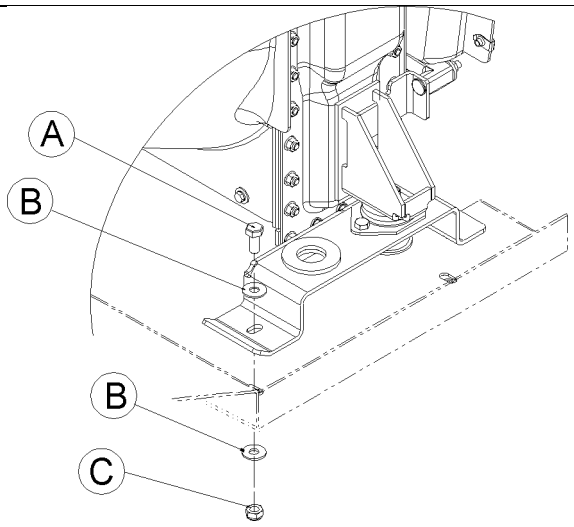

FIGURE 143

113. Bolt the anti-vibration mount onto the vehicle chassis

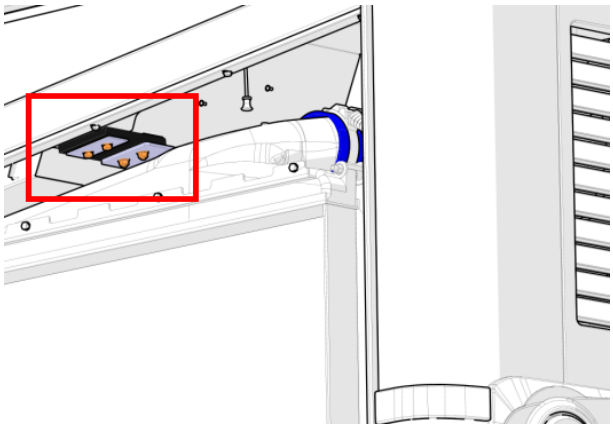

FIGURE 144

114. Complete the connection with the cooling pack.

For proper clamp torque, refer to HOSE CLAMP TORQUE on page 14

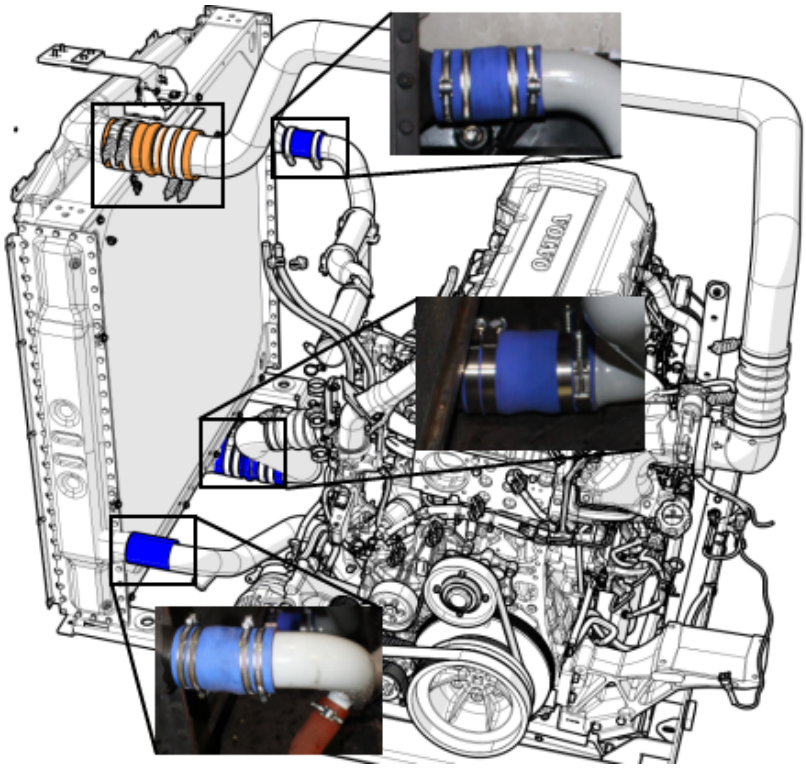

FIGURE 145

115. Connect the **radiator vent hose** on top of the radiator.

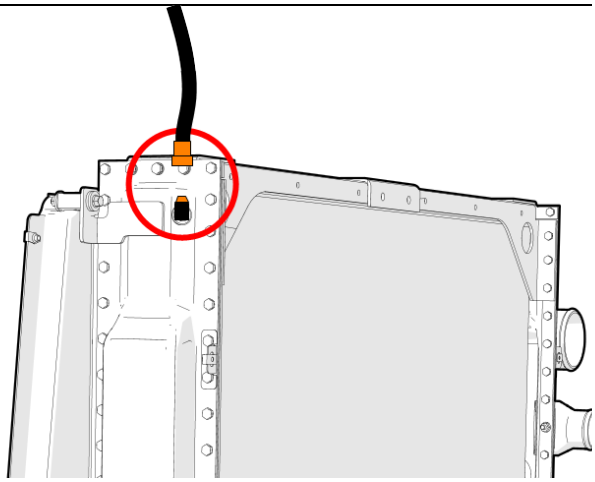

116. Reinstall the cooling pack protector tube with the following hardware:

A: Screw #502804 (3x)

B: split lock washer #5001737 (3x)

C: flat washer #5001751 (2)

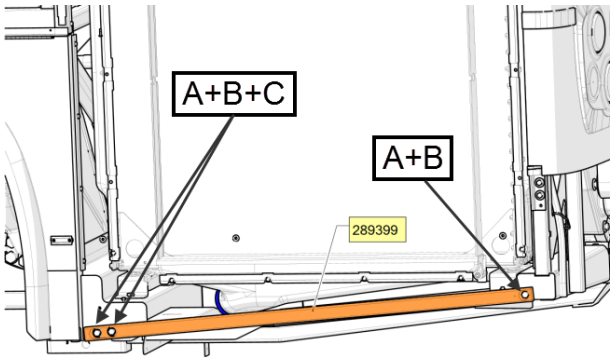

FIGURE 146

117. Remove all the old spring nuts on the cooling pack and replace with new spring nuts.

- ***spring nut #5001965 (18x)***

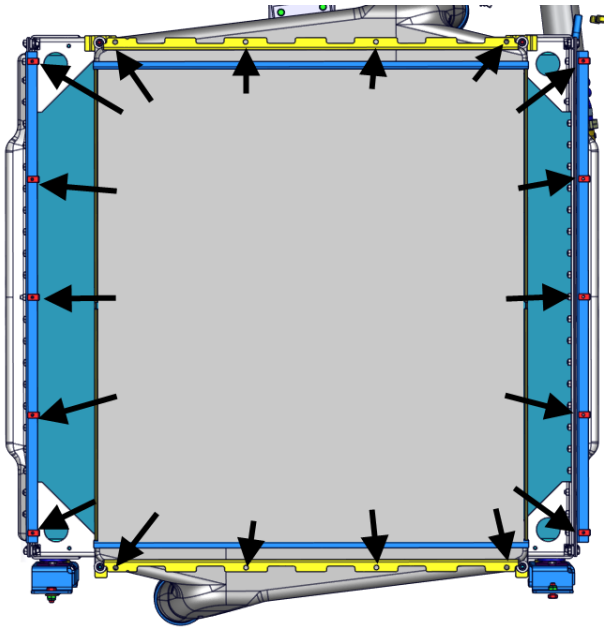

FIGURE 147

118. Install the sealing element #**050355**. Secure with the following hardware:

4x bolt #5001697

4x lock washer #502570

Use foam tape #506040 to fill the gap between the sealing element and the charge air cooler if necessary.

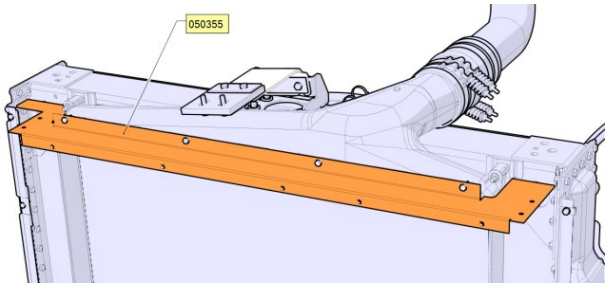

FIGURE 148

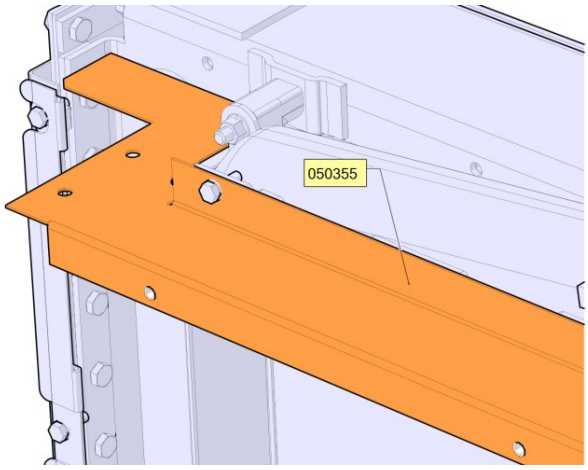

FIGURE 149

119. Install the sealing element #**050362**. Screw it on the existing threaded holes on the bottom of the radiator. Secure with the following hardware:

4x bolt #5001697

4x lock washer #502570

Use foam tape #506040 to fill the gap between the sealing element and the charge air cooler if necessary.

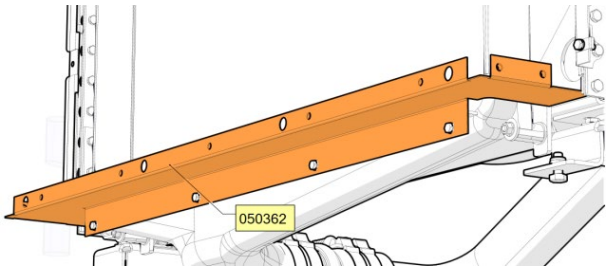

FIGURE 150

120. Install the sealing element #***050360.*** Screw them onto the upper and lower sealing elements installed at the previous steps. Secure with the following hardware:

9x bolt #5001697

9x lock washer #502570

A: #050360

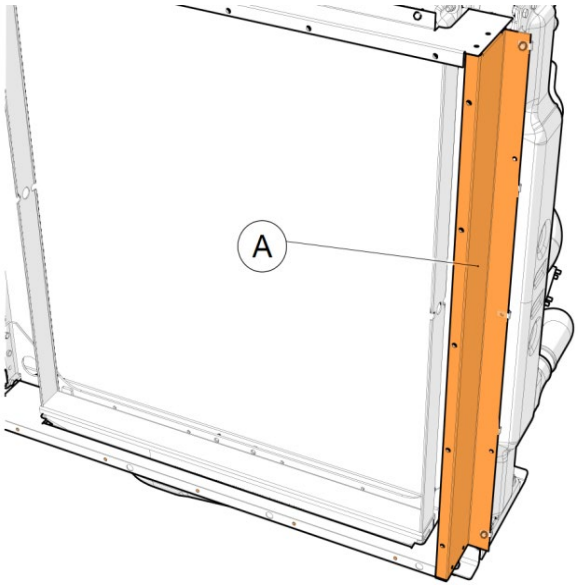

FIGURE 151

121. Install the sealing element #***050380.*** Secure with the following hardware:

5x bolt #5001697

5x lock washer #502570

B: #050380

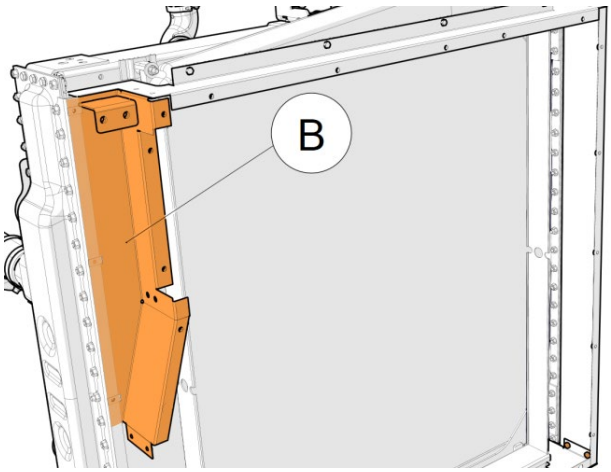

FIGURE 152

122. Install the sealing element ***#050359.*** Secure with the following hardware:

6x bolt #5001697

6x lock washer #502570

C: #050359

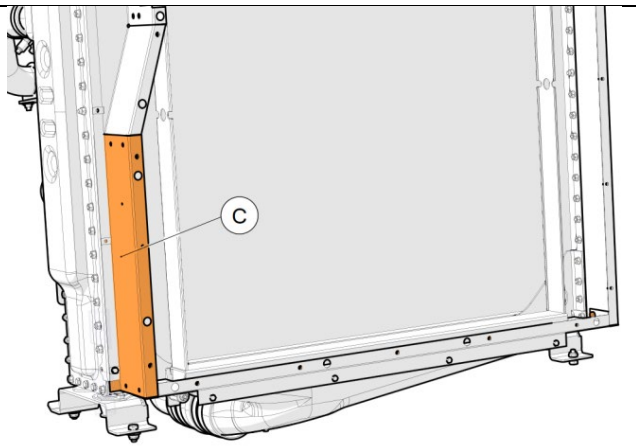

FIGURE 153

123. Cut two pieces of 39 $^{3}/_{8}$ inches (1000 mm) long of **rubber extrusion #506025**.

124. Using good industrial glue (Loctite 404 or similar product), glue the two pieces of rubber extrusion centered on the reinforcement angles of fan support panel **#050343**.

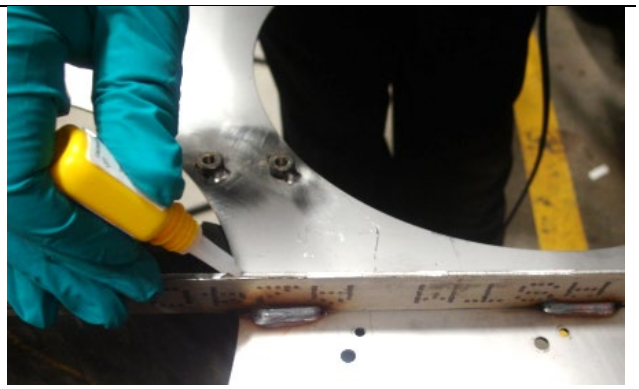

FIGURE 154

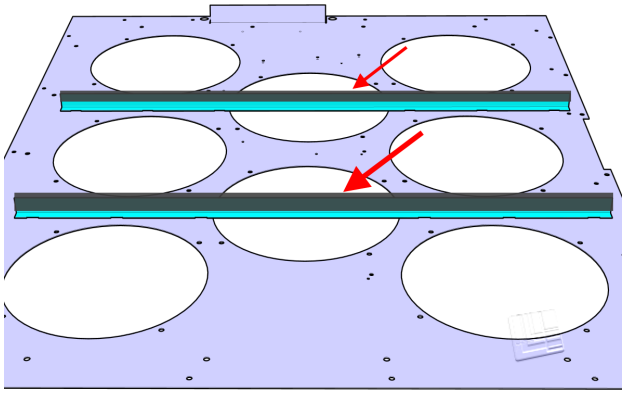

FIGURE 155

125. Install panel **#050343**. Secure with the following hardware:

22 x bolt #5001697

22 x lock washer #502570

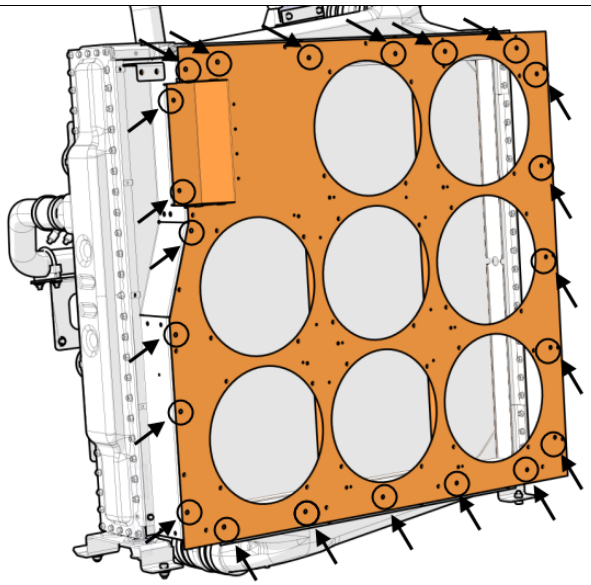

FIGURE 156

126. Install the circuit breaker box #564612.

Install with the following hardware:

4x bolt #500119

4x lock washer #5001868

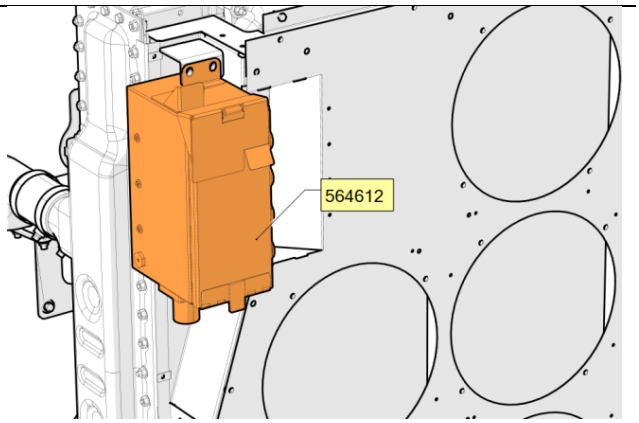

FIGURE 157

127. Install the upper sealing element #050366.

Secure with the following hardware:

5x bolt #5001697

5x lock washer #502570

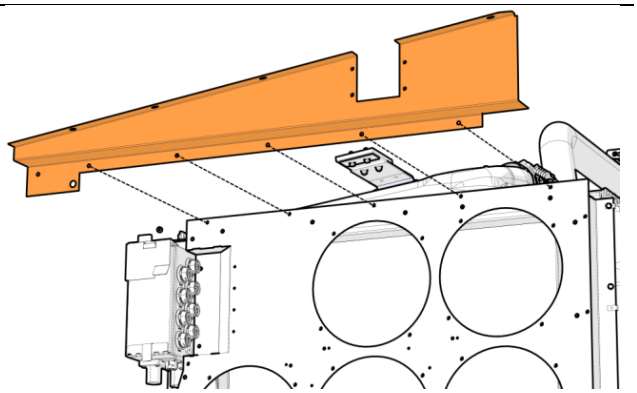

FIGURE 158

128. Install the pull-rod box #050369.

Secure with the following hardware:

4x bolt #5001697

4x lock washer #502570

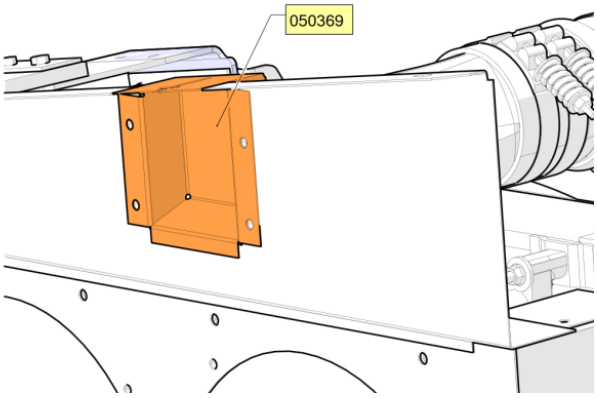

FIGURE 159

129. Install the lower sealing element #050365.

Secure with the following hardware:

4x bolt #5001697

4x lock washer #502570

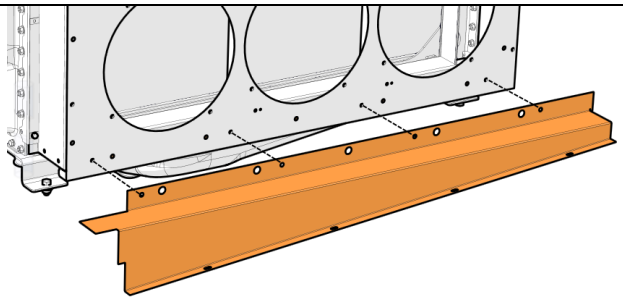

FIGURE 160

130. Install the R.H. side sealing element #**050367**.

Secure with the following hardware:

bolts #5001697 (5x)

lock washers #502570 (5x)

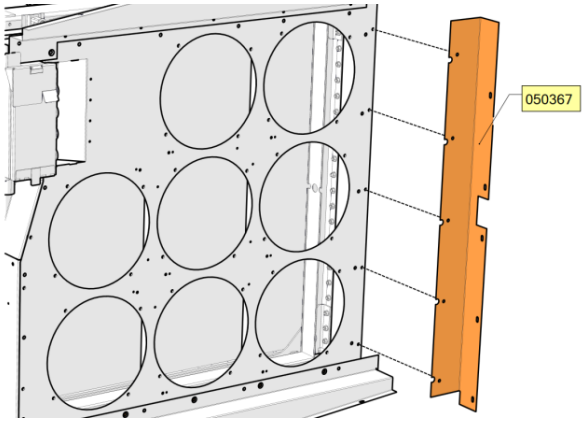

FIGURE 161

131. Install the **fans** and **<u>fan hand guards</u>** on the panel. Snap the fan blue connector in the holes punched on the panel for that matter.

FAN HAND GUARD

Install with the following hardware:

32x bolts #502686

32x lock washers #5001833

Prescribed torque:40 lbf-in

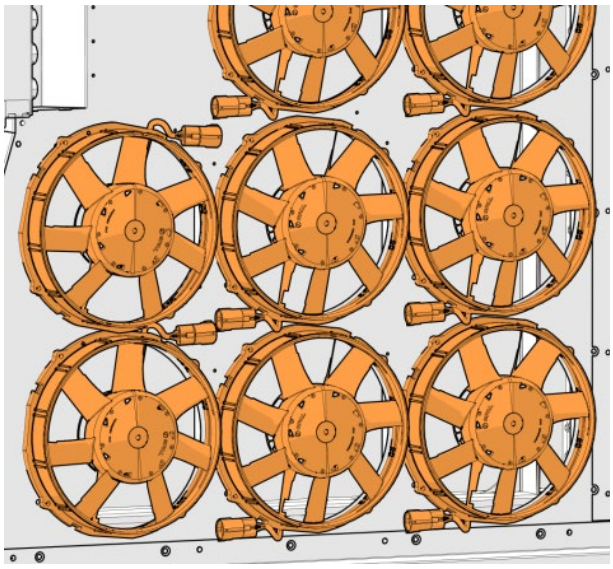

FIGURE 162

132. Get the fan drive harnesses kit #068820. **Take note that each harness is specifically identified with a number corresponding to an appropriate fan location**.

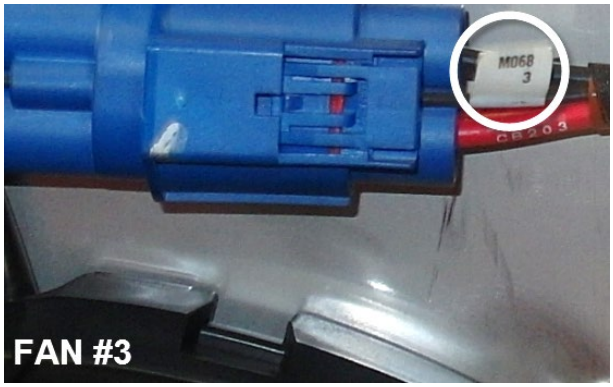

FIGURE 163

133. Route and secure the fan harnesses as shown on the images.

Secure with the following parts:

A= nylon tie mount #504013 + rivet #504379 + nylon tie #504016

(11x)

B= nylon tie #504016 (4x)

Do not tighten the nylon ties at this moment

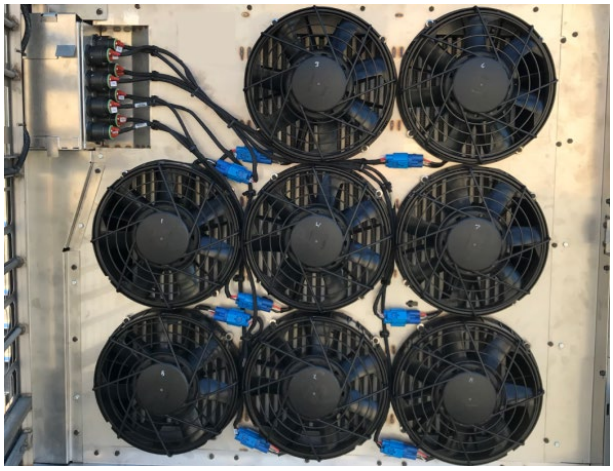

FIGURE 164

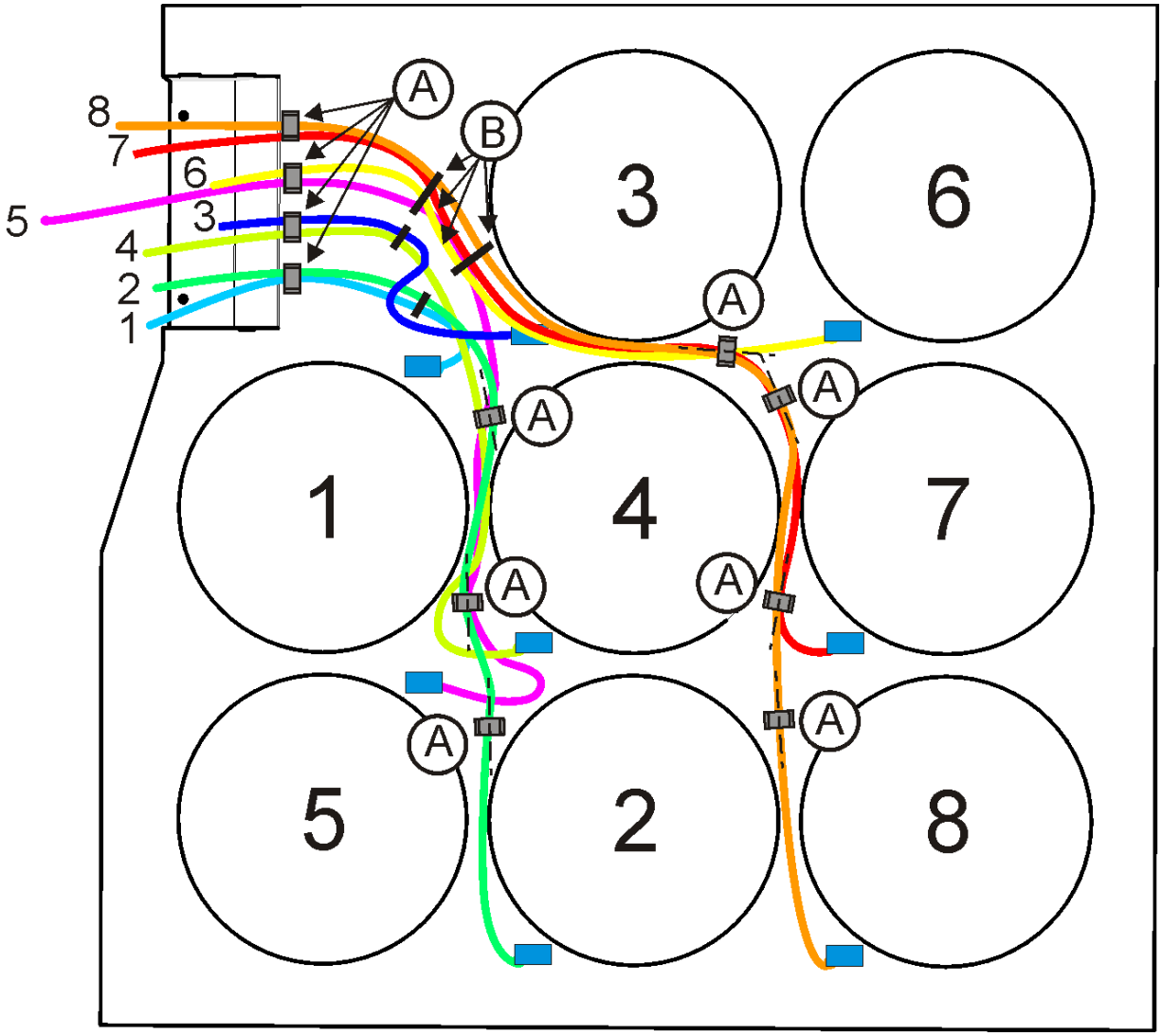

FIGURE 165

134. Connect each fan to the corresponding connection port on the circuit breaker box.

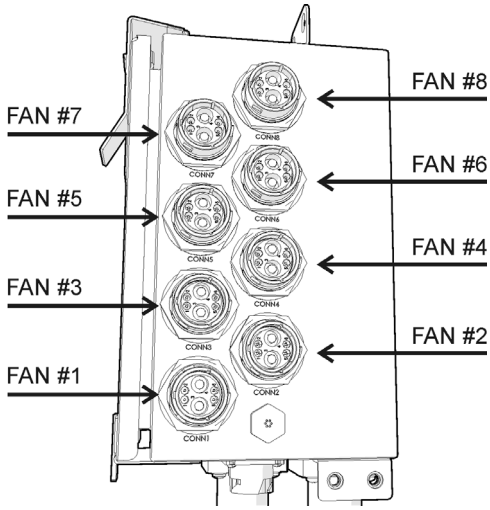

FIGURE 166

135. Using the blue hose previously saved, make a protective sheath. Cut to an appropriate size and secure around the cables using nylon ties.

FIGURE 167

136. Complete the connection to the fan circuit breaker box (three connectors: gray, black and red).

A: fan drive ground cable (black connector)

B: fan drive power cable (red connector)

C: "fan to RJB interface" harness (gray connector)

Secure the cables appropriately using nylon ties and/or « handcuff » type nylon tie #N37749 as required

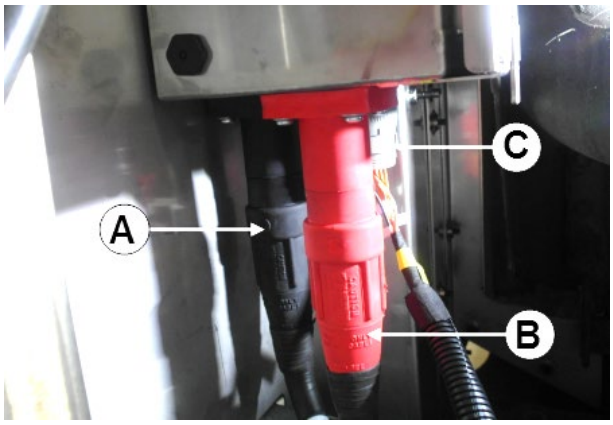

FIGURE 168

On the engine hot side, remove the radiator inlet pipe

FIGURE 169

137. Install the sealing element #**050415**.
Secure with the following hardware:

- ***bolts #5001697 (1x)***
- ***lock washers #502570 (1x)***

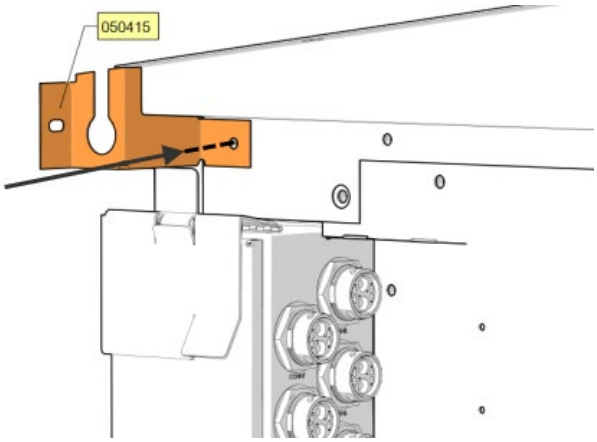

FIGURE 170

138. Install the sealing element #**050364**.
Secure with the following hardware:

- ***screw #502848 (1x)***

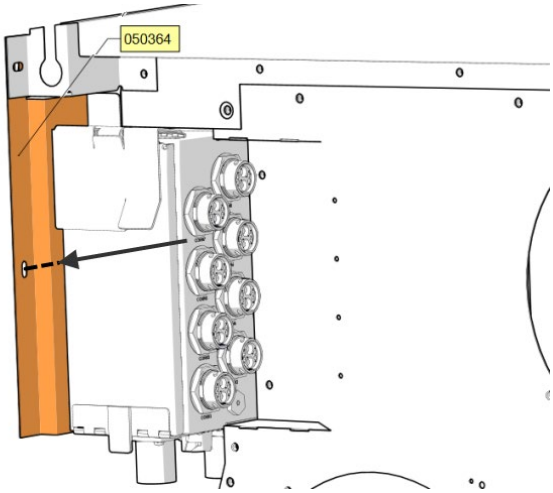

FIGURE 171

139. Install the sealing element #050363.
Secure with the following hardware:

- ***bolts #5001697 (4x)***
- ***lock washers #502570 (4x)***

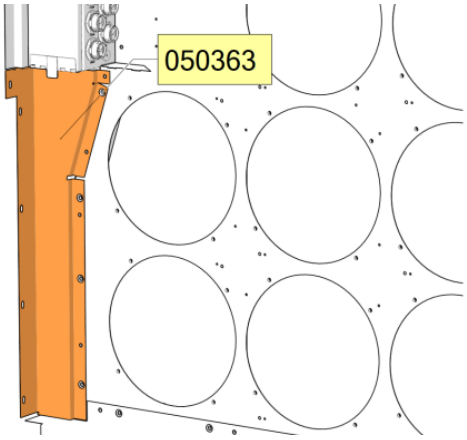

FIGURE 172

140. Complete the installation of the sealing elements. Screw the panels to the chassis threaded holes where shown on the image.

Use the following hardware:

- ***screw #502848 (19x)***

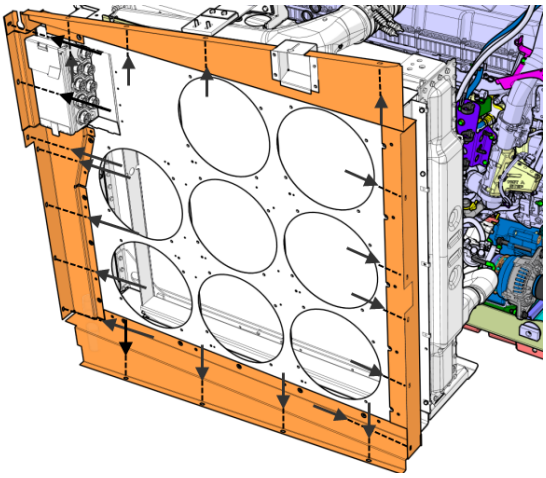

FIGURE 173

INSTALLATION OF ELECTRIC COMPONENTS AND HARNESS CONNECTIONS IN THE MAIN POWER COMPARTMENT

DIAGRAM OF ELECTRICAL CONNECTIONS

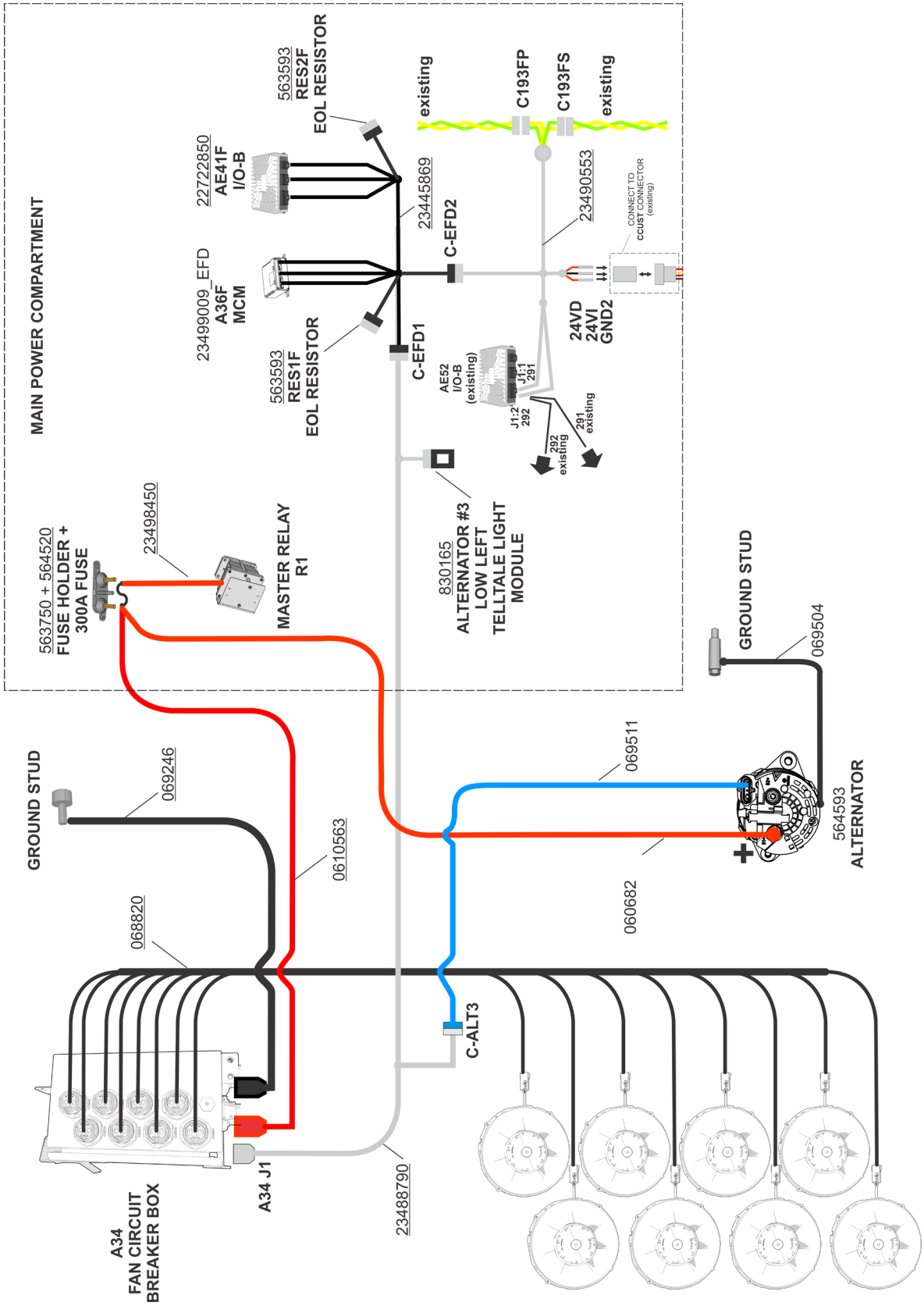

141. In the battery compartment, disconnect the battery ground cable from the chassis ground stud.

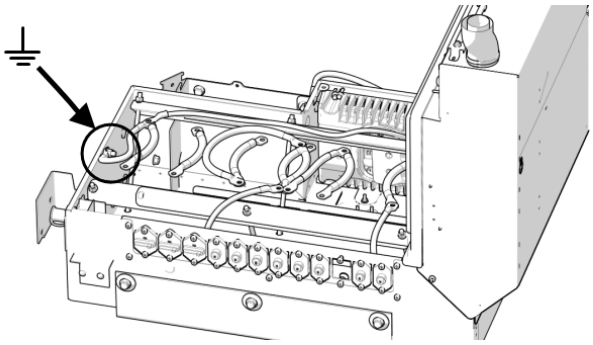

FIGURE 174

142. Make sure there is no voltage applied to the master relay R1 posts and then, remove the master relay R1 cover <u>if applicable</u>.

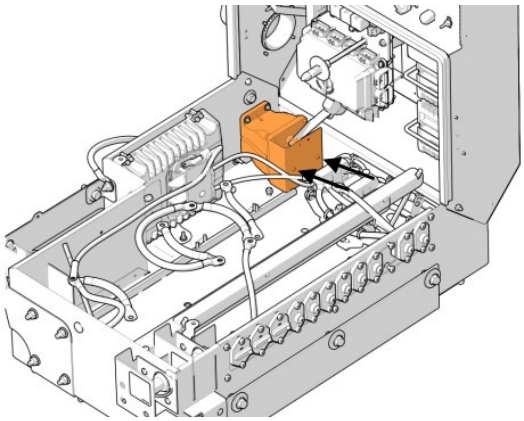

FIGURE 175

143. Complete the routing of the "***fan drive power cable***" and the "***alternator power cable***" inside the electrical compartment through the upper cable boot.

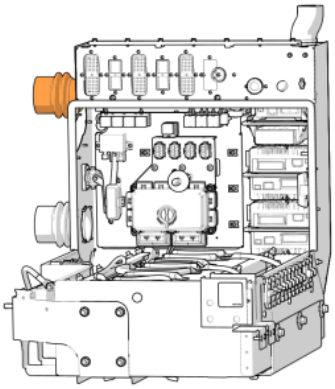

FIGURE 176

144. Install the **fuse holder #563750** at the location shown on the image. To do so, drill two 11/64 pilot holes for the installation of the fuse holder. Secure with the following hardware:

A: tapping screw #500658 + flat washer #5001341

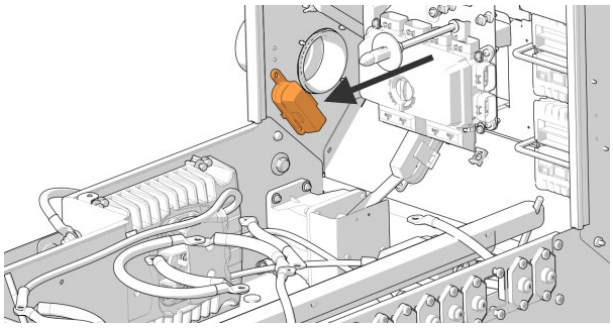

FIGURE 177

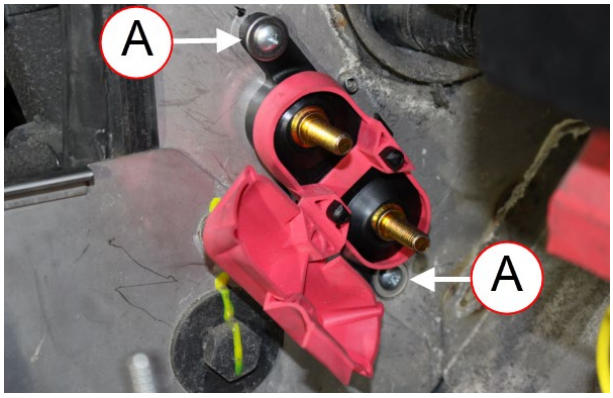

FIGURE 178

145. Prepare to the installation of the MCM module #23499009_EFD.

First, use the MCM as a template to mark the drilling position. Drill three holes of Ø1/4″.

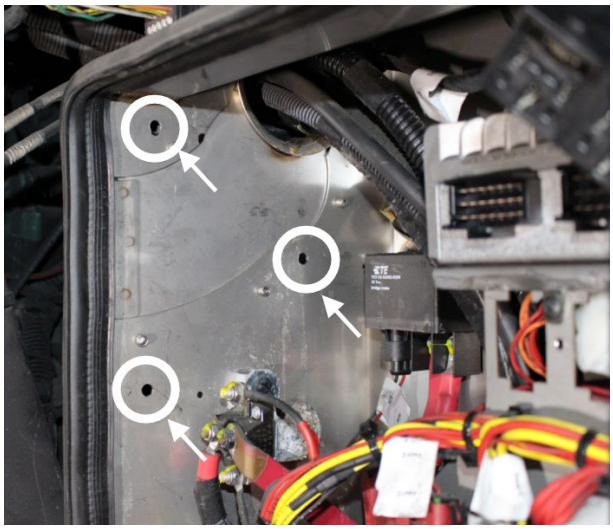

FIGURE 179

146. Prepare the mounting screws as shown on the image using the following hardware.

A: Screw #502888 (3x)

B: Flat washer #502709 (9x)

C: Nut #502854 (3x)

Note: At each of the three mounting points, there is a flat washer on the other side of the bulkhead.

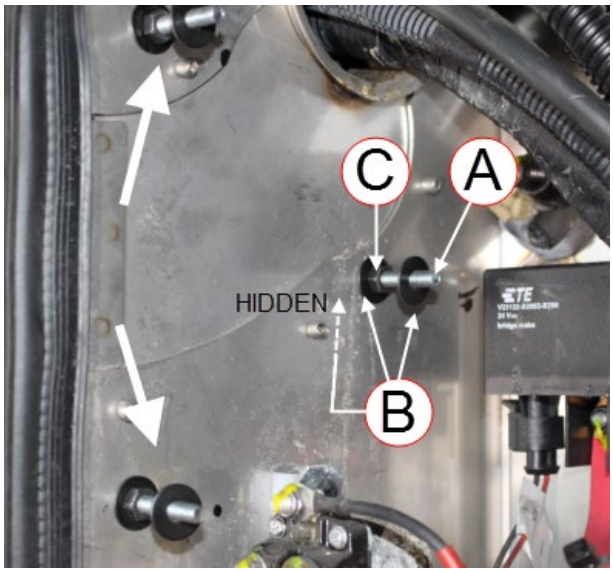

FIGURE 180

147. Install the MCM module 23499009_EFD.

D: Flanged nut #5001932 (3x)

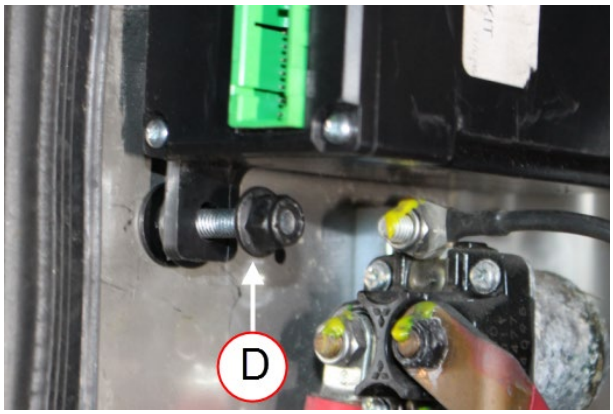

FIGURE 181

148. Cut one pieces of 4 inches (100 mm) long of **rubber extrusion #506025**.

149. Using good industrial glue (Loctite 404 or similar product), glue the piece of rubber extrusion on the I/O module support **#**053043 as shown on the image.

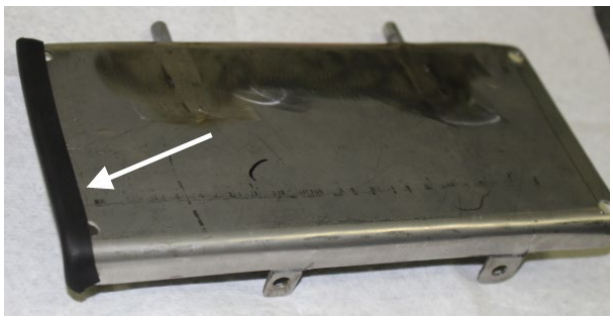

FIGURE 182

150. Use the I/O module support #053043 as a template to mark the drilling position. Drill four (4) holes as shown on the image.

Diameters:

2 holes for the rods: $^{13}/_{64}$"

2 holes for the screws: $^{1}/_{8}$"

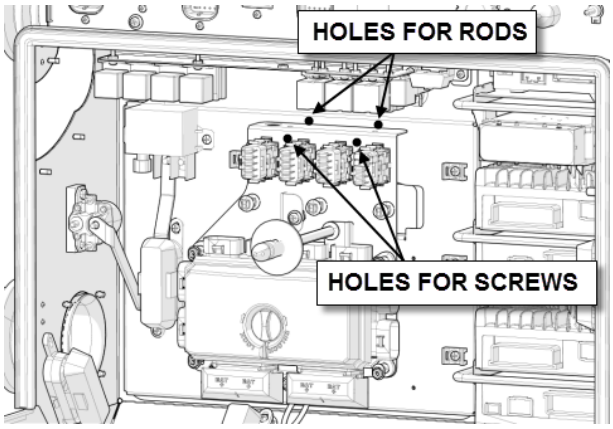

FIGURE 183

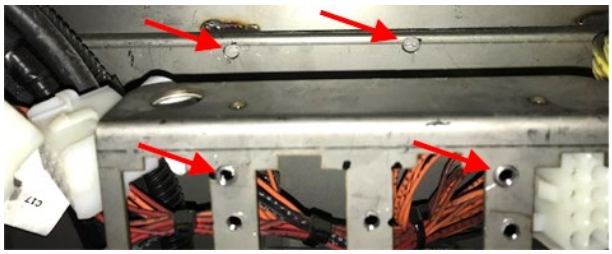

FIGURE 184

151. Install the U-shaped telltale light module bracket #381594 at an appropriate place in the electrical compartment where it can be reached by the **"fan to RJB interface"** harness #23488790. Fasten using **two (2) rivets #504379.**

152. Fix the I/O module on the support **#**053043. Secure the module using the following hardware:

- ***screw 10-24x 5/8 #5001447 (4x)***
- ***nut with nylon insert #5001180 (4x)***

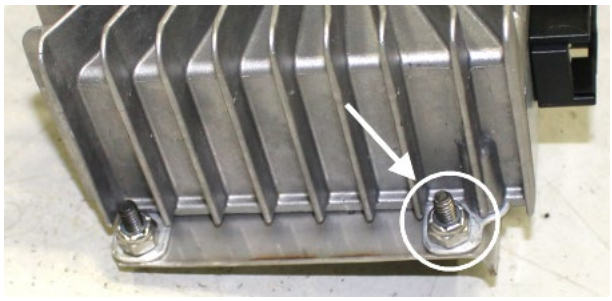

FIGURE 185

153. Install the I/O module. Secure with the following hardware:

A: screw #500623 (2x)

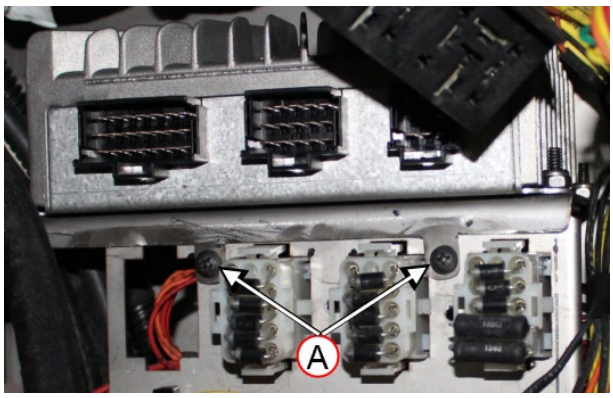

FIGURE 186

154. Place the **300A fuse #564520** (item A) in the fuse holder previously installed.

155. Connect to the lowest post of the fuse holder the two (2) following cables that are routed from the alternator and the fan drive circuit breakers box:

- ***Alternator power cable (item B)***
- ***Fan drive power cable (item C)***

- ***item D: flat washer #5001341 (1x) & nut #5001983 (1x)***

156. Thread the nuts and tighten to a torque of 96 lbf-in (11 Nm)

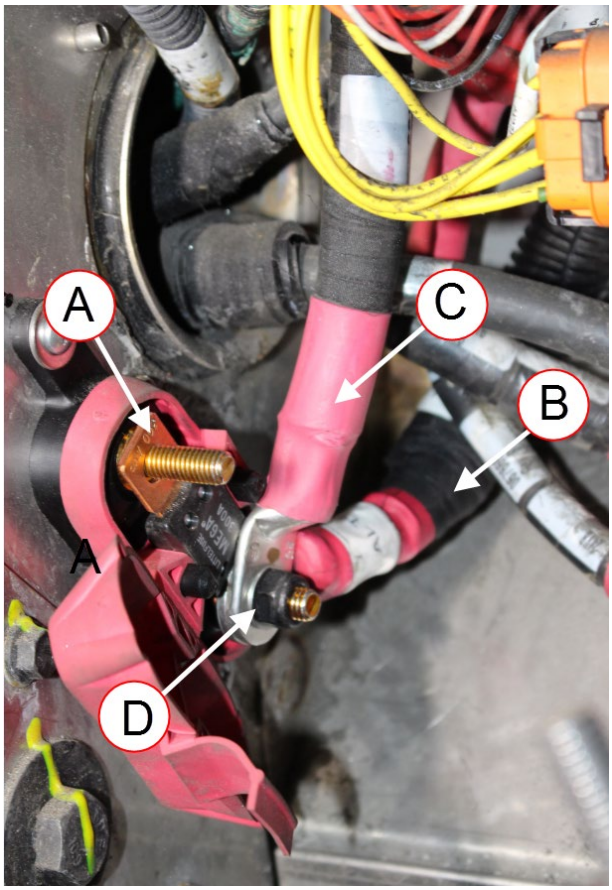

FIGURE 187

157. Connect the elbow lug of the “master relay R1 to 300A fuse” **cable #23498450** to the R1 stud identified on the image and the upper stud on the fuse holder.

item A: flat washer #5001341 (1x) & nut #5001983 (1x)

Master relay R1- Port 30 – M10-1.5 stud nut torque: 160-195 lb-in (18-22 Nm)

Fuse holder: tighten to a torque of 96 lbf-in (11 Nm)

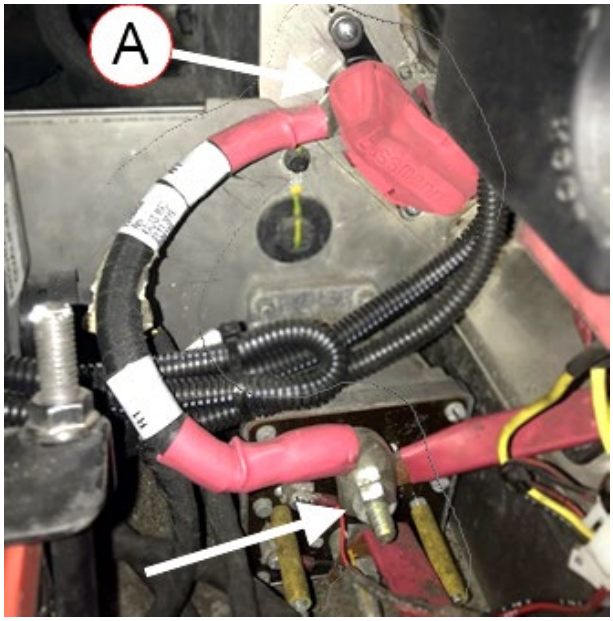

FIGURE 188

158. In the upper part of the electrical compartment, attach the cables and harnesses as shown. Use the following hardware
   - ***nylon tie #504016 (3x)***

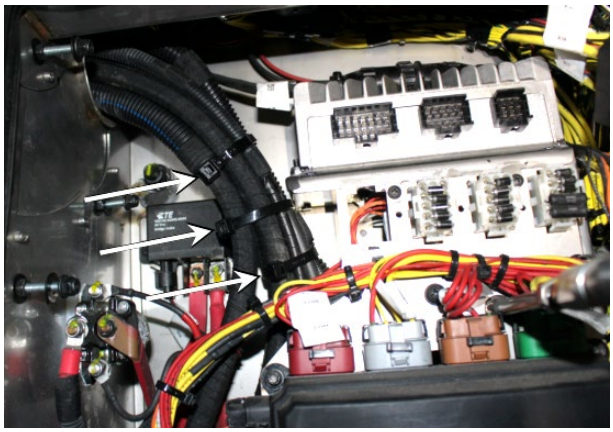

FIGURE 189

159. On harness #23490553, cut the three ring terminals and replace by three (3) terminals #561608.
160. In the main power compartment, locate connector **CCUST**.
161. Unplug the socket terminal connector of CCUST. Insert the three (3) terminals in the connector.

circuit 24VI in cavity #1
circuit 24 VD in cavity #3
ground circuit in cavity #4

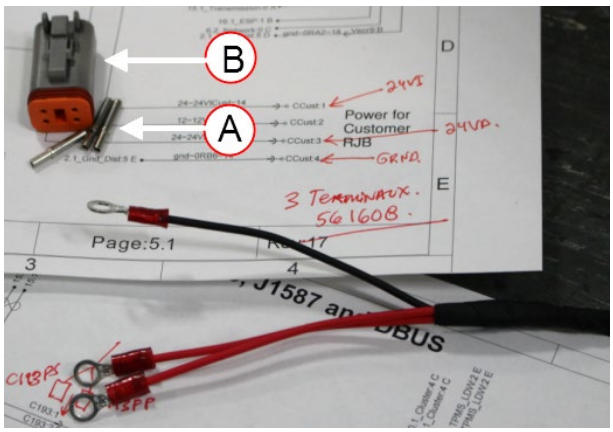

FIGURE 190

A: terminal #561608 (3x)

B: socket terminal connector of CCUST

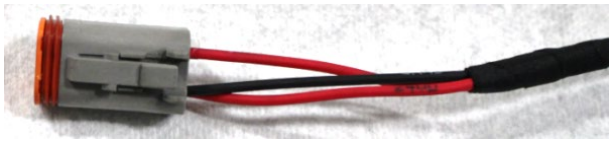

FIGURE 191

162. In the main power compartment, connect the “fan to RJB interface harness” to the “MCM to I/O-B interface harness” #23445869 by means of connector C-EFD1.
163. Connect the MCM and the I/O-B module together using the “MCM to I/O-B interface harness” #23445869.
164. Connect the OEL resistors connector **RES1F** and **RES2F** (part #563593) to the “MCM to I/O-B interface harness”. See the image at right and the following pictures for reference.

Use nylon ties as required, ideally one nylon tie every 6 inches.

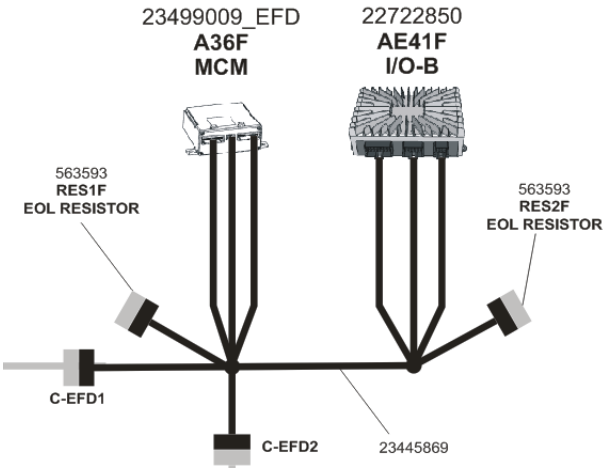

FIGURE 192

FIGURE 193

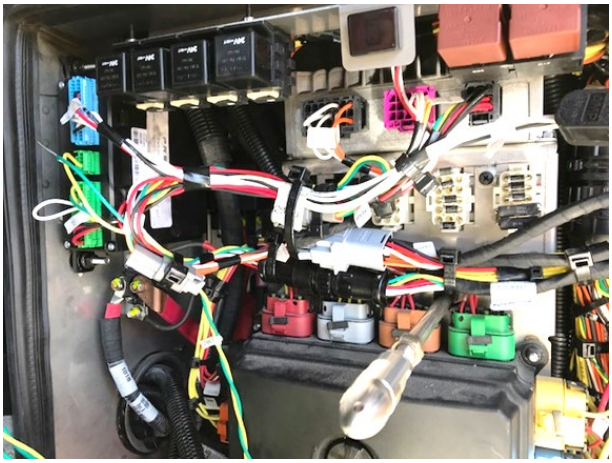

FIGURE 194

165. In the main power compartment, connect the "**vehicle interface harness" #23490553** to the "MCM to I/O-B interface harness" by means of connector C-EFD2.

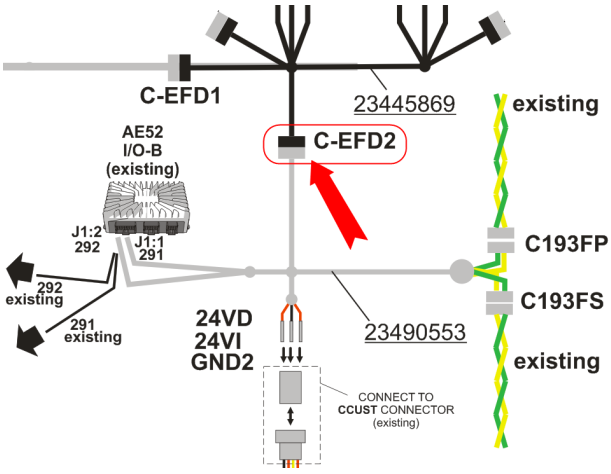

FIGURE 195

166. Plug the socket terminal connector previously installed to the CCUST existing in the main power compartment.

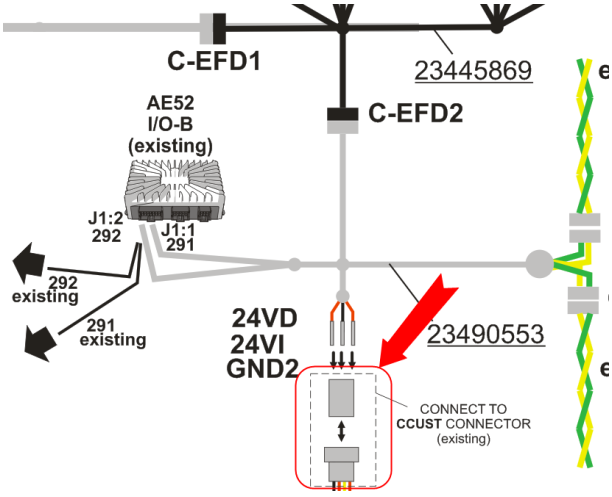

FIGURE 196

167. Get the J1939 signal. To do so, locate connector C193 among the existing harnesses of the main power compartment.

168. Disconnect connector C193 and connect with C193FS and C193FP of the "**vehicle interface harness" #23490553**.

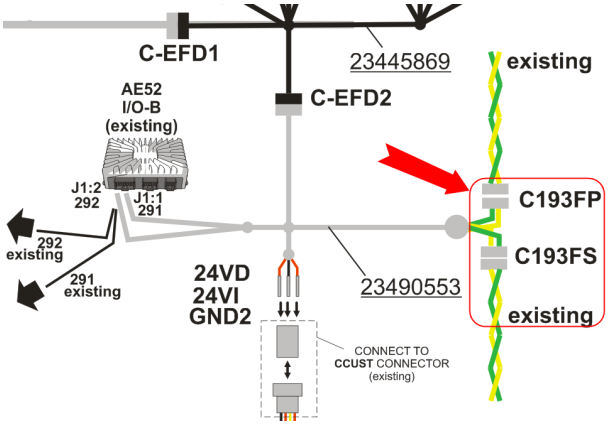

FIGURE 197

169. In the main power compartment, locate I/O-B module A52 (alternately named AE52).
170. At **A52** (or AE52), remove existing circuit 291 and 292 from connector J1:1 (pin 1) and J1:2 (pin 2).
171. For each circuit, cut the terminal and put a heat shrinking sleeve at the end of the wire. Those circuits won't be used anymore.
172. Insert circuit 291 and 292 of the "**vehicle interface harness" #23490553** into connector J1 pin 1 and J1 pin 2 respectively.

Use nylon ties as required to secure harness #23490553

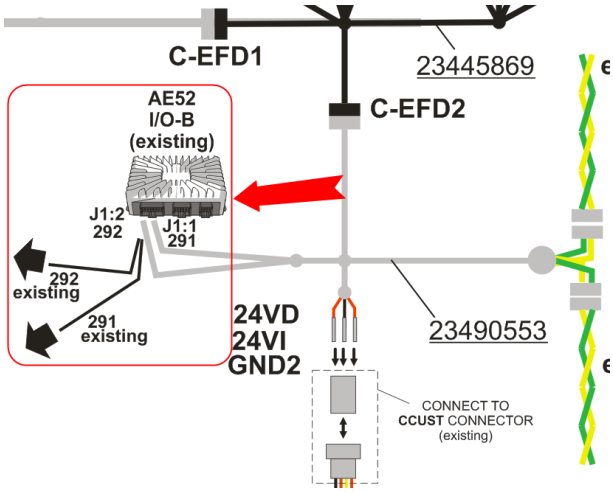

FIGURE 198

173. Install two tab terminals #561540 on the 24V red telltale light module (#830165) wires.
174. Install the telltale light module in the telltale module bracket #381594. Using a P-Touch, make a label indicating "LH ALT".
175. Connect the branch of FAN TO RJB INTERFACE HARNESS identified **ALT-L** to the telltale light module.

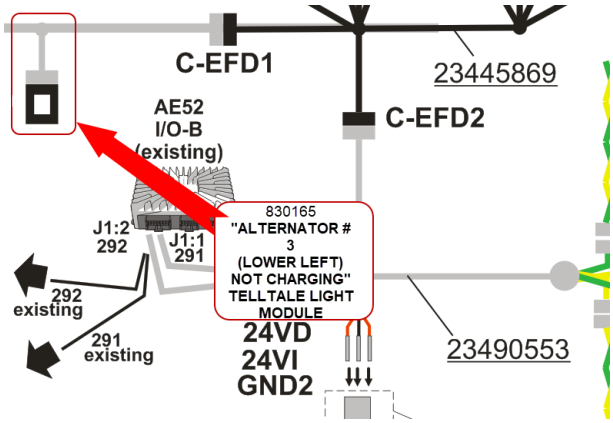

FIGURE 199

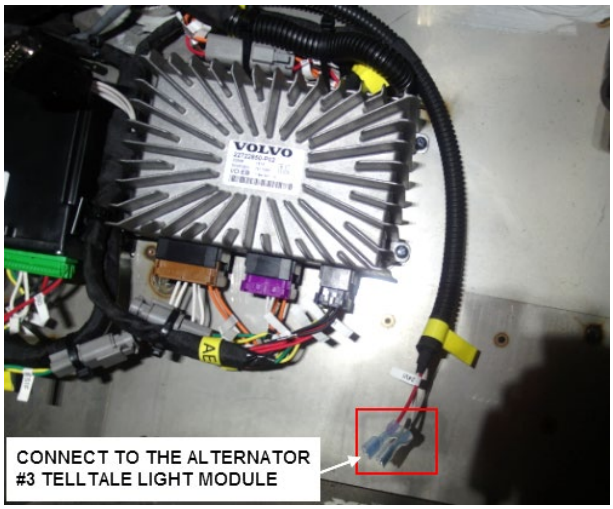

FIGURE 200

176. There are remaining nylon ties and tie mounts in the kit. Use them to secure the harnesses and cables that may seem loose. The goal is to prevent rubbing of the cables and harnesses.
177. Tighten all the nylon ties that were left loose, for example, the one between the fan circuit

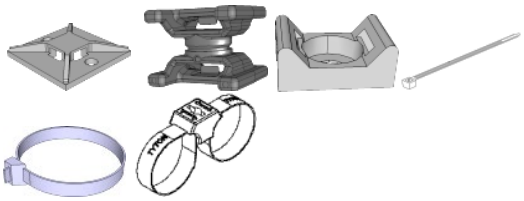

FIGURE 201

breakers box and the main power compartment.

178. Place one (1) warning decal #069205 as shown on the image.

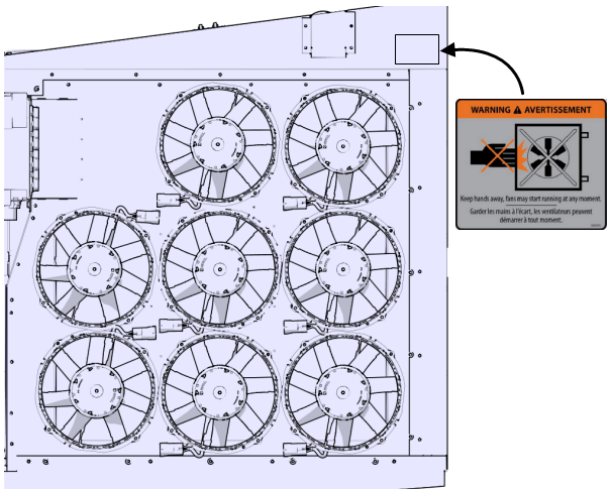

FIGURE 202

179. Install a second warning decal #069205 as shown on the radiator door.

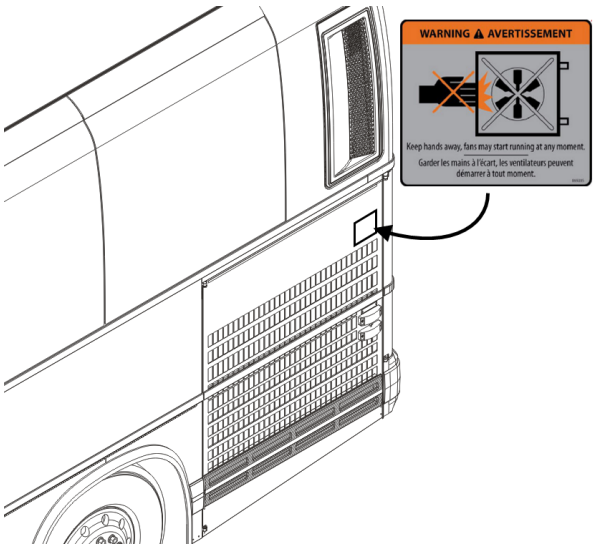

FIGURE 203

180. Fasten the radiator door **upper arm assembly**.

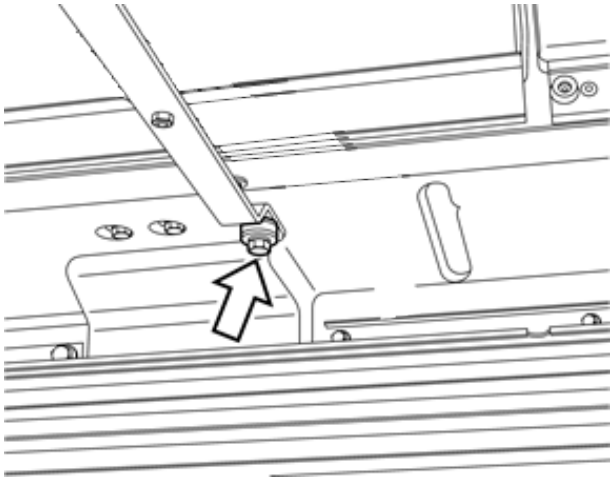

FIGURE 204

181. Refill the cooling system. Connect coolant extractor. Use coolant extractor to refill the coolant from the engine.

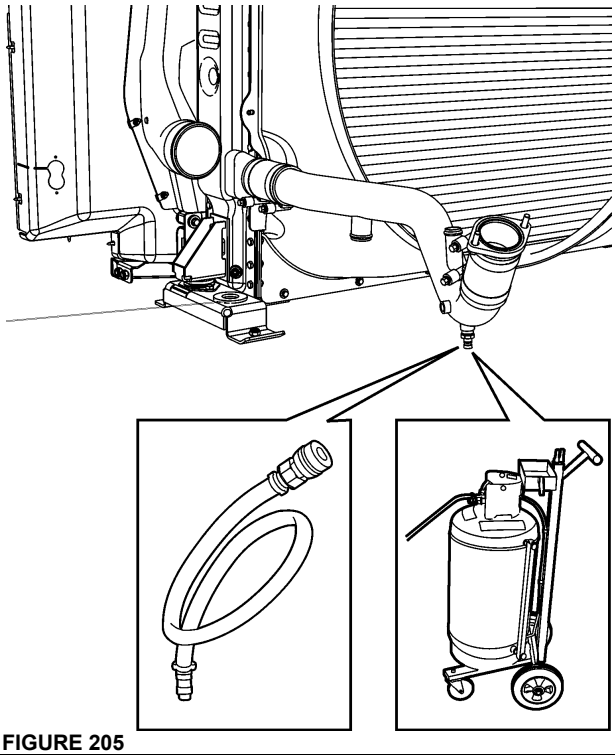

FIGURE 205

182. Reinstall the bumper.

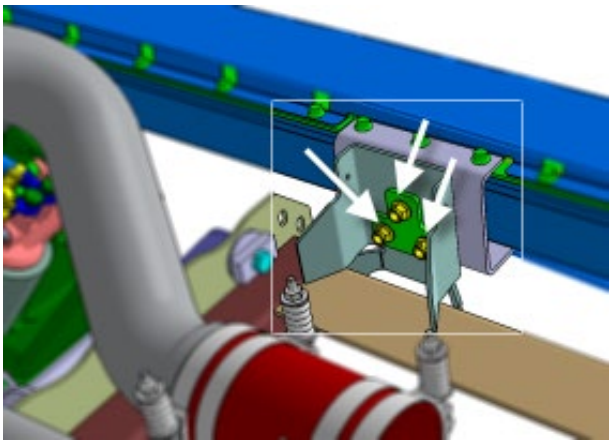

FIGURE 206

183. Reinstall the **access panel** located behind tag axle L.H. side wheel.

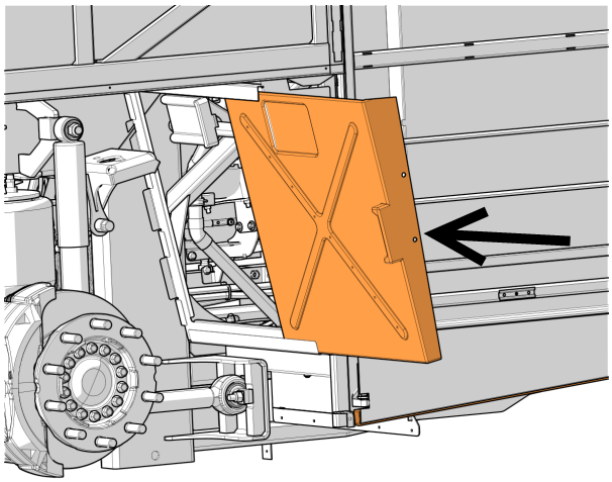

FIGURE 207

184. In the battery compartment, connect the battery ground cable to the chassis ground stud.

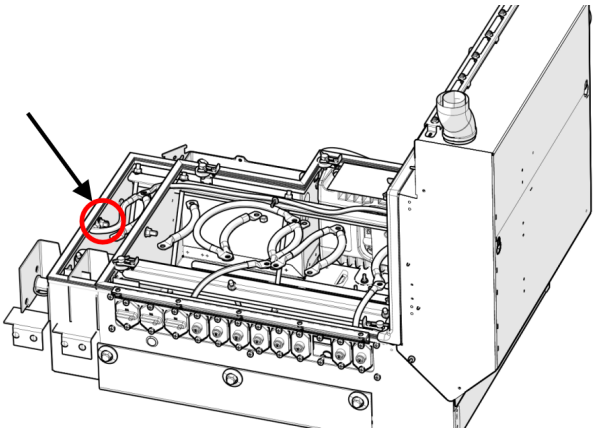

FIGURE 208

185. Set the battery master switch to the ON position.
186. Set the ignition switch to the ON position.
187. In the main power compartment, reset the circuit breakers and wait two (2) minutes for the new installer I/O-B module to be programed.

IMPORTANT NOTE

VEHICLES EQUIPPED WITH OPTIONAL PRIME ENERGY MANAGEMENT SYSTEM

TO PREVENT OVERLOADING THE L.H. SIDE ALTERNATOR, IT IS VERY IMPORTANT TO DISABLE « PRIME » SYSTEM ON VEHICLES RECEIVING THIS CONVERSION. PLEASE CONTACT YOUR NEAREST PREVOST SERVICE CENTER TO HAVE THE PRIME SYSTEM DISABLED.

SYSTEM TEST

188. Start the engine to idle.
189. With the engine in idle (600 rpm), use the Diagnostics menu of the Driver Information Display to engage the fans in speed 1.

Diagnostics > Vehicle Tests > Activate Radiator FAN Speed 1

The height (8) fans should run at 50% of the maximum speed. You need to evaluate the sound level and the power of the air stream to determine the speed.

190. Engage the fans in speed 2.

Diagnostics > Vehicle Tests > Activate Radiator FAN Speed 2

The eight (8) fans should run at 75% of the maximum speed.

191. Set the engine to the fast idle, the fans should then engage at 100% of the maximum speed.
192. If the fans behave in accordance with the criteria of the previous steps, then they operate normally.

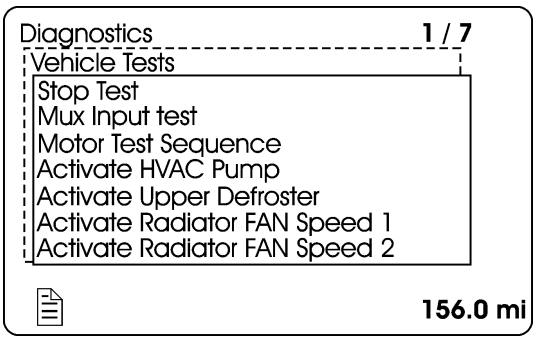

FIGURE 209

PARTS / WASTE DISPOSAL

Discard waste according to applicable environmental regulations (Municipal/State[Prov.]/ Federal)