September 3, 2021 Version 3

Product Update: 2018 Odyssey Rear Power Window Switches

Supersedes 17-090, dated September 4, 2019, to revise the information highlighted in yellow

AFFECTED VEHICLES

Year	Model	Trim	VIN Range
2018	Odyssey	ALL except LX	Check the iN VIN status for eligibility.

REVISION SUMMARY

Under REPAIR PROCEDURE, step 4 was revised.

BACKGROUND

Under certain conditions, the rear window switch internal software enters an unstable condition and cannot recover, making the window switch inoperable.

CUSTOMER NOTIFICATION

Owners of affected vehicles will be sent a notification of this campaign.

Do an iN VIN status inquiry to make sure the vehicle is shown as eligible.

Some vehicles affected by this campaign may be in your new or used vehicle inventory. Repair these vehicles before they are sold.

CORRECTIVE ACTION

Replace both the left rear and right rear power window switches located on the power sliding doors.

PARTS INFORMATION

Part Name	Part Number	Quantity
Right Rear Power Window Switch Assembly	35770-THR-A11	1
Left Rear Power Window Switch Assembly	35780-THR-A11	1

CUSTOMER INFORMATION: The information in this bulletin is intended for use only by skilled technicians who have the proper tools, equipment, and training to correctly and safely maintain your vehicle. These procedures should not be attempted by “do-it-yourselfers,” and you should not assume this bulletin applies to your vehicle, or that your vehicle has the condition described. To determine whether this information applies, contact an authorized Honda automobile dealer.

© 2021 American Honda Motor Co., Inc. — All Rights Reserved

WARRANTY CLAIM INFORMATION

Operation Number	Description	Flat Rate Time	Defect Code	Symptom Code	Template ID	Failed Part Number
7441D5	Replace both right rear and left rear power window switches.	0.6 hr	6PW00	U0D00	A17090A	35780-THR-A11

Skill Level: Repair Technician

REPAIR PROCEDURE

NOTE: The repair procedure illustrations shows the left rear power window switch removal and replacement, the right rear power window switch removal and replacement will mirror these illustrations.

1. Turn the power sliding door power off by sliding the switch down.

2. Use a wire hook to pull the clip off of the inner handle shaft, and remove the inner handle.

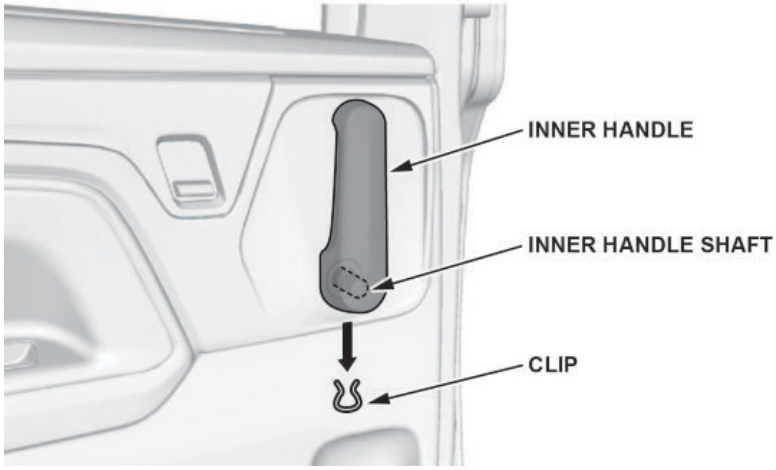

3. Push the door lock knob down to the locked position to prevent the door lock knob from being damaged when removing the door pane

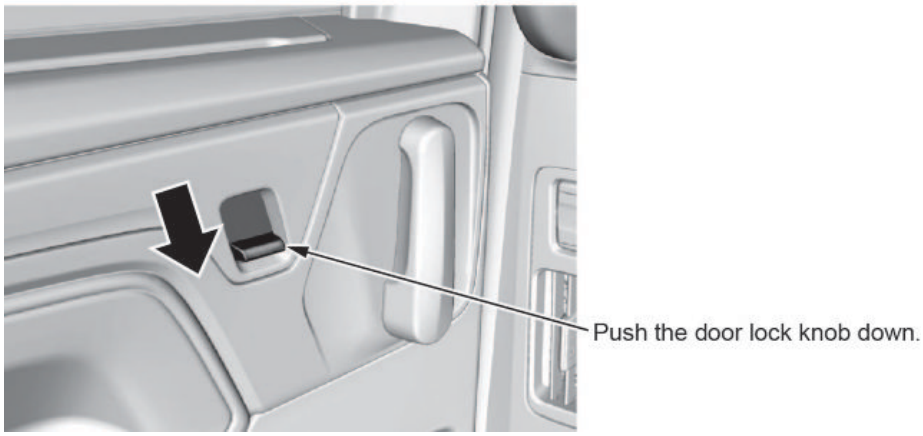

4. Using a trim pad remover, remove the 2 clips at the bottom of the door panel. Then, release the door seal from the door panel.

   NOTE: Removing the two clips prevents pulling the door seal off the door as the door panel is lifted and removed.

   Revised Image

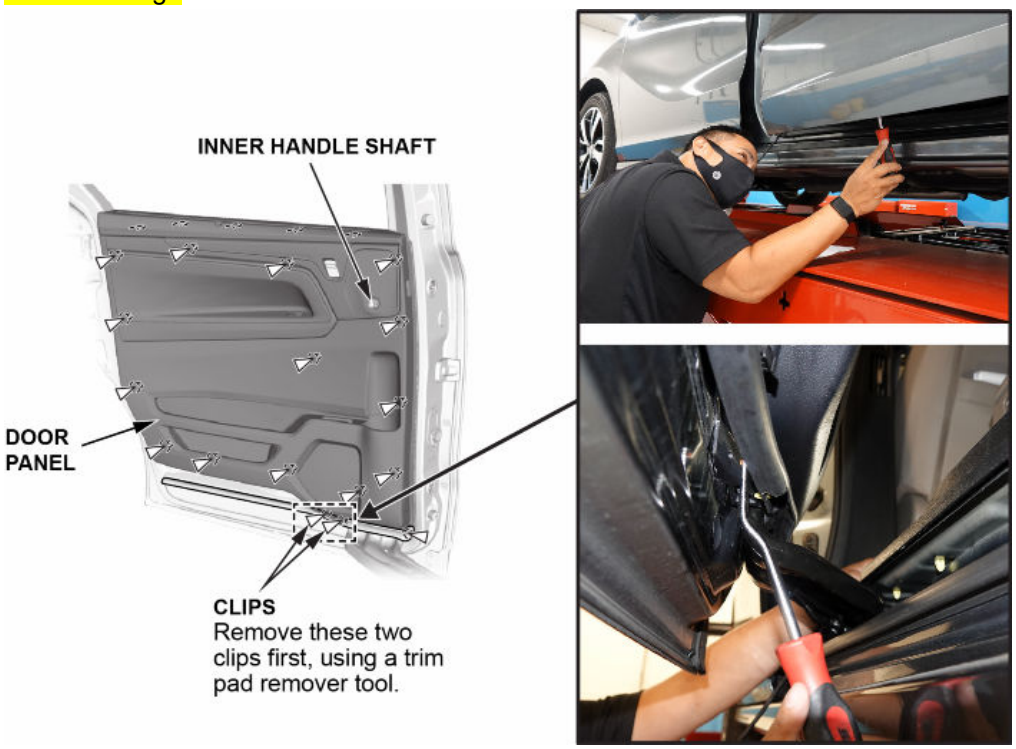

5. Start at the bottom edge of the door panel, and remove the remaining clips with a commercially available trim pad remover.

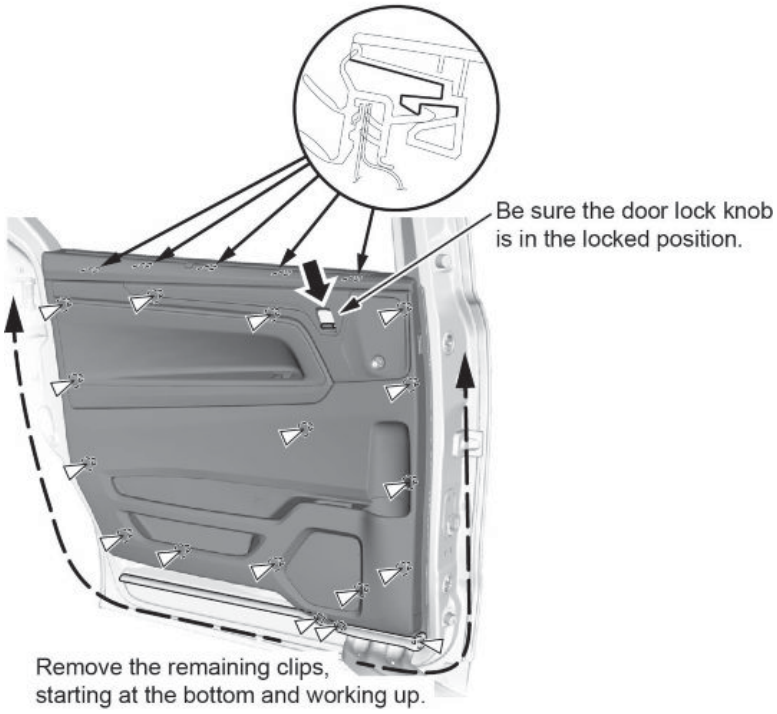

6. Starting at the rear, pull the door panel upward making sure the clips from step 4 are free and not pulling on the lower door seal. Pull the door panel away from the inner handle shaft, and lift it.

   NOTE: To prevent damage to the door lock knob, make sure it is in the locked position.

7. While holding the sliding door panel away from the door, disconnect the connector. Then, remove the door panel.

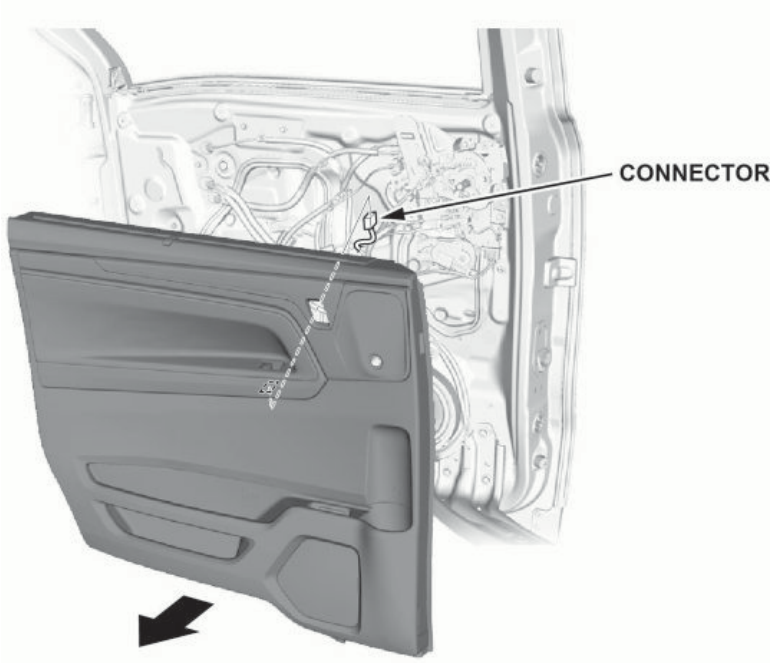

8. Make sure the door lock knob properly engages the bracket. If it is disengaged, disconnect the rod from the slider, reinstall the slider, then connect the rod.

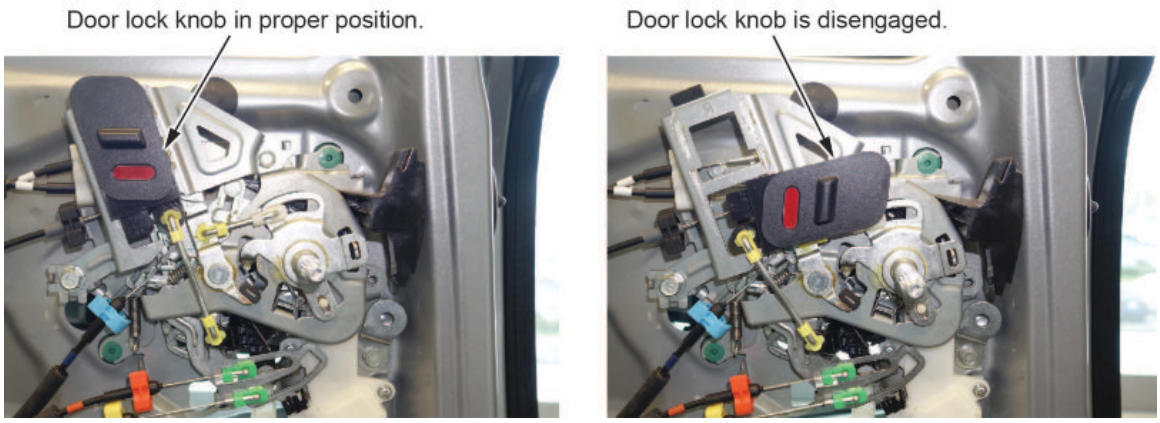

9. Remove the two screws securing the switch to the door liner, and install a new switch.

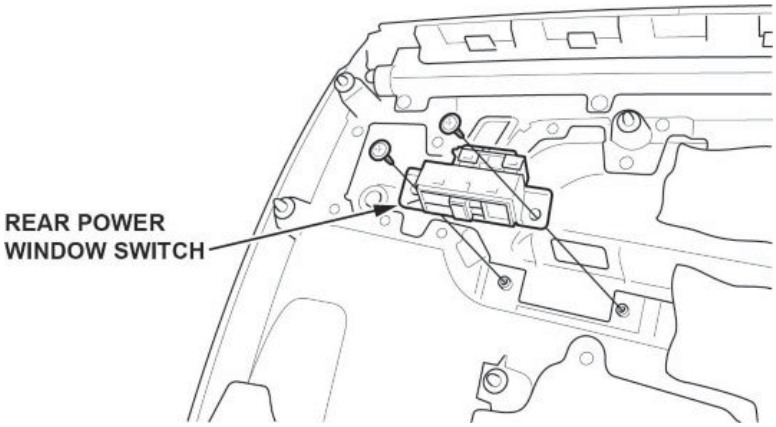

10. Install the door liner in the reverse order of removal, and make sure of the following:
    - The door switch wire harness is connected.
    - All of the clips on both the door liner and lower door seal are set.
11. Repeat steps 2 thru 10 for the right rear window switch.

12. Turn the power sliding door power to ON by sliding the switch up.
13. To reset the power window control unit, turn the ignition to ON.

14. Lower the power window all the way using the power window down switch.
15. Raise the power window all the way using the power window up switch, and hold the switch for at least **1 second**.
16. Make sure each rear windows' auto up/down feature works correctly using the respective rear window switch.
17. Make sure each rear windows' auto up/down feature works correctly using the driver's power window master switch.

END