PREVOST

Instruction Sheet IS-19912C

ELECTRIC FAN DRIVE COOLING SYSTEM CONVERSION WITH DELCO REMY ALTERNATOR

X3 coaches (2PCG…), X3 VIP with big A/C system (2PCB…, 2PCC…) US10 to GHG17 (B-5002 to H-6179)

REVISION: C
July 05-21

THIS DOCUMENT SUPERSEDES PREVIOUS VERSION.
Fan drive power cable 069245 replaced by 0610563

REVISION: B
June 17-20

THIS DOCUMENT SUPERSEDES PREVIOUS VERSION.
Parts obsolete: 050303, 391028, 562112
Replaced by:

830165	24V RED TELLTALE LIGHT MODULE	QTY: 1x
381594	BRACKET, TELLTALE	QTY:1x
561540	TAB TERMINAL, ST,16-14,1/4 INS	QTY: 2x

REVISION: A
Jan 24-20

THIS DOCUMENT SUPERSEDES PREVIOUS VERSION.
Mention added stating to disable "Prime"
Parts added in the kit:

053662	TURBO DIFFUSER PIPE	QTY: 1x
21096684	GASKET, TURBO OUTLET	QTY:1x
20592787	CLAMP, DIFFUSER V-BAND DIA.	QTY:1x
506080	BELT, DRIVE POLY V 8PK1575	QTY: 2x

IMPORTANT NOTE

VEHICLES <u>EQUIPPED</u> WITH OPTIONAL PRIME ENERGY MANAGEMENT SYSTEM

TO PREVENT OVERLOADING THE L.H. SIDE ALTERNATOR, IT IS VERY IMPORTANT TO DISABLE « PRIME » SYSTEM ON VEHICLES RECEIVING THIS CONVERSION. PLEASE CONTACT YOUR NEAREST PREVOST SERVICE CENTER TO HAVE THE PRIME SYSTEM DISABLED. A SOFTWARE TOOL IS NEEDED TO DO SO.

Recommended Alternator Conversion Kits

Take note that you can install a Delco Remy 55SI 24V-250A alternator on the engine curbside using one of the follow recommended installation kit:

Kit:	*IS19913*	*Applicable to: X3 Series, US10*
Kit:	*IS19909*	*Applicable to: X3 Series, from E-5459*

MATERIAL

Kit **IS19912** contains the following parts:

Part No.	DESCRIPTION		Qty
050343	FAN SUPPORT PANEL		1
050355	UPPER SHROUD TRANSITION		1
050359	LEFT SHROUD TRANSITION		1
050360	RIGHT SHROUD TRANSITION		1
050362	LOWER SHROUD TRANSITION		1
050363	LOWER LEFT SHROUD PANEL X3 US10+		1
050364	UPPER LEFT SHROUD PANEL & WURTH BOX SUPPORT X3 US10+		1
050365	LOWER SHROUD PANEL X3 US10+		1
050366	UPPER SHROUD PANEL X3 US10+		1
050367	RIGHT SHROUD PANEL		1
050369	PULL ROD BOX		1
050380	UPPER LEFT SHROUD TRANSITION PANEL		1
050415	UPPER LEFT SHROUD PANEL		1

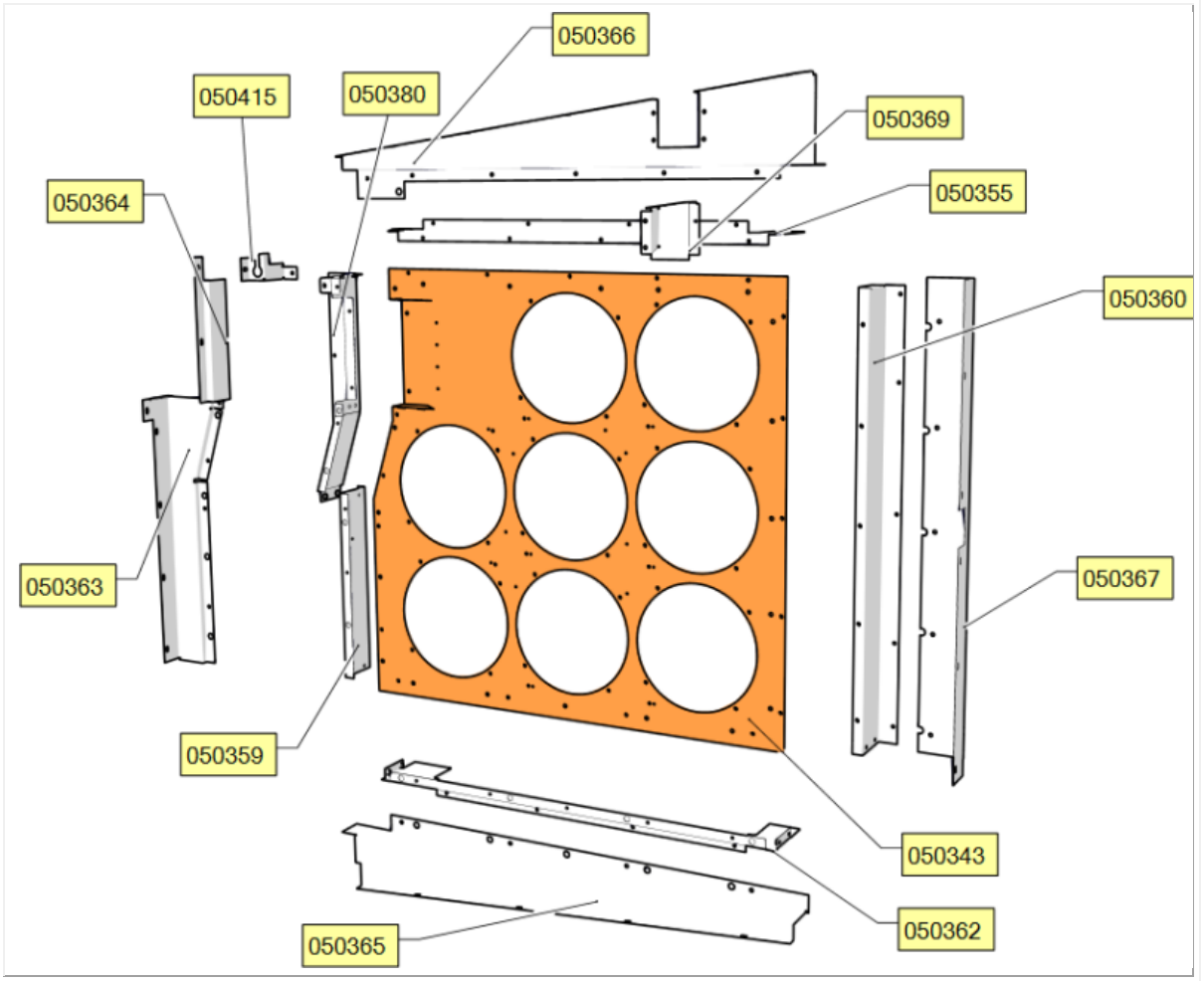

	MECHANICAL		
012349	IDLER PULLEY		1
012941	PULLEY, DRIVE 10 RIBS		1
010090	L.H. ENGINE MOUNT	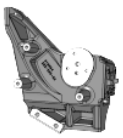	1
011213	SUPPORT, IDLER + TENSIONER	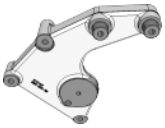	1

069893	PULLEY, DELCO REMY ALTERNATOR 10PK 69 DOB	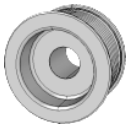	1
453076	CAP, DUST		1
506067	1x BELT 10PK1703 ARAMIDE 1x BELT 10PK1703 ARAMIDE (for your spare kit)		2
506080	1x BELT, DRIVE POLY V 8PK1575 1x BELT, DRIVE POLY V 8PK1575 (for your spare kit)		2
510991	TENSIONER, BELT	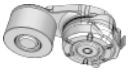	1
560720	DELCO REMY ALTERNATOR 55 SI 24 V-250A		1
	PIPES		
050308	CAC OUTLET PIPE X3 US10+		1
050309	RADIATOR INLET COOLANT PIPE X3 US10+		1
050328	CAC INLET PIPE X3 US10+		1
050331	RADIATOR OUTLET PIPE X3 US10+		1
053662	TURBO DIFFUSER PIPE, STRAIGHT	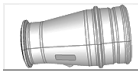	1
	HOSES		
052366	HOSE 3/8 ID X 61 in (1550 mm) LONG		1
030096	HOSE, FLEXIBLE - CHARGE AIR Location: turbo outlet & engine intake	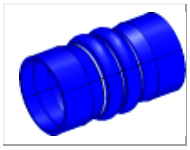	2
531469	HOSE, FLEXIBLE - CHARGE AIR Location: CAC outlet		1
531471	HOSE, FLEXIBLE - CHARGE AIR Location: CAC inlet		1

052889	HOSE, SILICONE 2 1/2" ID Location : coolant pipes		1
053617	HOSE, SILICONE Location : coolant pipes		3
	CLAMPS+ SEALS		
992081	HOSE CLAMP CT CAILLAU 12-22 Location : coolant filter hoses		4
992086	HOSE CLAMP CT CAILLAU Location :	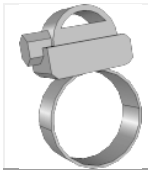	2
992089	HOSE CLAMP CT CAILLAU 60 mm-80 mm Location : coolant pipes		16
1675066	SEALING RING CHARGE AIR HOSE Location: Engine intake elbow		2
20592783	CLAMP, CHARGE AIR HOSE D100 V-CLAMP DIA. 107.7 Location: Engine intake elbow		2
20592787	CLAMP, TURBO DIFFUSER PIPE V-BAND DIA. 81.7 Location: Turbo to diffuser pipe connection		1
21021850	CLAMP, EXHAUST PIPE V-BAND 5 INCHES	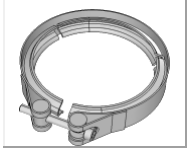	2
21095726	GASKET EXHAUST PIPE V-BAND JOINT, 5 INCHES	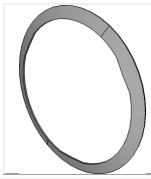	2

21096684	GASKET, TURBO OUTLET Location: Turbo to diffuser pipe connection		1
21490616	CLAMPS, SPRING LOAD - CHARGE AIR Location: CAC outlet & inlet		8
21490630	CLAMP, SPRING LOAD - CHARGE AIR Location: turbo outlet & engine intake	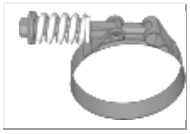	4
	SUPPORTS/BRACKETS		
050265	COOLANT FILTER SUPPORT H3	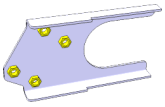	1
050351	UPPER RADIATOR SUPPORT X3	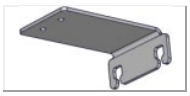	1
053040	SUPPORT, COOLANT SURGE TANK	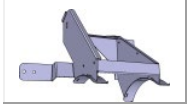	1
053043	SUPPORT, I/O MODULE		1
069890	LH LOWER ALTERNATOR SUPPORT	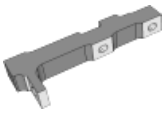	1
069891	LH UPPER ALTERNATOR SUPPORT		1
381594	U-SHAPED BRACKET, ALTERNATOR TELLTALE		1
21185073	MOUNT, ANTI-VIBRATION	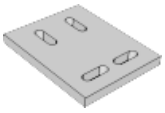	1
	MISC.		
010111	DECAL, BELT ROUTING	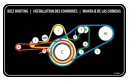	1
069205	DECAL, WARNING		2
506025	RUBBER EXTRUSION, BLACK	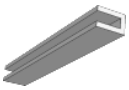	8 ft

380360	GROUND STUD	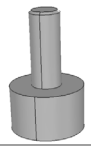	1
506040	TAPE, ADHESIVE AD1 EPDM CC GY 5/16"X3/4"X25'		1
21937327	FILTER, COOLANT		1
	ELECTRICAL		
012921	GROUND STUD		1
561540	TERMINAL, TAB	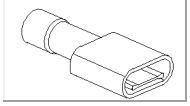	2
561608	TERMINAL		4
561610	CONNECTOR HOUSING, PED WEATHER PACK 4 WIRES		1
561783	CAVITY PLUG, CONNECTOR	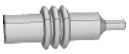	4
563593	CONNECTOR, WITH END-OF-LINE 120 OHMS RESISTOR	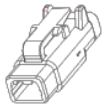	2
563750	FUSE HOLDER, AMG TYPE	Electrical	1
564520	FUSE, AMG 300A		1
564612	CIRCUIT BREAKER BOX	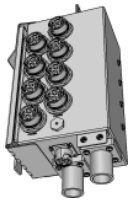	1

565191	FAN, ELECTRIC		8
563533	HAND GUARD, FAN		8
830165	24V RED TELLTALE LIGHT MODULE		1
22722850	I/O-B MULTIPLEX MODULE	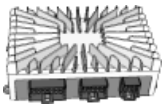	1
23499009_EFD	MCM, PROGRAMED	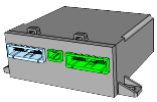	1
	HARNESSES		
068820	HARNESSES KIT, FAN DRIVE		1
0610563	FAN DRIVE POWER CABLE, 2855 mm	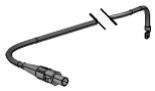	1
069246	GROUND CABLE, FAN DRIVE	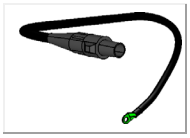	1
0610035	GROUND CABLE, LEFT ALTERNATOR		1
0610037	CONTROL CABLE, LEFT ALTERNATOR		1
0610053	ALTERNATOR POWER CABLE	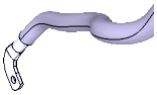	1
23445869	MCM TO I/O-B INTERFACE HARNESS		1
23488790	FAN TO RJB INTERFACE HARNESS		1
23490553	VEHICLE INTERFACE HARNESS		1
23498450	MASTER RELAY TO 300A FUSE CABLE, 300 mm		1
	HARDWARE MISC		

N37749	TIE, NYLON DOUBLE		12
504016	TIE, NYLON BLACK (LARGE)		58
509491	TIE, NYLON LARGE EXTRA STRONG 250 LBS		30
504013	MOUNT, TIE HOLE 1/4"	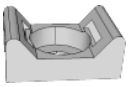	15
504751	MOUNT, TIE SWIVEL		4
504750	CABLE TIE W/FIR TREE MOUNT(120 POUNDS)		2
509490	MOUNT, TIE DOUBLE GRAY		17
562679	MOUNT, SQUARE SELF-ADHESIVE BLACK	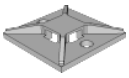	4
5001965	SPRING NUT	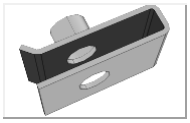	18
	RIVETS		
504117	RIVET, POP DOME AL CLE 3/16x3/8	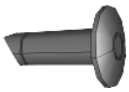	5
504379	RIVET, POP DOME SS OE 3/16x1/4	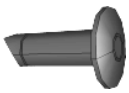	20
504610	RIVET MGL PRDG SS 1/4x5/8		18
	WASHER		
500321	WASHER, FLAT SPR N500 .331X.827X.098(M8,5/16)		1
500449	WASHER, FLAT SS .687X1.5X0.078 (M16,5/8)		1
500411	WASHER, FLAT SS .260X.697X.05 (M6,1/4)		1

500482	WASHER, SPLIT LOCK Z050 .506X.873X.125 (M12,1/2)		1
500942	WASHER, SPLIT LOCK N500 8.1X14.8X2 (M8,5/16,#18)		4
502570	WASHER, SPLIT LOCK SS 6.1X11.8X1.6 (M6,#12)		85
502573	WASHER , FLAT SS 6.4 X 12.0 X 1.6 (M6,1/4)		1
502709	WASHER, FLAT N050 .260X.688X.05 (M6,1/4)		9
507657	WASHER, BANJO FITTING M14		8
5001137	WASHER , FLAT SS .203X.438X.06 (M5,#10)		2
5001341	WASHER, FLAT SS 8.4X17X1.6 (M8,5/16)		7
5001737	WASHER, SPLIT LOCK N500 10.2X18.1X2.2 (M10,3/8)		4
5001751	WASHER, FLAT N500 10.5X26X2 (M10,3/8)		10
5001833	WASHER, BELLEVILLE SPR SS 301 6.65X17.4X1.27(M6,1/4		32
5001868	WASHER, BELLEVILLE SS 8.4X18X2 (M8,5/16)		4
5001935	WASHER, FLAT SS 10.5X18X1.6 (M10,3/8)		1
5002008	WASHER, FLAT HARD N500 13X35X5 (M12,1/2)		1
	NUTS		
500998	NUT HEX BR 1/2-13		1
500685	NUT HEX NYRT SS 5/16-18		1
502837	NUT HEXF STO N500 M8-1.25		2
502854	NUT HEX N500 M6-1		3
502859	NUT HEX NYRT NX500 M10-1.5 G10		4
5001180	NUT HEX NYRT SS 10-24		6
5001182	NUT HEX NYRT SS M6-1		1
5001665	NUT HEX NYRT NX500 M22-2.5		1
5001761	NUT HEXF NYRT NX500 M12-1.75 G8		4
5001930	NUT HEXF NYRT NX500 M10-1.50 PC 10		2
5001932	NUT HEXF NYRT NX500 M6-1 G8.8		3
5001983	NUT HEX NYRT NSS M8-1.25X9.5		5

	SCREWS		
500119	SCREW, CAP HEX SS NSS M8X1.25X20		4
500594	SCREW 7/16-20X1.25 G8		1
500623	SCREW, THREAD CUTTING PAN PH 10-24X3/4		2
500658	SCREW TC PAN PH Z050 10-24X3/4		11
502719	SCREW, CAP HEX SS NSS M10X20 G8.8		1
502686	SCREW, CAP HEX SS NSS M6X30		33
502804	SCREW, CAP HEX N500 M10-1.5X25 G8.8		8
502888	SCREW, HEX Z050 M6-14X35 G8.8		3
502848	SCREW TC HEX F N500 1/4-20X3/		22
5001296	SCREW, CAP HEXFN500 M12-1.75 X 80 CL10.9 PT		6
5001308	SCR CAP HEXF N500 M10-1.5X40 G10.9		4
5001447	SCREW, MACHINE HEX SS NSS 10-24 X5/8 PT		4
5001643	SCREW, CAP HEXF G500 M8-1.25X25 G8.8 PT		3
5001697	SCREW, CAP HEX SS NSS M6X16		85
5001738	SCREW, CAP HEX N500 M8X30 G8.8 FT		4
5001745	SCREW, CAP HEX N500 M8-1.25X25 G8.8		2
5001786	SCREW, CAP HEXF AD N500 M12-1.75X30 G8.8		1
5001799	SCREW, CAP HEXF N500 M10-1.5 X 70 G10.9		4
5001940	SCREW CAP HEX N500 M12X1.75X140		4
5002091	SCR CAP HEXF N500 M10-1.5X120 G10.9		4
	INSTRUCTIONS		
IS-19912	INSTRUCTION SHEET		1
FI-19912	FEUILLE D'INSTRUCTION		1

Other parts or products that may be required:

Part No.	DESCRIPTION
680459	Loctite 404, INSTANT ADHESIVE 9.3 gr

680098	LOCTITE 567 THREAD SEALANT 250 ML
680038	LOCTITE 243, BLUE THREAD LOCKER 50 ML
684013	LOCTITE COLOR GUARD RUBBER COATING

PROCEDURE

DANGER

Park vehicle safely, apply parking brake, stop the engine. Prior to working on the vehicle, set the ignition switch to the OFF position and trip the main circuit breakers equipped with a trip button.

PREVOST

DIAGRAM OF ELECTRICAL CONNECTIONS

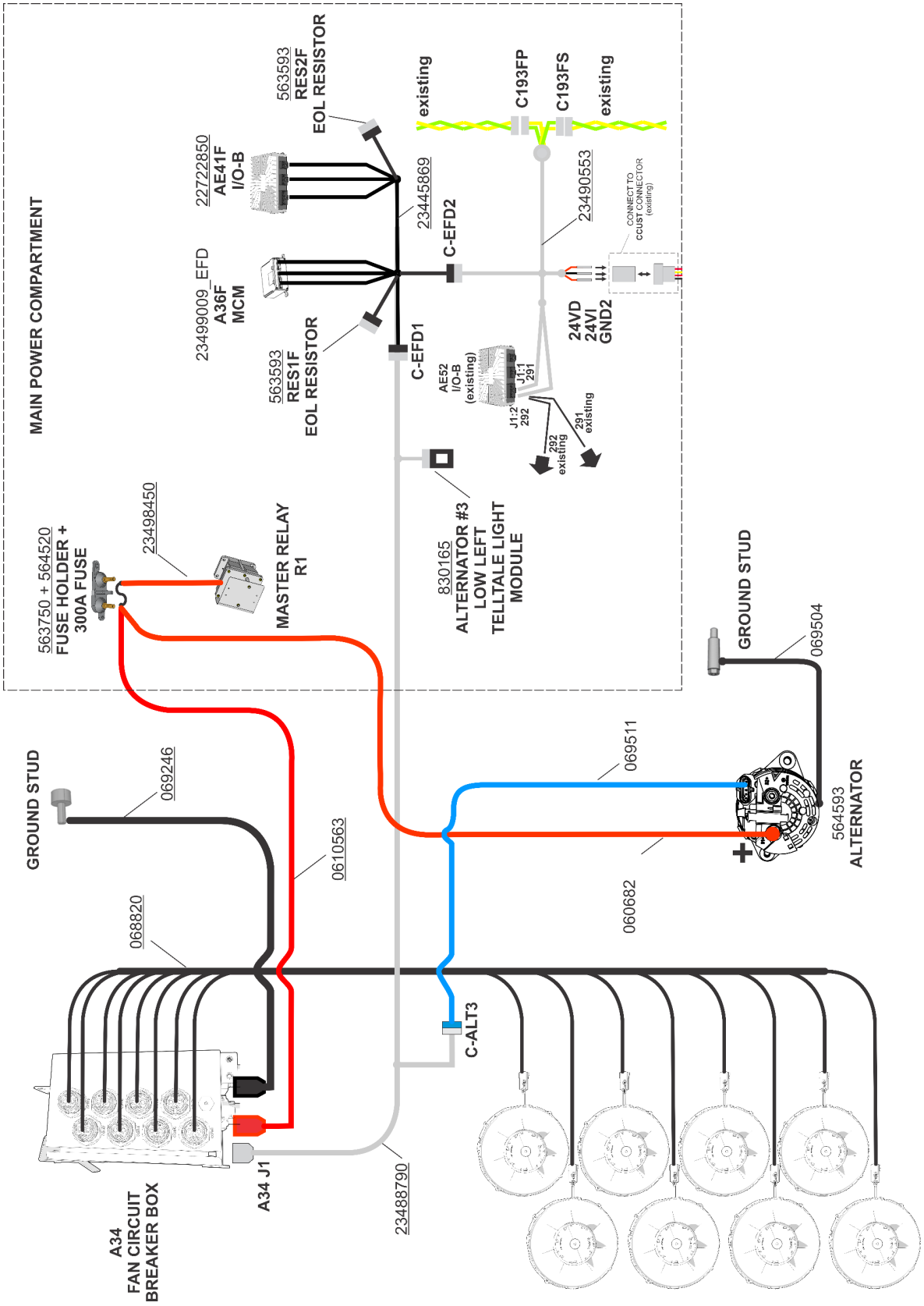

HOSE CLAMP TORQUE (coolant lines and charge air cooler)

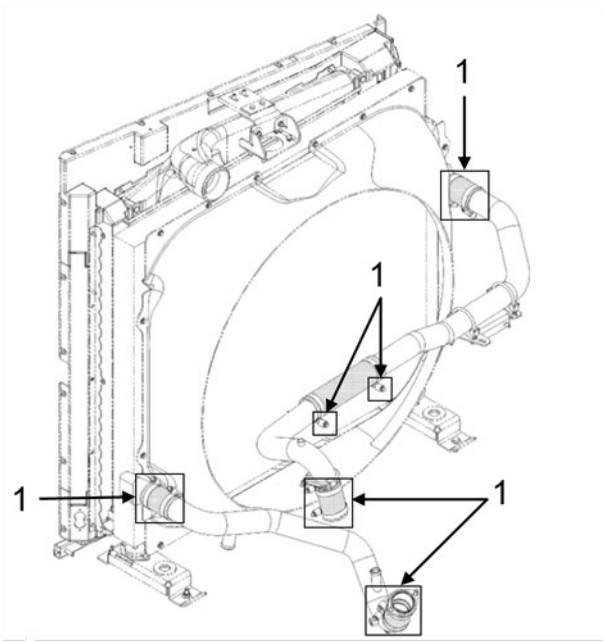

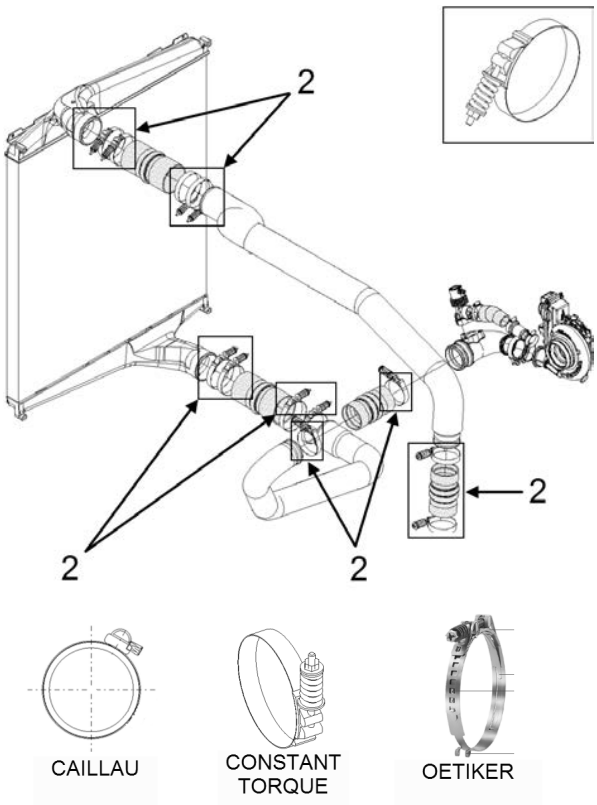

HOSE CLAMPS		
No	DESCRIPTION	TORQUE
1 (Ø 2 ½ ” or less)	Constant-Torque hose clamps - coolant lines Oetiker hose clamps – Green spring - coolant lines Oetiker hose clamps – unpainted spring - coolant lines Caillau hose clamps - coolant lines	90-100 lbf-in 12-18 lbf-in 8-9 lbf-in 30 lbf-in
2 (Ø 4 ¼ ”)	Constant-Torque hose clamp 4.25 in - charge air cooler (CAC)	4.5-5.5 lbf-ft

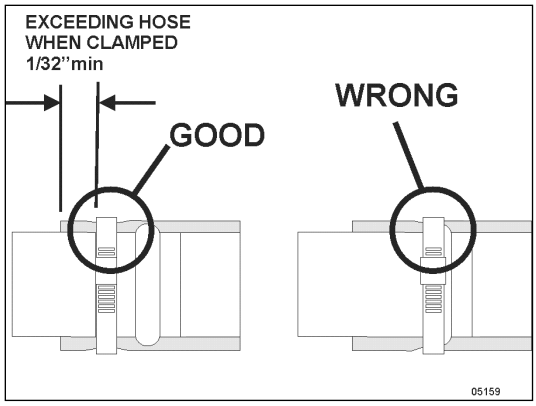
EXCEEDING HOSE
WHEN CLAMPED
1/32''min
GOOD
WRONG
05159

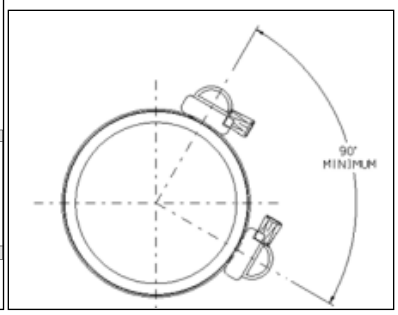
90°
MINIMUM

1. Raise the L.H. side **rear-hinged fender**.

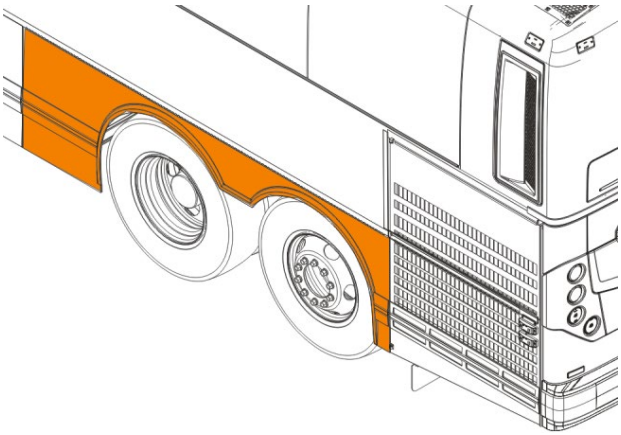

FIGURE 1

Drain the cooling system

2. Connect the coolant extractor. Use the coolant extractor to drain the coolant from the engine. An alternate method is to drain the coolant into a suitable container using the drain hose.

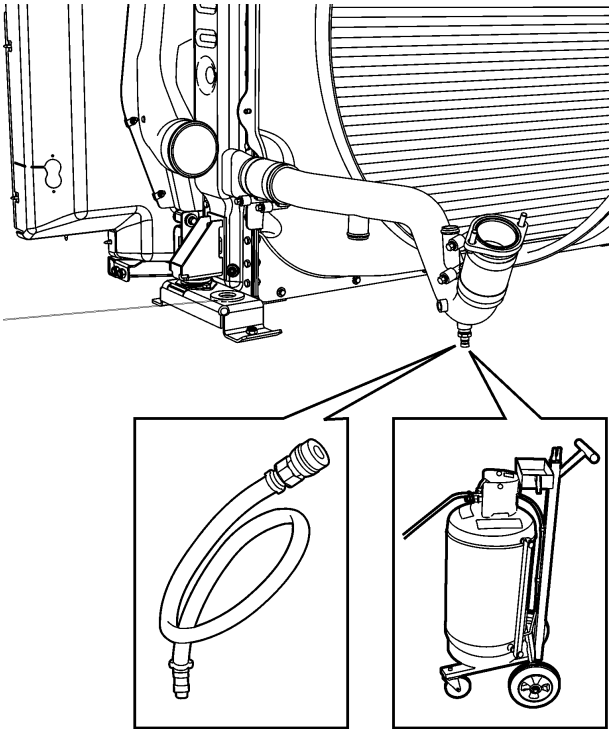

FIGURE 2

3. Unfasten two (2) cap screws and remove **access panel** located behind the tag axle L.H. side wheel.

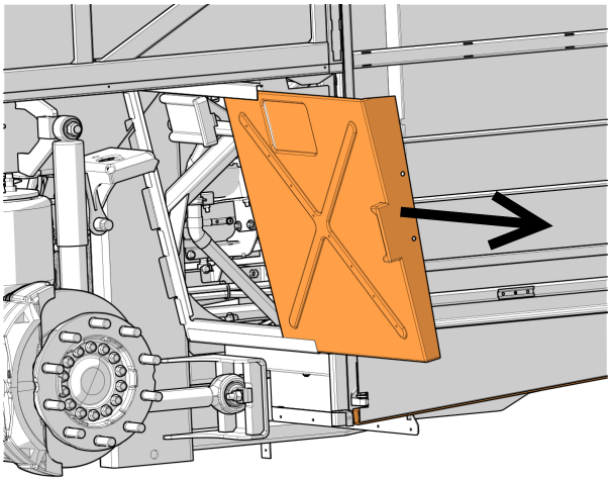

FIGURE 3

4. Open radiator door to access radiator assembly. Unfasten **upper arm assembly**.

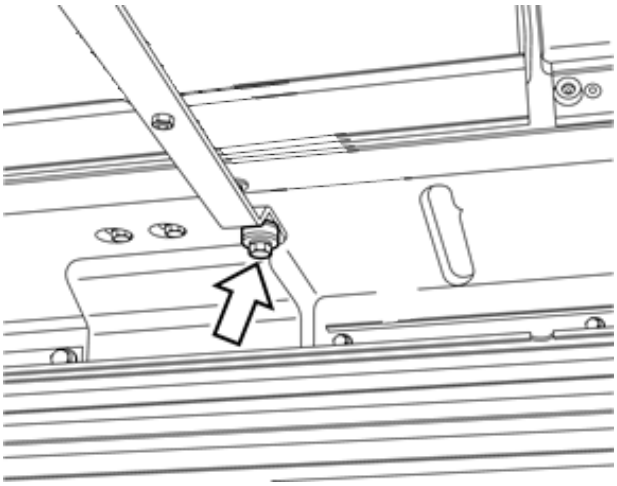

FIGURE 4

5. Remove radiator **sealing frame**.

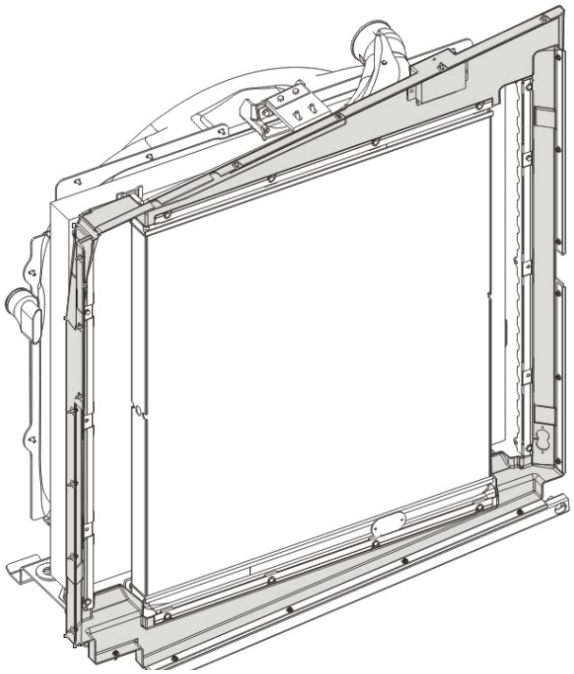

FIGURE 5

6. Remove the **rear bumper** (undo three nuts each side).

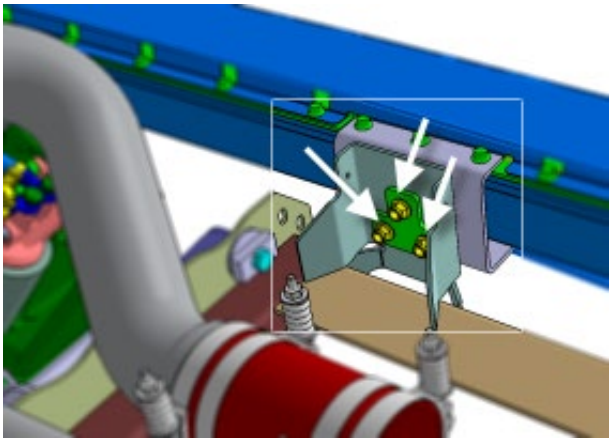

FIGURE 6

7. Remove the fan drive casting.

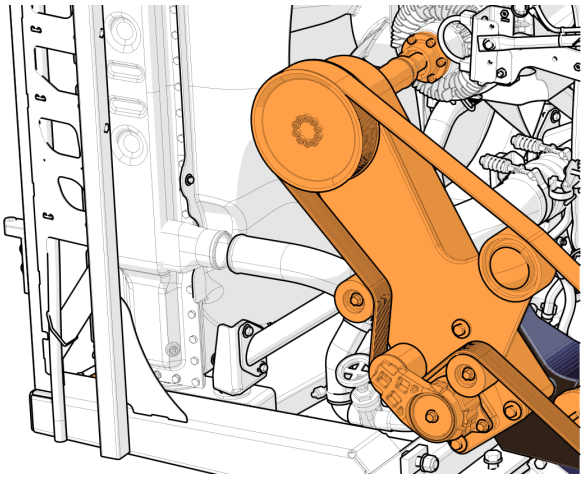

FIGURE 7

8. **Remove clamps** and then break hoses of the coolant and charge air pipes shown.

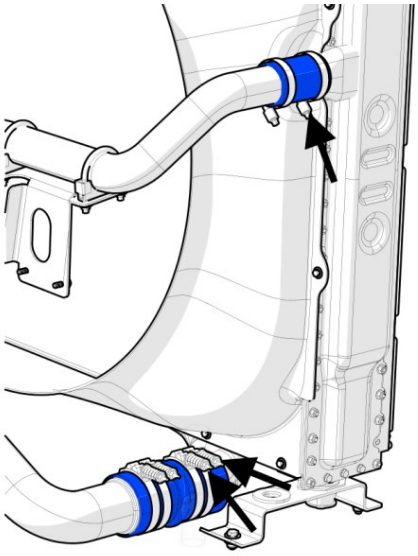

FIGURE 8

9. **Remove** the coolant and charge air hose **clamps** shown then break hoses loose.

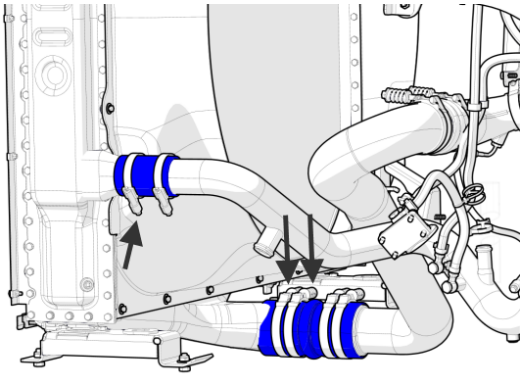

FIGURE 9

10. Remove the upper radiator assembly **support bracket**.

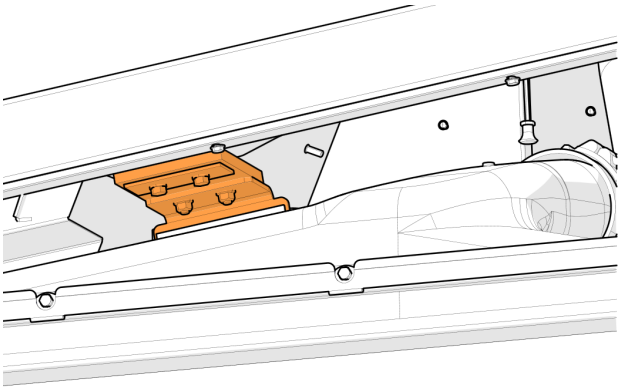

FIGURE 10

11. Remove the radiator assembly protector tube.

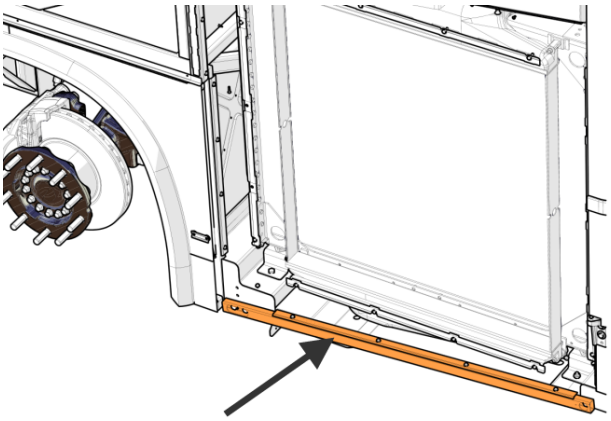

FIGURE 11

12. Disconnect the **radiator vent hose** on top of the radiator.

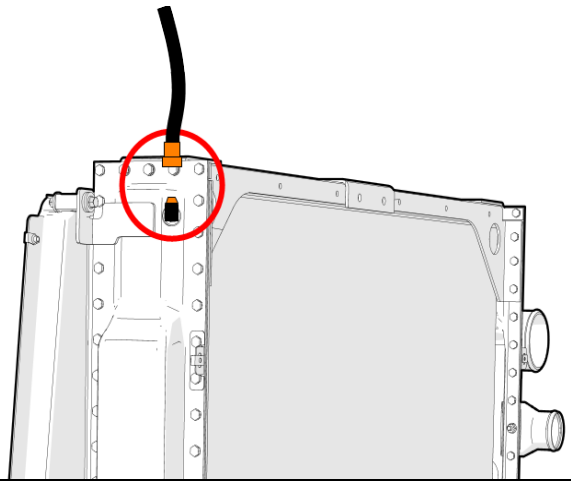

13. Disconnect the **electrical connector** from the fan clutch. The remaining connector on the chassis cable will be capped and left in place.

14. Remove fan **drive shaft** fasteners at the fan clutch.

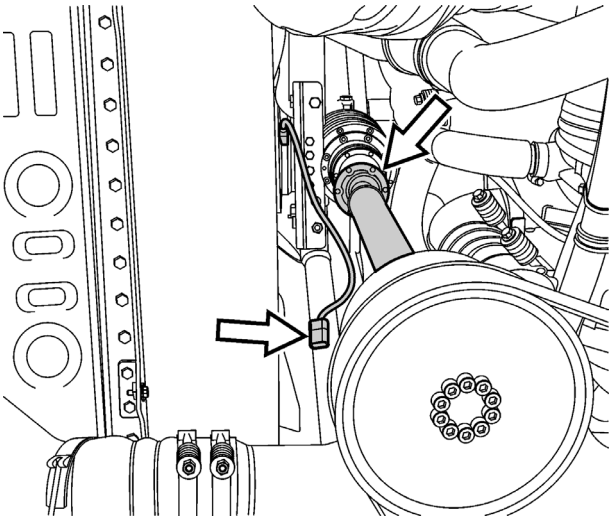

FIGURE 12

15. Open the secondary lock of **connector #561610**. Insert a **cavity plug #561783** in each of the four (4) cavities with the smallest end protruding as shown on the example at right. Close the secondary lock.

16. Cap the chassis fan clutch cable with this connector. Secure the connector on the existing harness:

    - ***nylon tie #504016 (1x)***

FIGURE 13

FIGURE 14

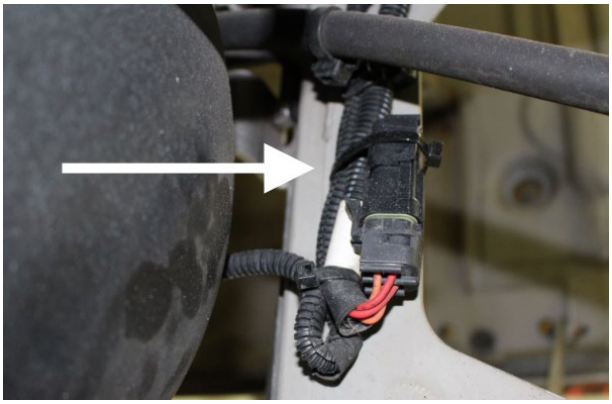

FIGURE 15

17. Unscrew all lower radiator assembly **mounting fasteners** (2 bolts on R.H. side, 2 bolts on L.H. side).

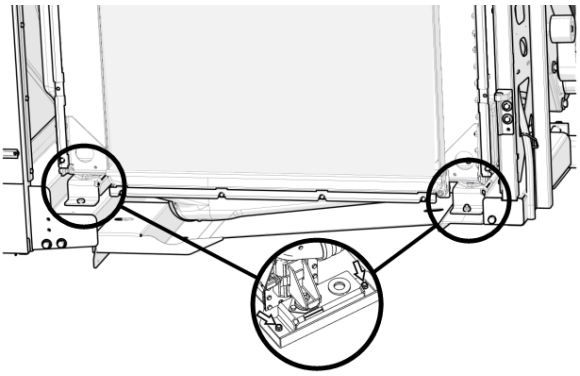

FIGURE 16

18. Position a **forklift** under the radiator assembly that is capable of safely lifting the radiator. With assistance, slide radiator assembly out and onto the forklift. Transfer radiator assembly to a secure location.

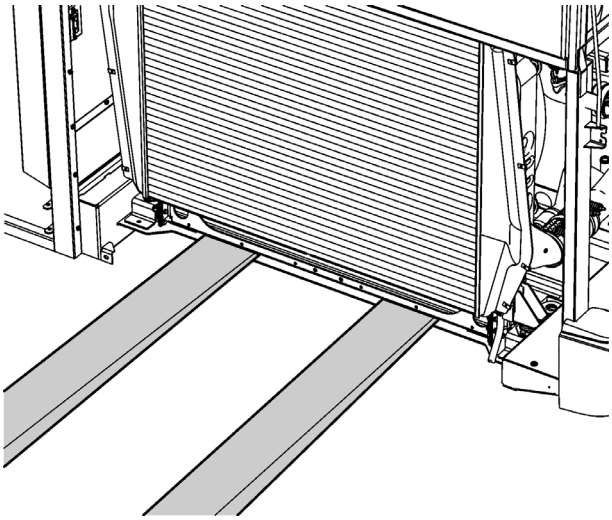

FIGURE 17

19. **Remove** the **tripod** from the radiator/CAC assembly.

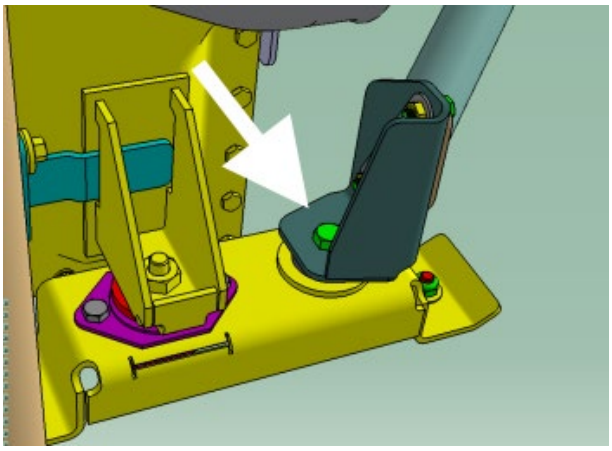

FIGURE 18

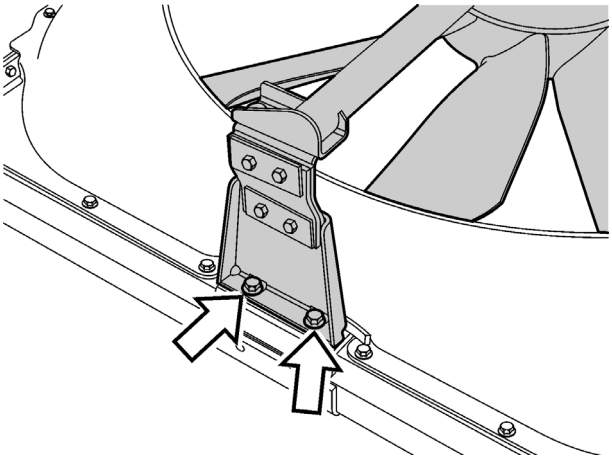

FIGURE 19

20. **Remove** the fan **shroud**.

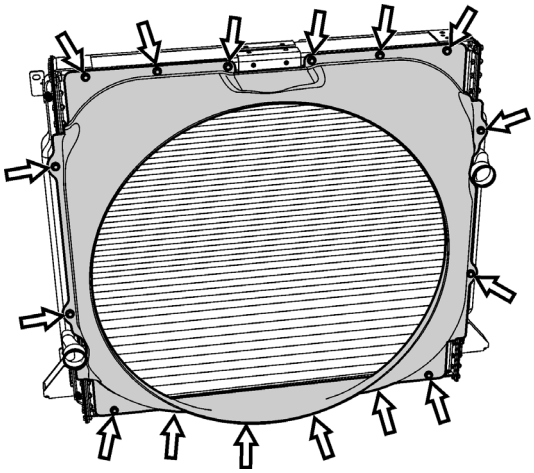

FIGURE 20

21. The new cooling pack arrangement requires being located **four inches** closer to the engine to give the needed clearance for the electric fans. For this reason, **rotate** both the radiator/CAC assembly **mounting support 180°** and reinstall.

BEFORE

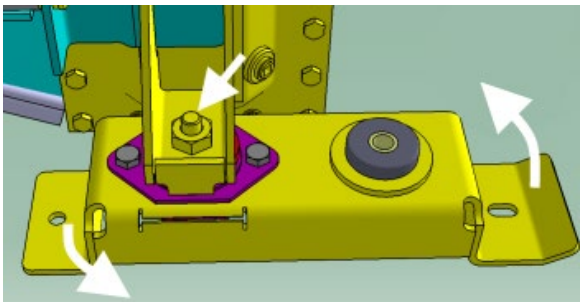

FIGURE 21: MOUNTING SUPPORT IN INITIAL POSITION

AFTER

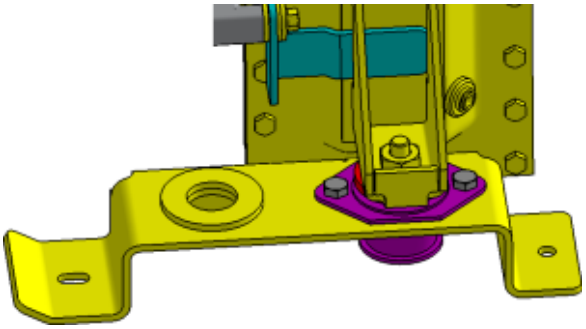

FIGURE 22: MOUNTING SUPPORT AFTER 180° ROTATION

22. Remove the exhaust pipe section located between the DPF and the flexible section.

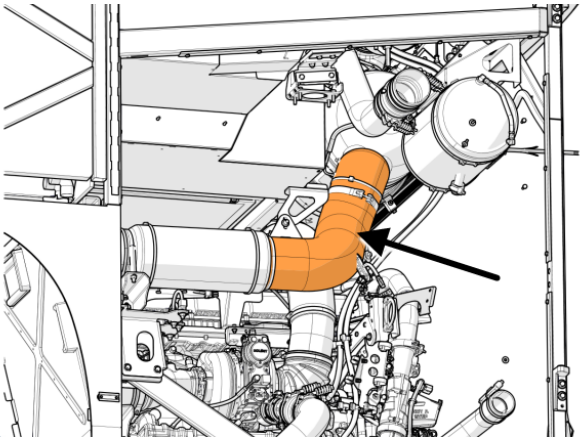

FIGURE 23: REMOVE THIS EXHAUST PIPE SECTION

23. On the engine hot side, remove the following pipes:
    - radiator outlet pipe
    - CAC inlet pipe

Keep the fittings found on the radiator outlet pipe for reuse

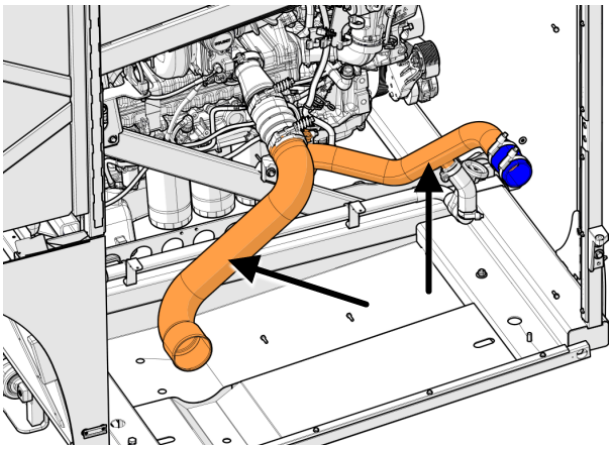

FIGURE 24

24. Undo the two (2) V-band clamps and then remove the engine intake elbow.

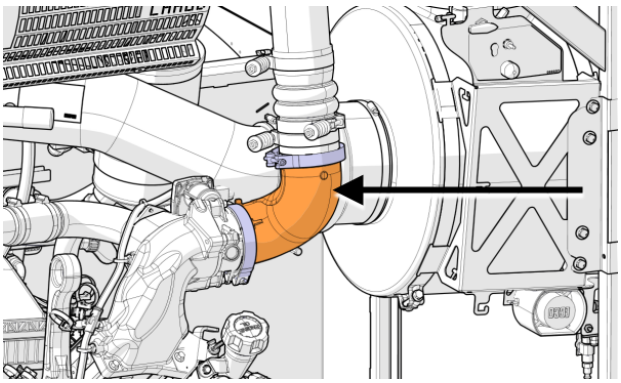

FIGURE 25: REMOVE THE INTAKE ELBOW

25. Remove the pipe (item A) section located downstream of the engine air filter. Prior to do so, disconnect the air compressor fresh-air inlet pipe (item B) connected to pipe A.

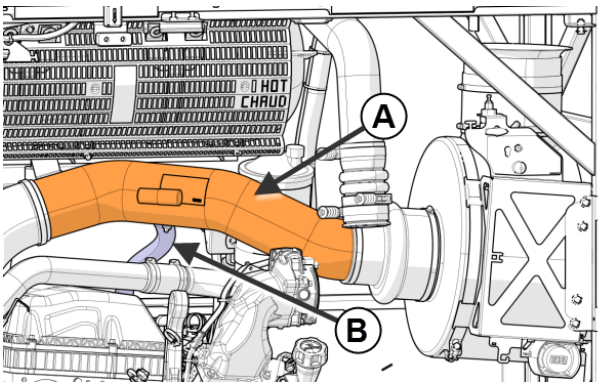

FIGURE 26

26. On the engine hot side, remove the radiator inlet pipe.

KEEP THE BLUE **HOSE**, IT WILL BE USED AS PROTECTIVE SHEATH

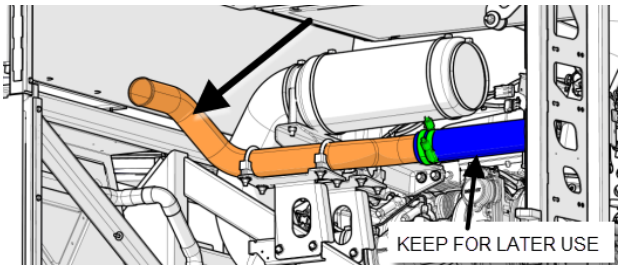

FIGURE 27

27. Remove and discard the CAC outlet pipe. It is possible to remove this pipe by taking it out from the left side (hot side)

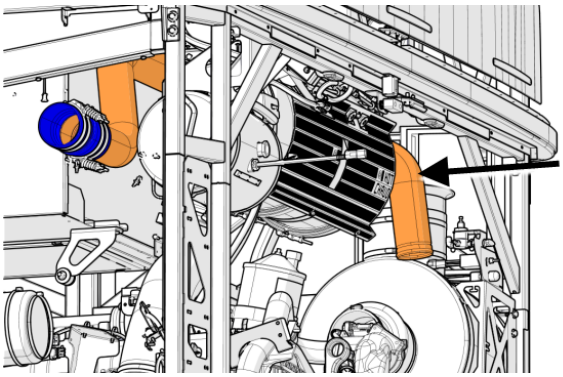

FIGURE 28

FIGURE 29

FIGURE 30

FIGURE 31

28. Replace the existing coolant surge tank support with the coolant tank support #053040 included in the kit. Use the existing hardware. Add one (1) new washer **#500321** and one (1) new nut #**5001983**.

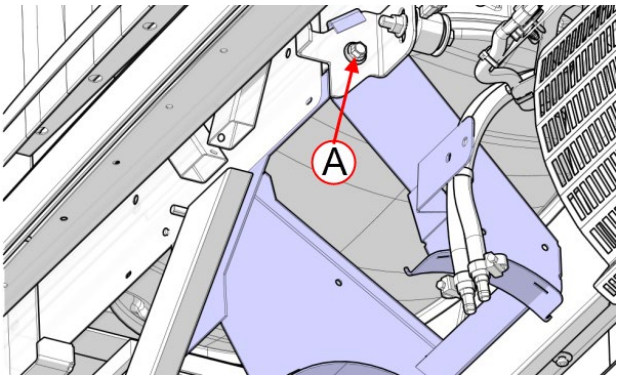

FIGURE 32

A: REUSE EXISTING HARDWARE

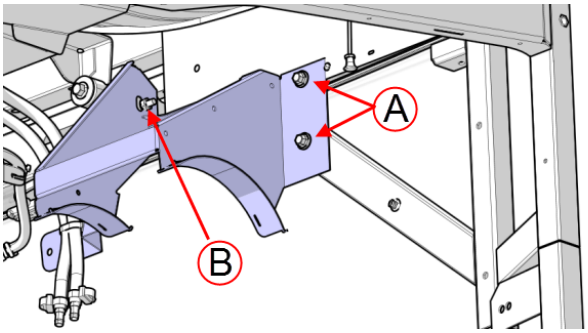

FIGURE 33

A: REUSE EXISTING HARDWARE

B: NEW WASHER #500321, NEW NUT #5001983.

29. Depending on the vehicle model year, drilling of the mounting hole shown might be necessary (see image at right).

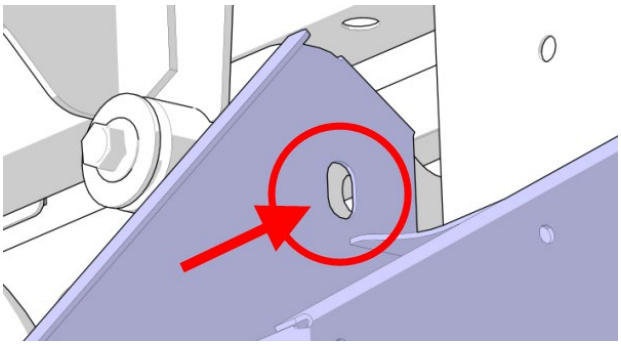

FIGURE 34

30. Reinstall the surge tank, slightly moved to the right in comparison with the former installation.

Note the T-bolt band clamp now located on the other side of the filler neck on the image at tight.

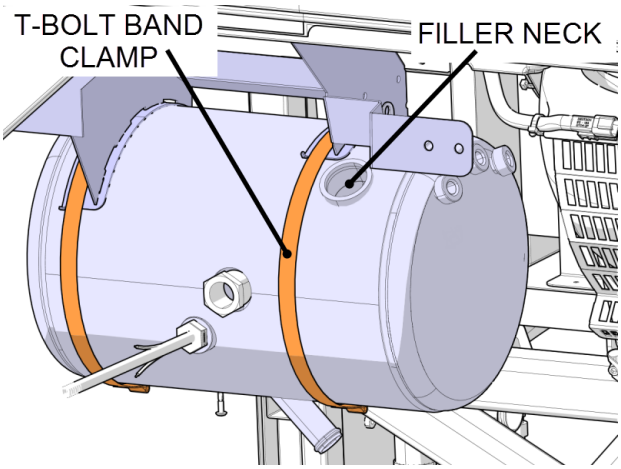

FIGURE 35

31. The area identified on the images at right will be in interference with the radiator. For this reason, some modifications are necessary to eliminate the interference.

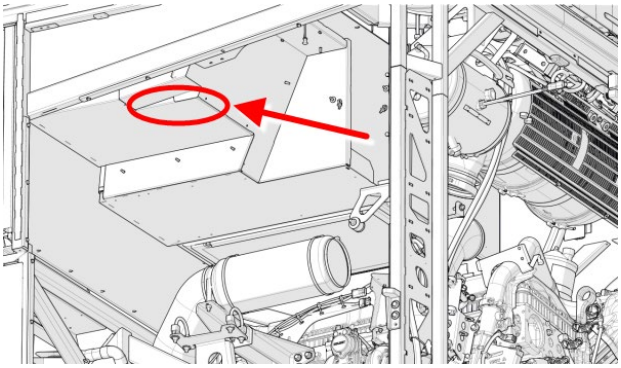

FIGURE 36

32. Cut the sheet metal along the red lines as shown on the image at right.

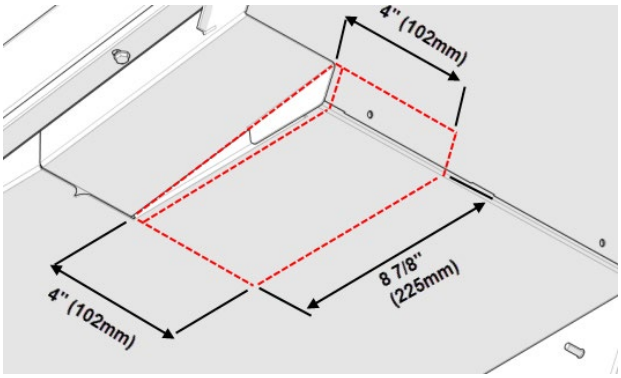

FIGURE 37

FIGURE 38

33. Cut along the red line shown on the picture to separate the sheet metal from the steel fold.

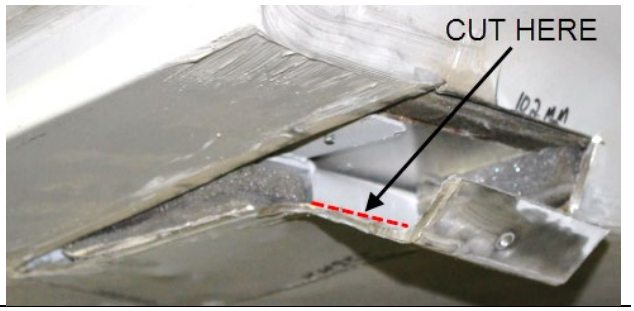

34. The bolt seen on the picture at right secures the last R.H.seat. This bolt is too long and must be changed for a shorter one.

FIGURE 39

35. Unscrew the bolt identified on the picture and change it for screw #**500594.**

FIGURE 40

36. Cut the steel fold shown on the picture at right.

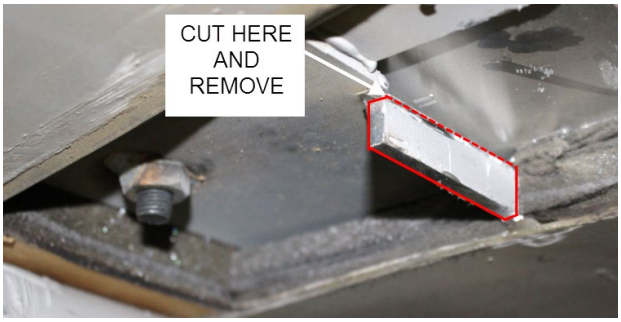

FIGURE 41

37. Fold over the sheet metal as shown in the picture and secure to the structure using the following hardware:
    - ***rivet #504117 (5x)***
38. Finally, apply sealant to assure water tightness.

FIGURE 42

39. Remove all the drive belts mounted on the crank pulley.

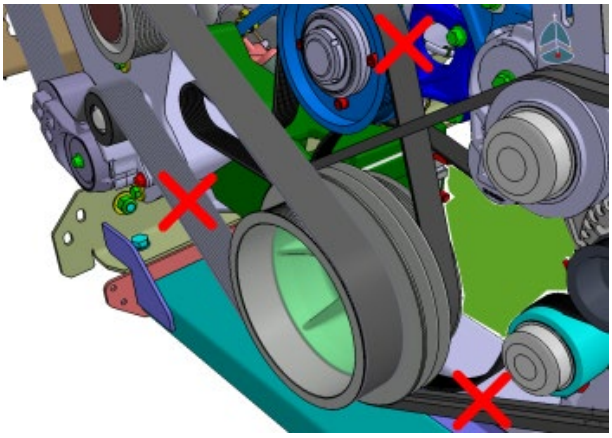

FIGURE 43

40. Remove the crank pulley. Discard the 6 bolts.

NOTE: On vehicles prior to serial G-5986 (2016) equipped with a trailer hitch, <u>keep the existing crank pulley (14 ribs)</u> in place.

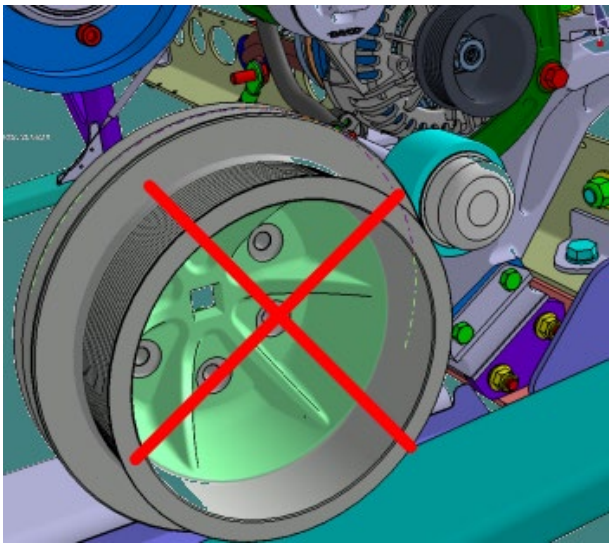

FIGURE 44

41. Remove the rust, clean and prepare the surface on the vibration damper as shown. Work the surface to achieve a smooth finish.

FIGURE 45

FIGURE 46

42. Properly support the engine as one of the engine support will be interchanged in the upcoming steps.

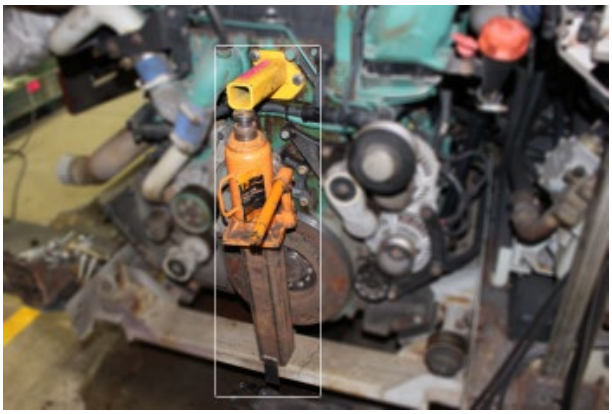

FIGURE 47

43. Remove the two (2) coolant hoses shown on the image. Keep the two (2) banjo fittings for later use.

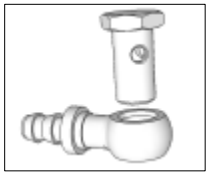

BANJO FITTING

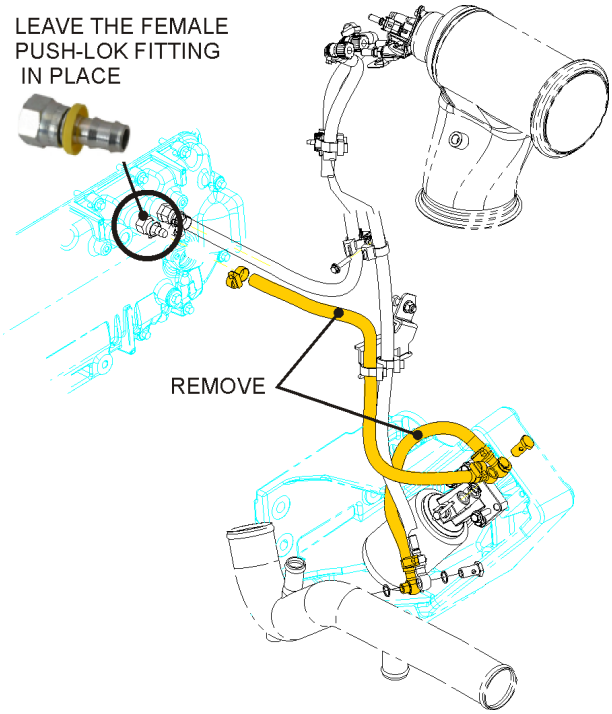

FIGURE 48

44. Remove the L.H. rear engine support (10 bolts). Keep the hardware for reinstallation.

Take note that the water pump belt idler/tensioner assembly will be reused as is. Do not take apart tensioner or idler.

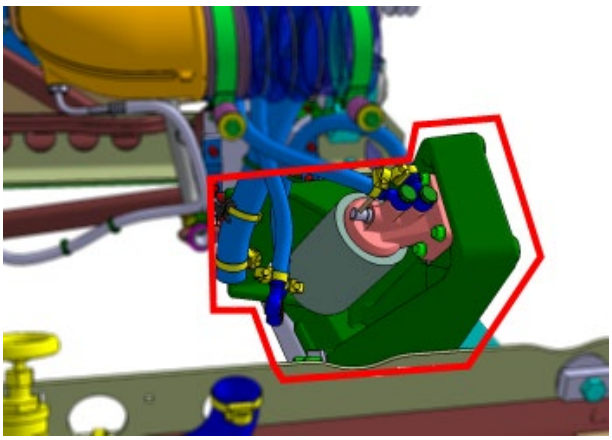

FIGURE 49: L.H. REAR ENGINE SUPPORT

45. Cut the engine cradle rail as shown to increase the clearance between the cradle and the alternator. Carefully work the edge to achieve a smooth finish and contour.

Wear appropriate personal protection equipment.

Protect engine and area with blankets.

Blow area clean when completed.

Apply paint to protect the bare metal

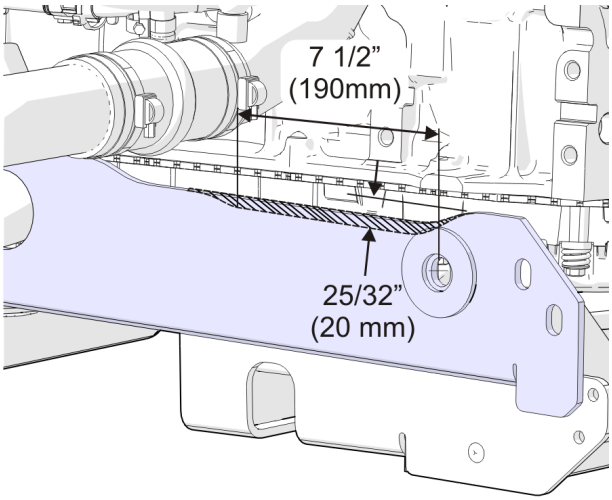

FIGURE 50

46. Remove the water pump idler/tensioner assembly from the former engine mount. To do so, unscrew three (3) bolts at the back of the engine mount.

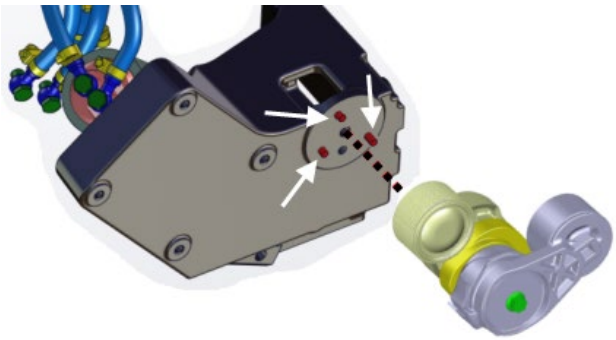

FIGURE 51

47. Reinstall the idler/tensioner assembly as a unit on the new L.H. engine mount #010090.

    Mount the idler/tensioner assembly using three (3) cap screws #5001643

Tighten to 14-17 lb-ft

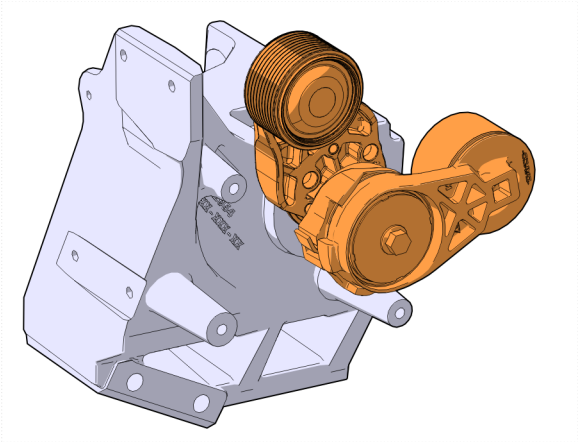

FIGURE 52

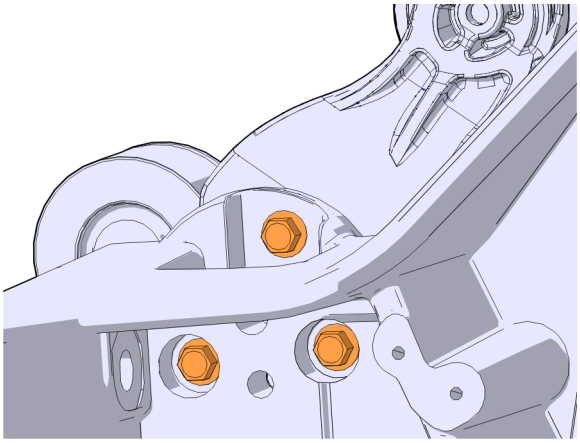

FIGURE 53

48. Install the new engine mount #010090 using seven (7) M14 screws saved from the former engine support.

Use blue Loctite 243 on the bolt threads

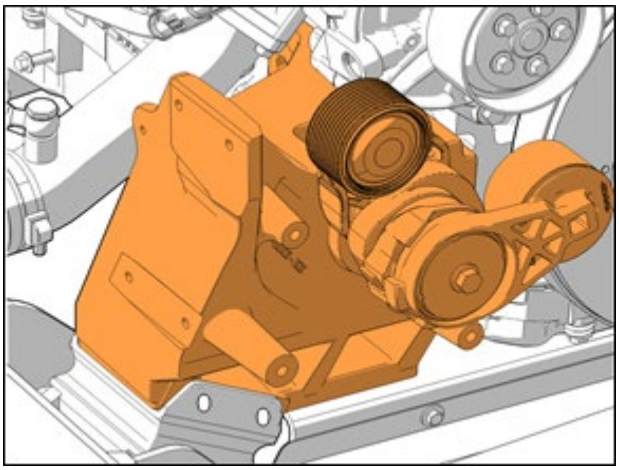

FIGURE 54

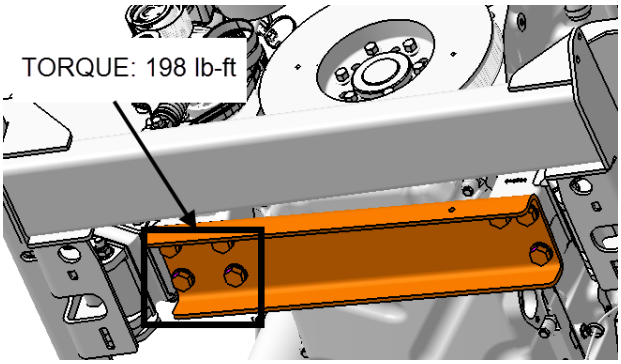

FIGURE 55: FOUR (4) SCREWS UNDER THE REINFORCEMENT CHANNEL

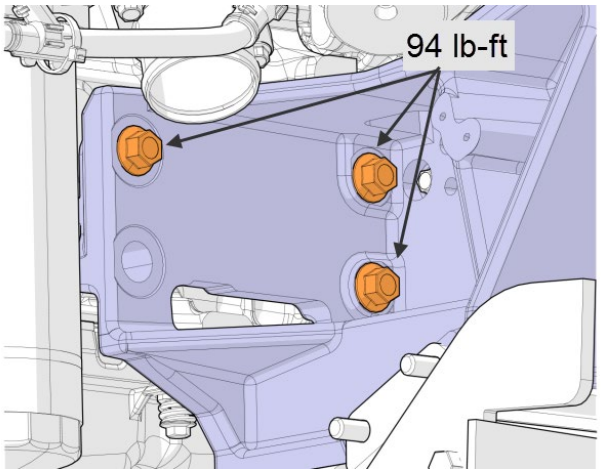

FIGURE 56: THREE (3) SCREWS ON THE SIDE OF THE ENGINE MOUNT

49. Install the ground stud. Use the following hardware:

- ground stud #012921 (1x) and
- nylon insert NYRT nut #5001665 (1X)

Use blue Loctite 243 on the bolt threads

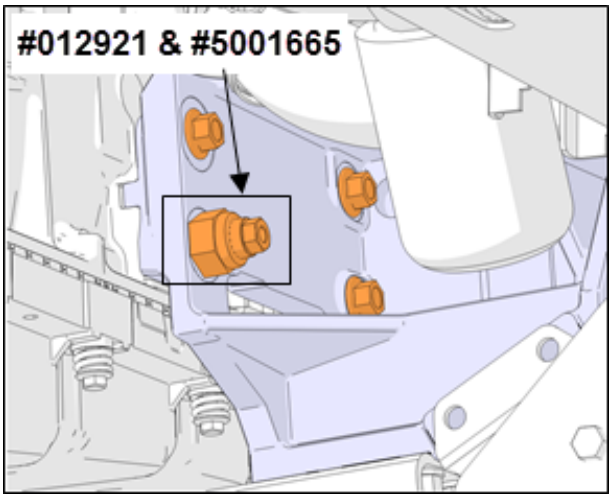

FIGURE 57

Tighten ground stud to 94 lb-ft

Tighten NYRT nut to 94 lb-ft

50. Install new isolator screws. Use the following hardware:

- Isolator screw #5001940 (2X)
- Nut #5001761 (2X). Place the nuts to the opposite of the side seen on the image.

Use blue Loctite 243 on the bolt threads

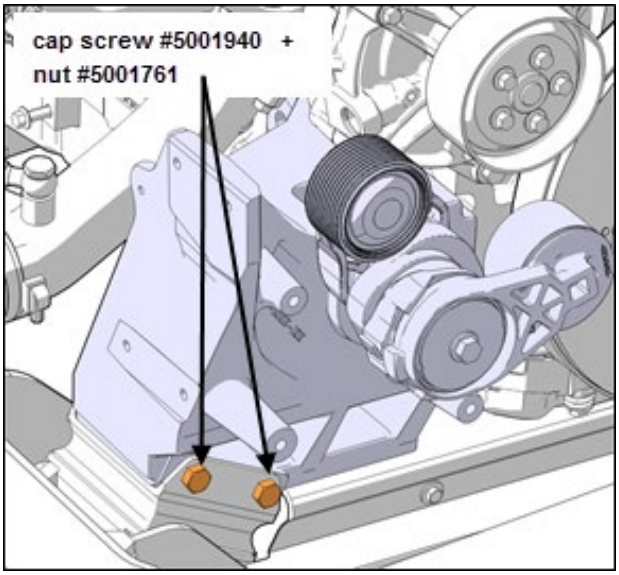

FIGURE 58

Tighten isolator screws to 60 lb-ft

51. Install the new crank pulley using six new bolts #5001296. Use blue Loctite on the bolt threads.

    Torque to 26 lb-ft in this numerical order: 1, 2, 3, 4, 5, 6, 1

    Once done perform a final tightening to the value of 66 lbf-ft.

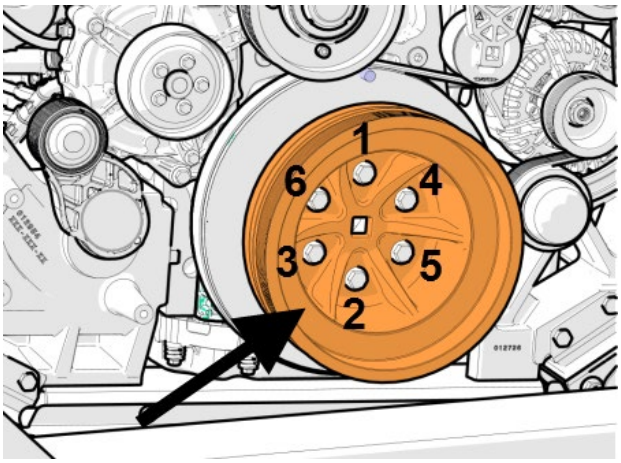

FIGURE 59

52. Reinstall the water pump drive belt.

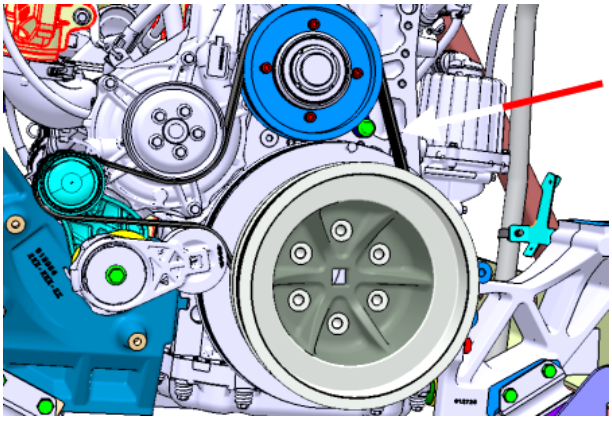

FIGURE 60: WATER PUMP DRIVE BELT

53. Reinstall the A/C compressor drive belts.

54. Install **alternator brackets #069890 and #069891**.

    Note: Install the upper bracket #069891 with the short end towards bumper and long end towards the turbo.

    Use:

    4x cap screws #5001308

    Apply blue Loctite

    Tighten to **48 lb-ft**

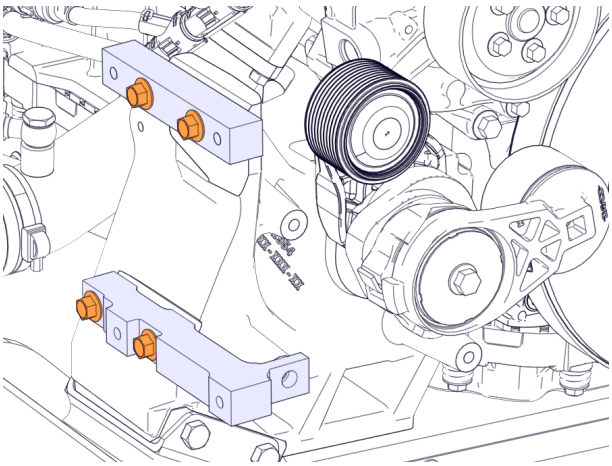

FIGURE 61

55. Installing the LH alternator pulley. Place #560720 alternator flat on a bench with the shaft horizontal.

    Required tools:

    - 15/16” crowfoot adapter
    - 8 mm hex bit

    Clean shaft and pulley with brake cleaner.

    Slide pulley #**069893** on the shaft by hand.

    Hand thread nut on the shaft until snug.

    Using thin wall15/16”adapter and 8 mm hex bit to block shaft rotation, tighten to **70-80 lbf-ft**.

    Never use power tools to install pulley and nut.

    Note: *Do not apply any pressure to end of the shaft. Internal damage may occur if the shaft is pushed back and turned***.**

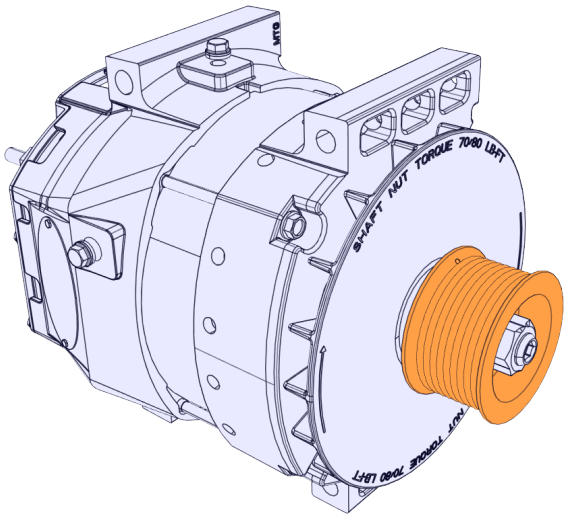

FIGURE 62

56. Install alternator on support with four (4) #5002091 M10x120 screws.

    Apply blue Loctite

    Tighten to 48 lb-ft

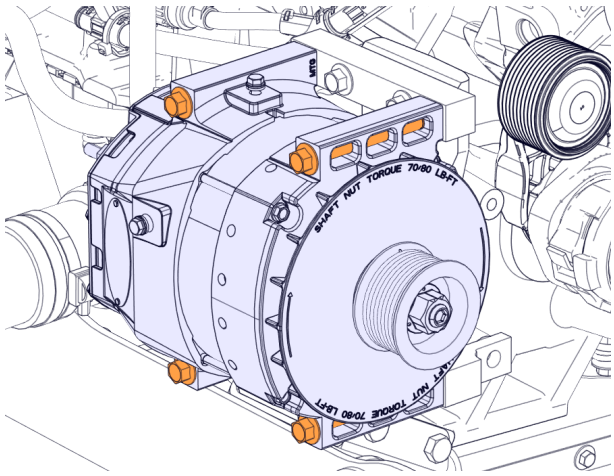

FIGURE 63

57. Install the idler support #011213 using:

    3x screws #5001799

    Tighten to 48 lb-ft

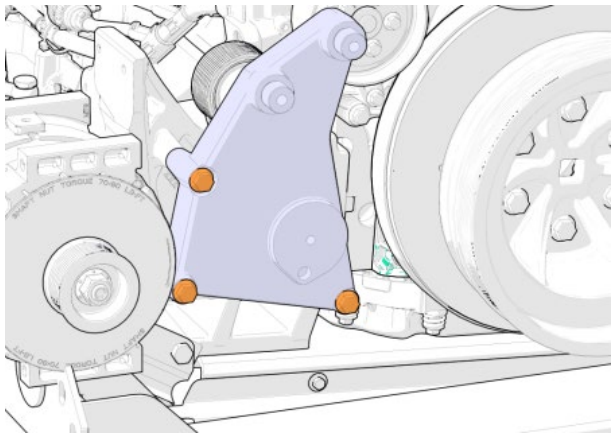

FIGURE 64

58. Install the new **idler #012349** with one screw (1) #5001786 and one (1) washer #5002008.

Tighten to 59 lb-ft

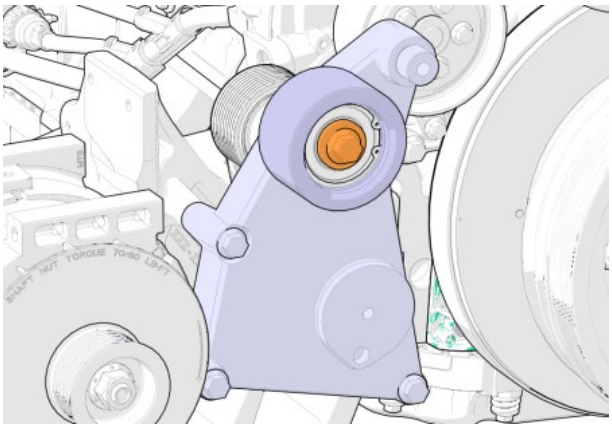

FIGURE 65

59. Install the dust cap #453076.

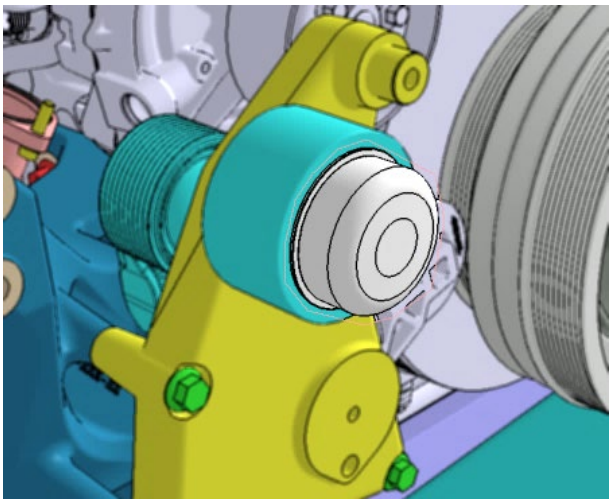

FIGURE 66

FIGURE 67

60. Install the new alternator tensioner #510991. Secure with one (1) **screw #5001799** on which blue Loctite is applied.

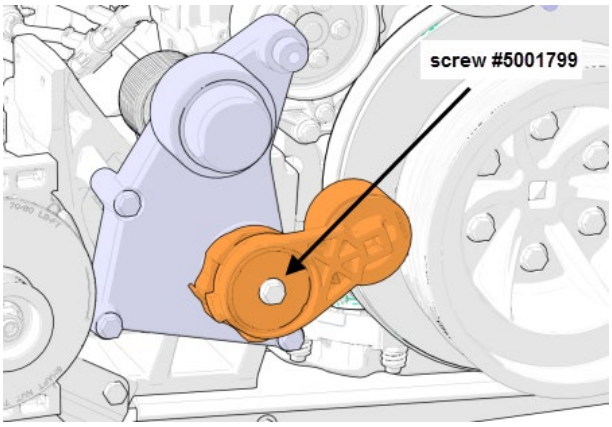

FIGURE 68: TENSIONER MOUNTING SCREW TORQUE : 48 LB-FT

61. Install **belt #506067**. To do so, rotate the automatic belt tensioner using a ½ square drive breaker bar.

NOTE: Use belt #506080 instead if the original crank pulley is still in place (vehicle equipped with a trailer hitch).

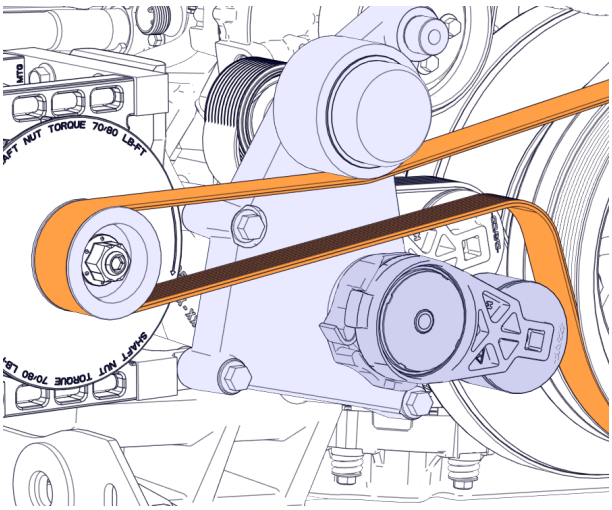

FIGURE 69

62. Remove former belt routing decal and replace with **decal #010111**.

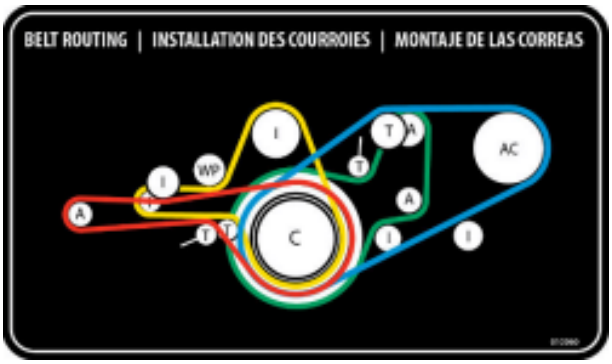

FIGURE 70

63. Perform the “Multiplex Modules Disconnection Procedure Prior to Welding” found in your vehicle Maintenance Manual, Section 00: General.

64. Weld the new coolant filter support #050265 on the engine cradle.

23 1/2 inches (597 mm) from the end of the cradle

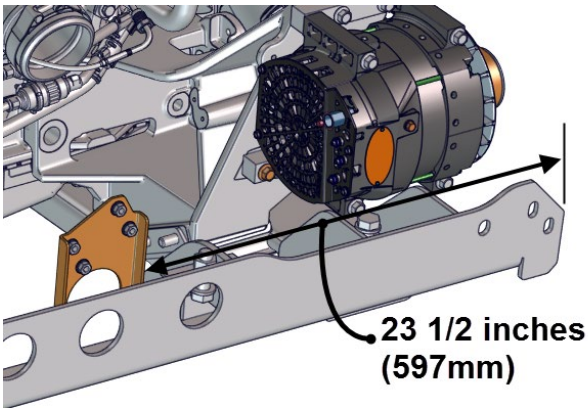

FIGURE 71

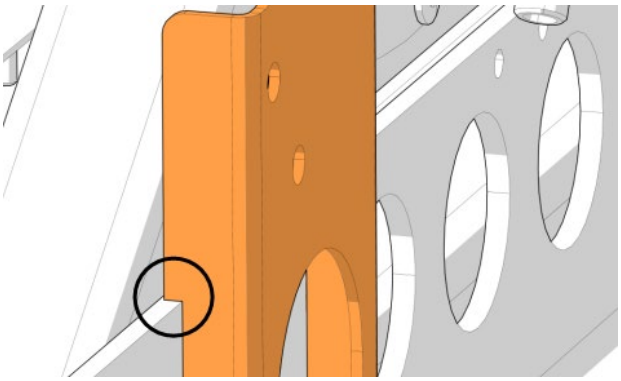

FIGURE 72

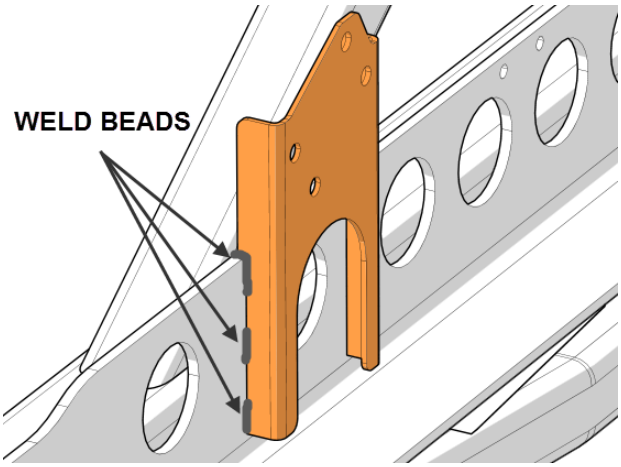

FIGURE 73

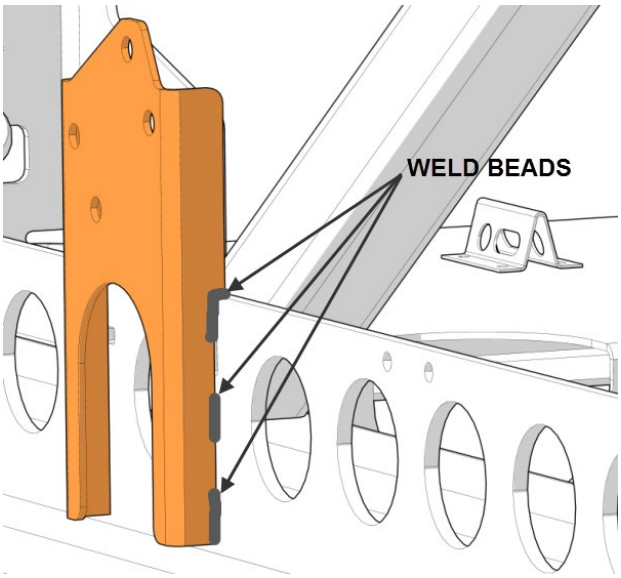

FIGURE 74

65. As a preparation for **welding**, use a grinder with abrasive disc to remove some paint to reach bare metal. Weld the **ground stud** #380360 centered on the beam, 16 inches (406 mm) from the vertical member beam end.

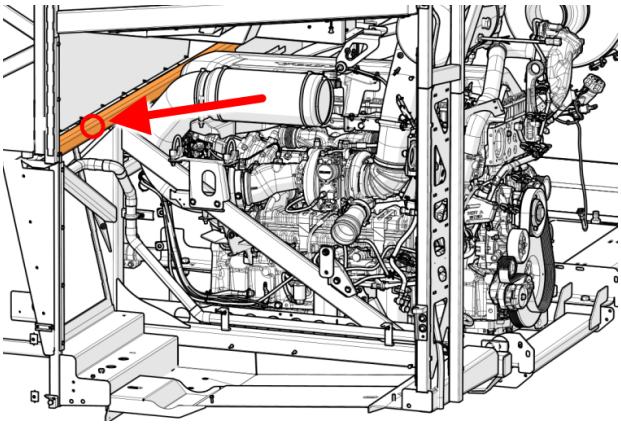

FIGURE 75

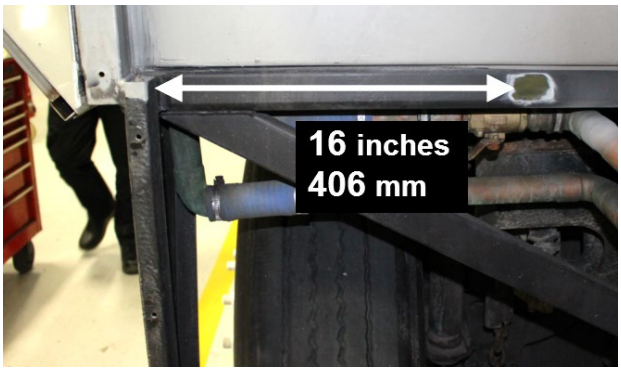

FIGURE 76

FIGURE 77: GROUND STUD #380360

66. Apply black paint to the area surrounding the ground stud and the ground stud circular base. **DO NOT** apply paint on the electrical contact surfaces.

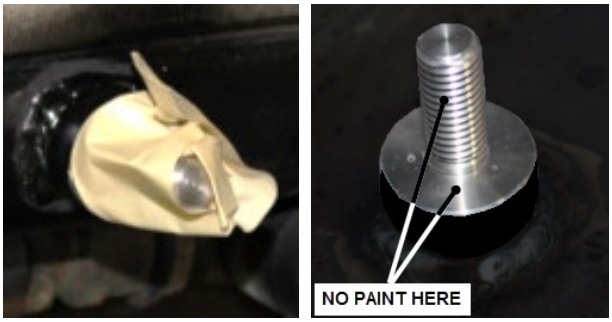

FIGURE 78: GROUND STUD #380360

67. Install a tie mount #509490 with one screw #502686 at the back of the L.H. engine mount.

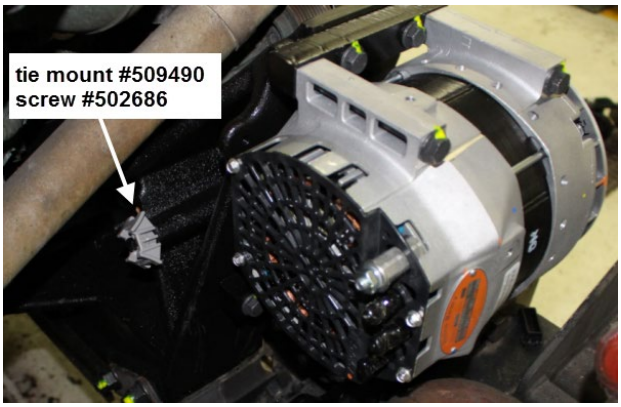

FIGURE 79

68. Install the alternator ground cable #0610035. Use the ground screw and lock washer supplied with alternator **with the addition of a flat washer #500411**.

torque: 50-60 lbf-in

69. Secure the alternator ground cable to the previously installed tie mount using one (1) nylon tie #509491.

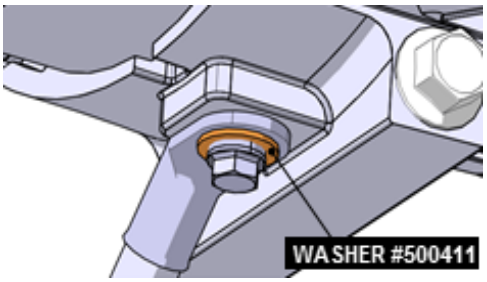

FIGURE 80

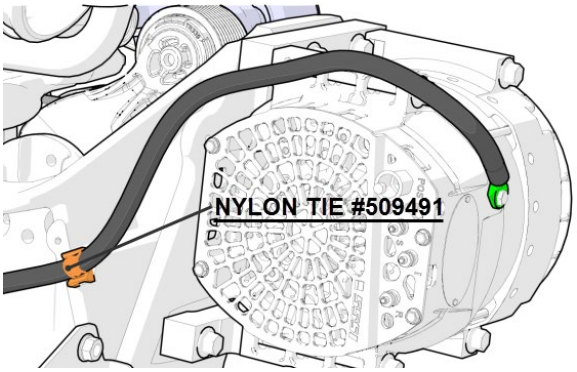

FIGURE 81

70. Secure the alternator ground cable to the previously installed ground stud on the L.H. engine mount.

    Use screw #502719 & washer #5001935

    Tighten to 20 lbf-ft

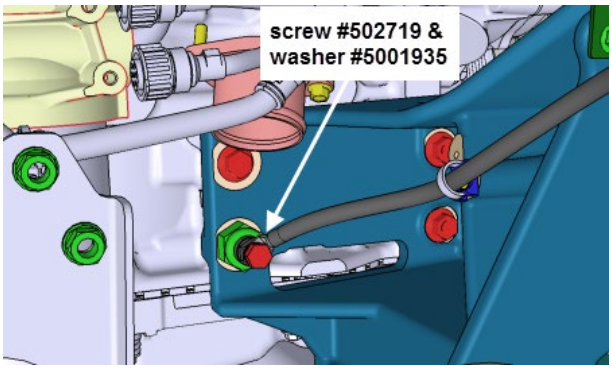

FIGURE 82

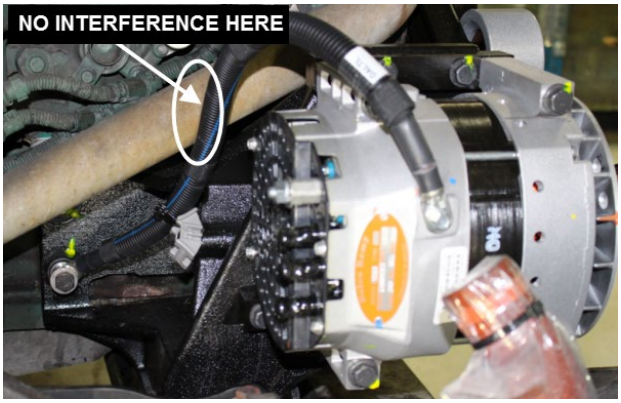

FIGURE 83

71. Protection against corrosion. <u>Apply Color Guard rubber coating</u> on the alternator ground screw and the ground stud once the ground cable is hooked up.

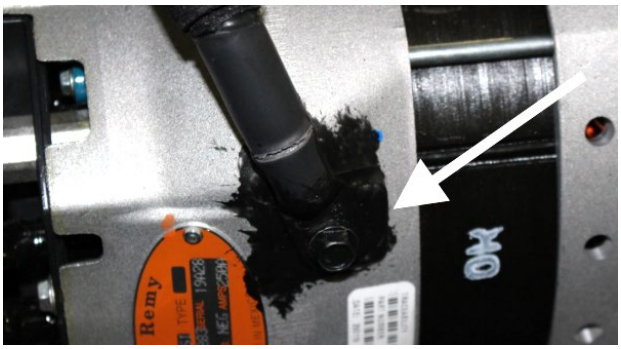

FIGURE 84

FIGURE 85

72. To the previously installed coolant filter support, install the filter holder recovered from the former installation.

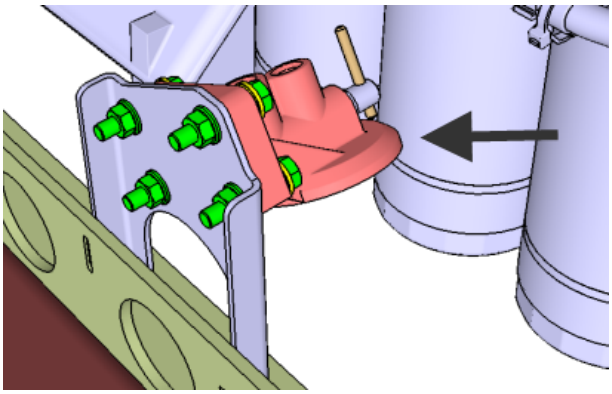

FIGURE 86

73. Install a new coolant filter 21937327onto the filter holder. Check the clearance between the filter and the near-hose clamps of the coolant pipe leading to the transmission oil cooler.

74. Transfer the drain plug and the coolant extractor quick connect fitting saved from the old radiator outlet pipe.

Apply Loctite 567 Thread Sealant prior installation of the fittings

75. Install the new radiator outlet pipe #050331. Reinstall with the flexible hose #053617 and four (4) hose clamps #992089. Use steel wire to hold the end of the pipe until the radiator is installed if required.

A: # 992089 hose clamp (4x); torque: 30 lbf-in

B: drain plug

C: coolant extractor quick connect valve

D: # 053617 silicone hose

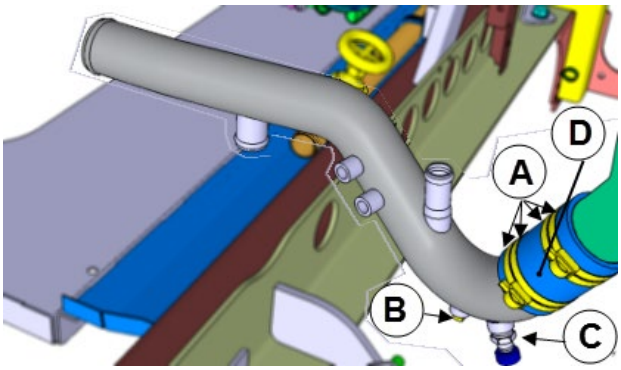

FIGURE 87

76. Connect the elbow between the copper heater line and the new radiator outlet pipe.

A: #992086 hose clamp (1x)

For proper clamp torque, refer to HOSE CLAMP TORQUE on page 12.

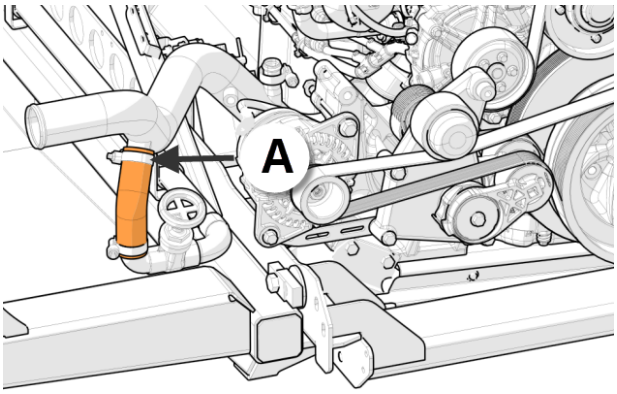

FIGURE 88

77. Using blue flexible hose #052366, prepare two new short hoses for the coolant filter.

a) Cut two sections of blue flexible hose, one **13 inches** long and a second one, **27 inches** long.

b) Use the banjo fittings **recovered** from the previous installation.

A : hose clamp #992081 (4x)

B: banjo fitting copper washer #507657 (6x)

hose clamp torque: 30 lbf-in

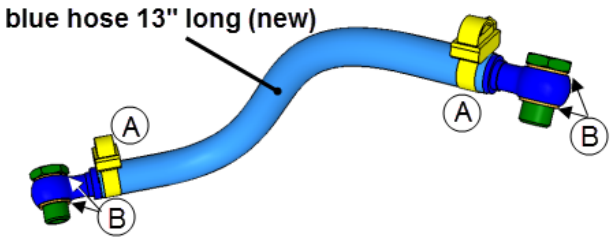

FIGURE 89

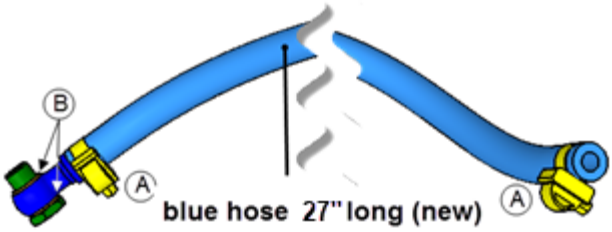

FIGURE 90

78. Install the 13″ and 27″ long hoses prepared at the previous step as shown on the images.

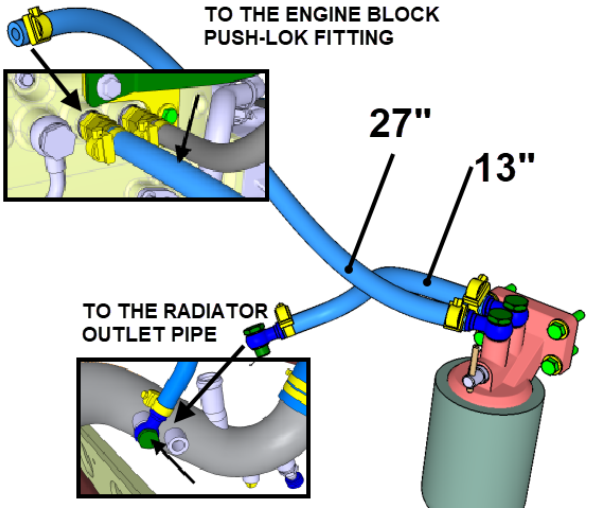

FIGURE 91

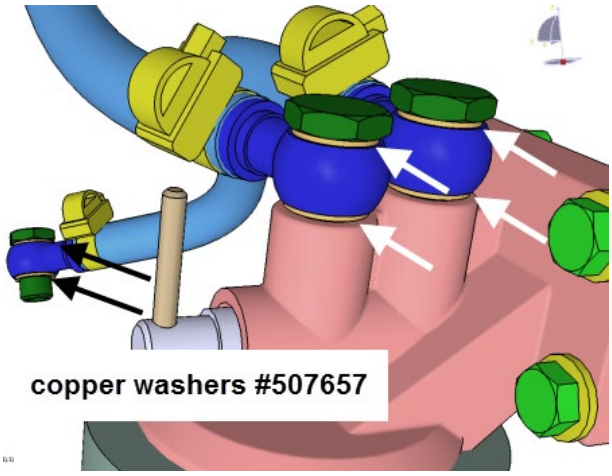

FIGURE 92

79. Secure the 24″ long hose as shown on the image.

A : nylon tie # 509491

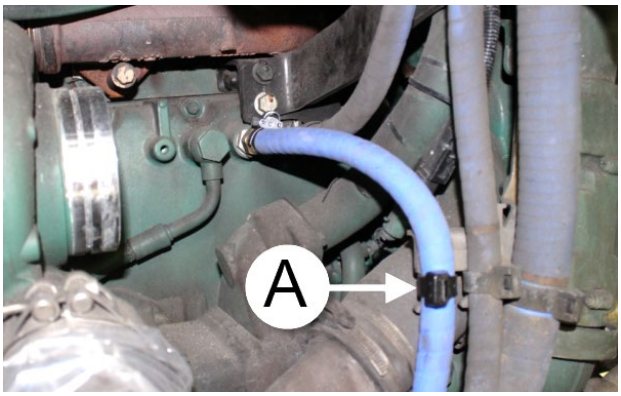

FIGURE 93

80. Connect the DEF injector coolant line return hose to the radiator outlet pipe.

Use two (2) new banjo fitting copper washer #507657

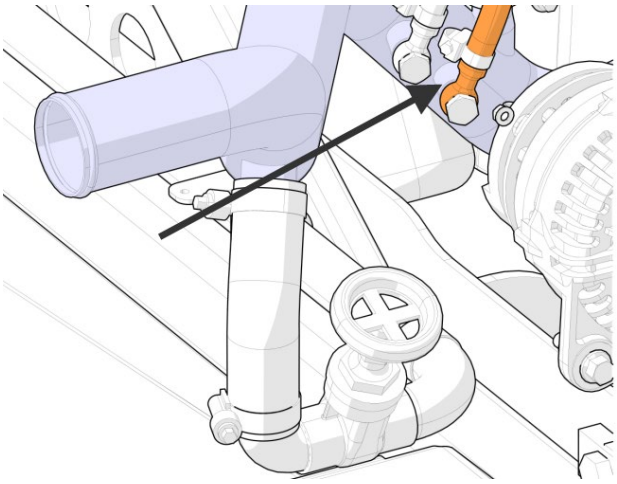

FIGURE 94: DEF INJECTOR COOLANT LINE RETURN HOSE

81. Connect the coolant line that comes from the surge tank to the radiator outlet pipe. Use one (1) hose clamp #992086.

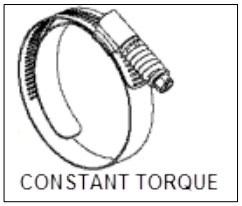

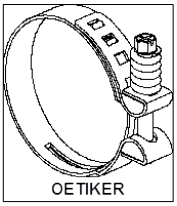

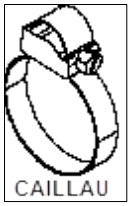

TORQUES:

Caillau clamps : 30 lbf-in

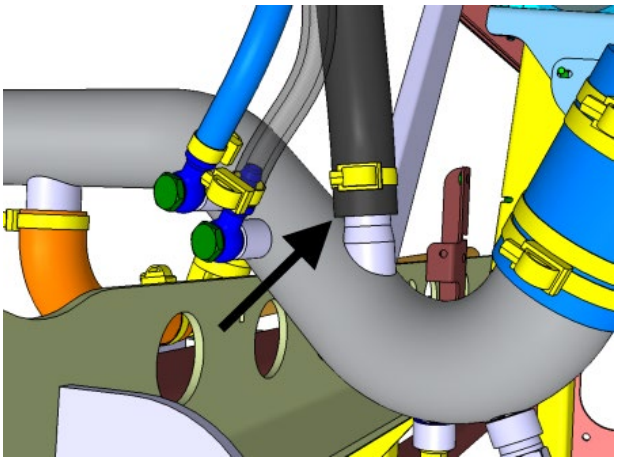

FIGURE 95

82. Secure the coolant hoses together using the following hardware.

A : nylon tie # 509491 (2x)

B:swivel mount #504751 (1x)

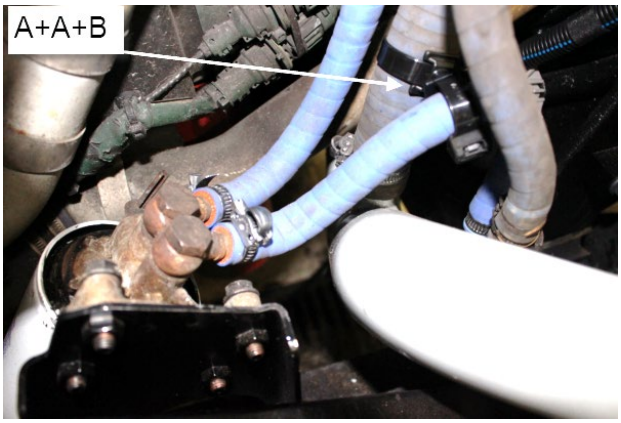

FIGURE 96

83. Secure the coolant hoses together using nylon ties.

A: « handcuff » nylon tie #N37749 (2x)

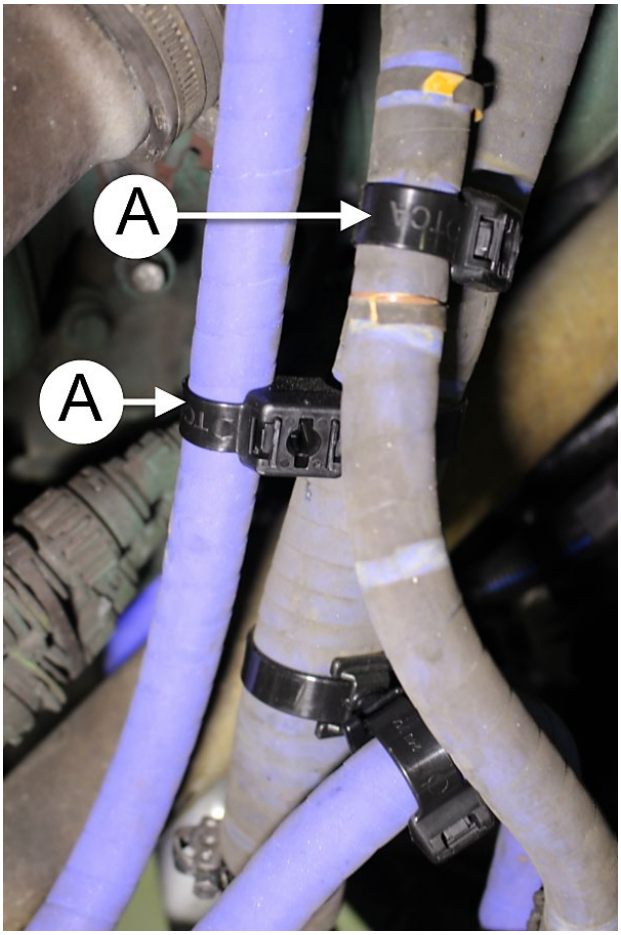

FIGURE 97

84. Hang the engine intake pipe #050308 in place.

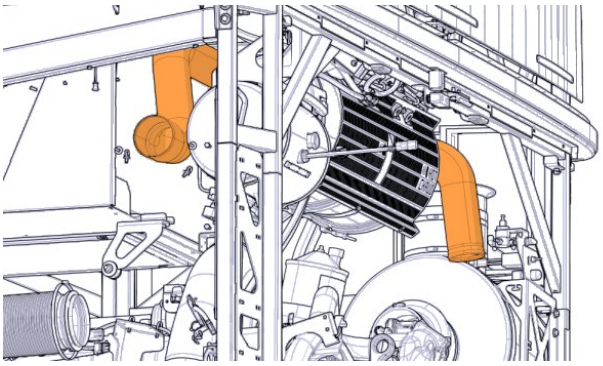

FIGURE 98

FIGURE 99: ENGINE INTAKE PIPE SUPPORT

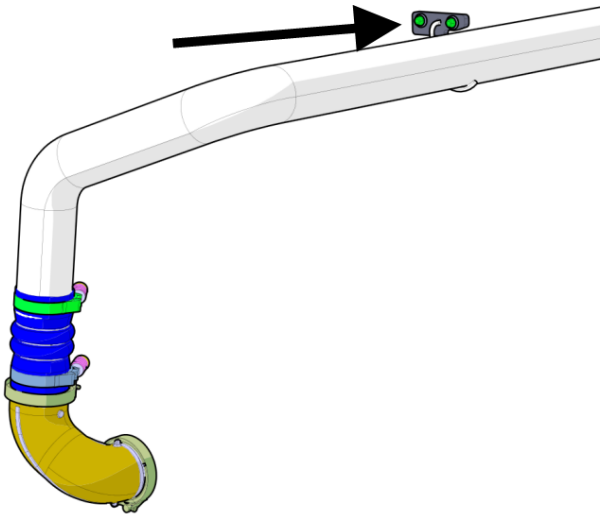

FIGURE 100: PIPE SUPPORT

85. Reinstall the intake elbow and adapter. Use the following hardware:

A: V-band clamp #20592783 (2x)

B: Gasket #1675066 (2x)

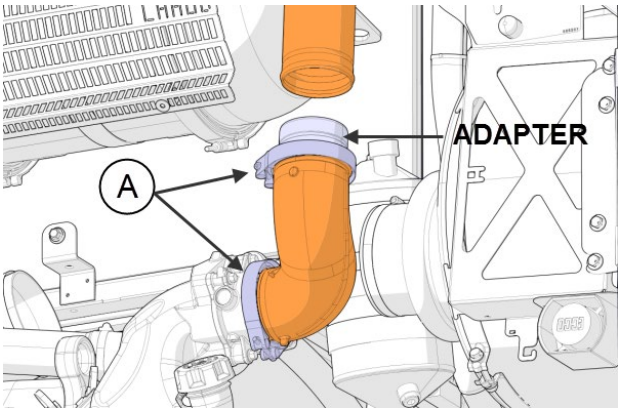

FIGURE 101: ENGINE INTAKE PIPE SUPPORT

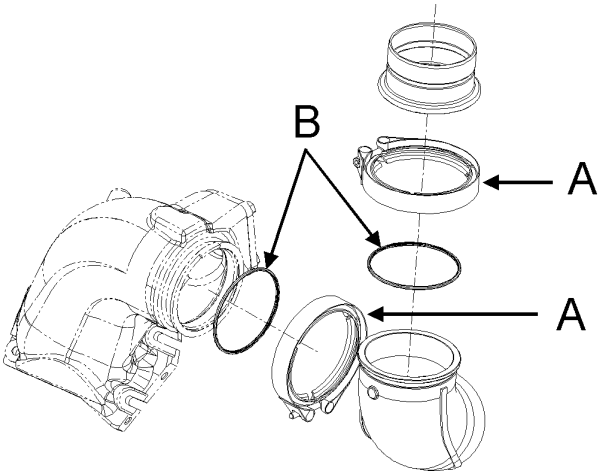

FIGURE 102

86. Connect the new CAC outlet pipe #050308 to the engine intake elbow.

A: #030096 hose (1x)

B: #21490630 spring loaded clamp (2X)

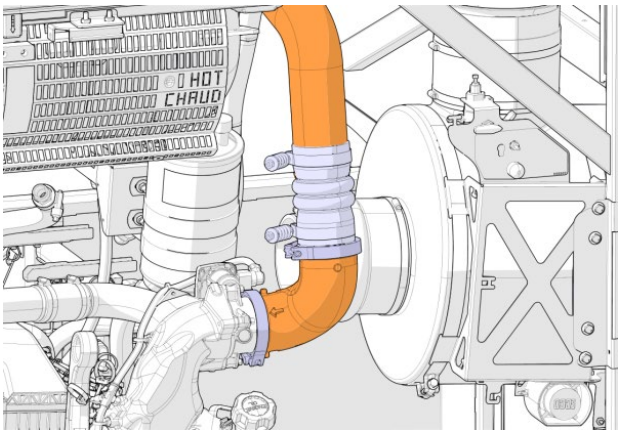

FIGURE 103

Constant Torque hose clamps 4.25"- charge air cooler (CAC) 4.5-5.5 lbf-ft

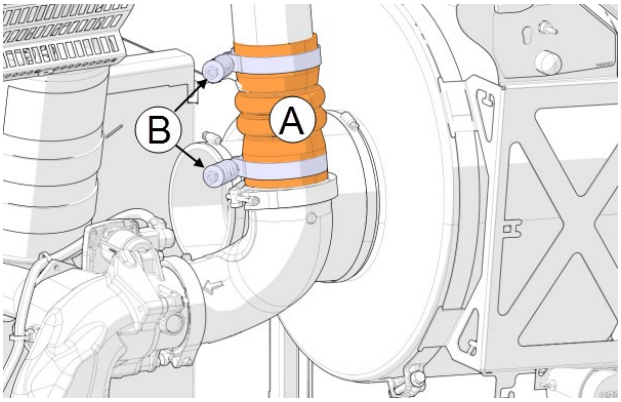

FIGURE 104: CONNECTION AT THE ENGINE INTAKE ELBOW

87. Reinstall the pipe (item A) section located downstream the engine air filter. Connect the air compressor fresh-air inlet pipe (item B) connected to pipe A.

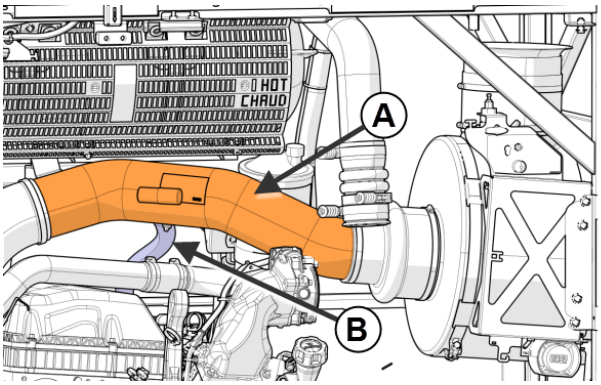

FIGURE 105

88. Reinstall the exhaust pipe section located between the DPF and the flexible section. Use the following hardware:
    - ***V-band clamp #21021850 (2x)***
    - ***Gasket #21095726 (2x)***

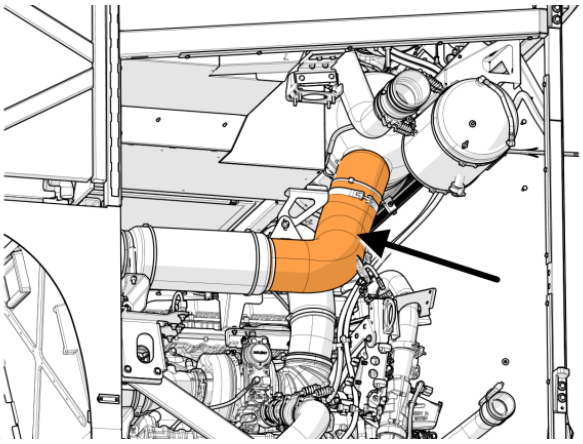

FIGURE 106: REINSTALL THIS EXHAUST PIPE SECTION

89. Pre-install the new radiator inlet pipe #050309.

A: #052889 silicone hose

B: # 992089 hose clamp (4x); final torque: 30 lbf-in

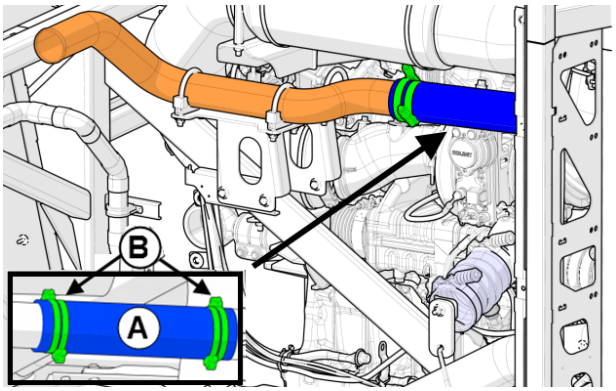

FIGURE 107

90. Install **seven (7) nylon tie mounts** centered on the beam, as shown in the picture. Drill Ø ¼ in. Use the following hardware:
    - ***Tie mount #509490 (7x)***
    - ***Rivet #504610 (7x)***

Spacing between each tie mount: 6½" approximately.

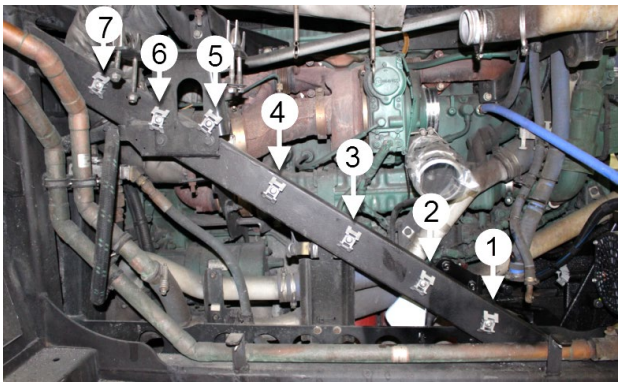

FIGURE 108

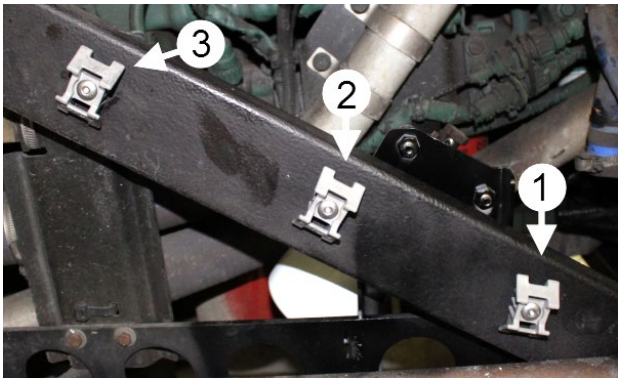

FIGURE 109

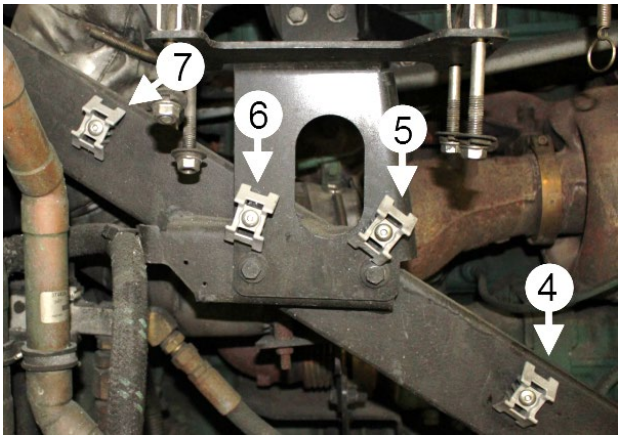

FIGURE 110

91. Install **five (5) nylon tie mounts** as shown in the picture. Drill Ø ¼″. Use the following hardware:
    - ***Tie mount #509490 (5x)***
    - ***Rivet #504610 (5x)***

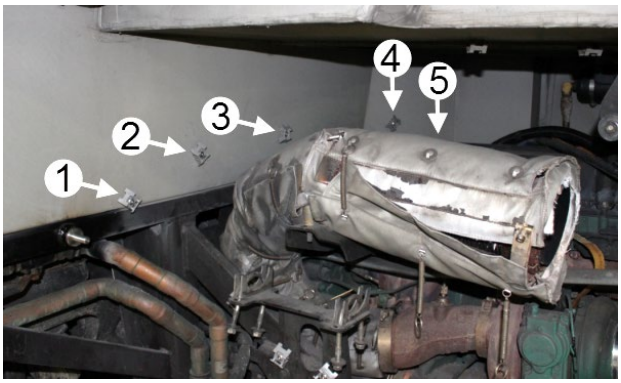

FIGURE 111

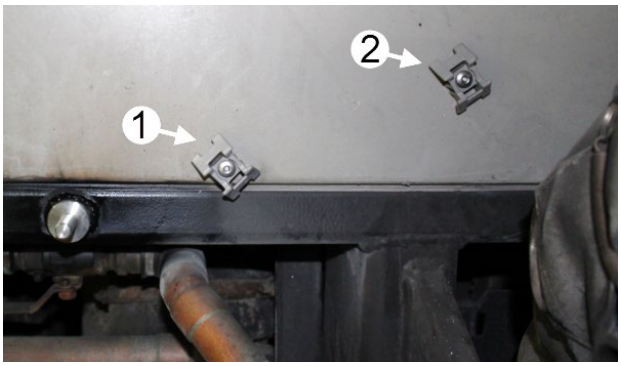

FIGURE 112

FIGURE 113: TIE MOUNT 3 & 4 SHALL NOT BE PLACED BETWEEN THE BULKHEAD AND THE VALVE COVER.

92. On the bracket shown on the image, drill a hole of Ø 11/32″. and then install a nylon tie with fir tree **#504750**.

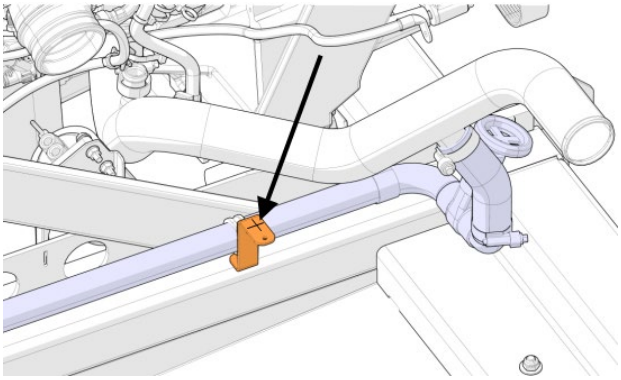

FIGURE 114: BRACKET ON THE ENGINE HOT SIDE

DIAGRAM OF ELECTRICAL CONNECTIONS

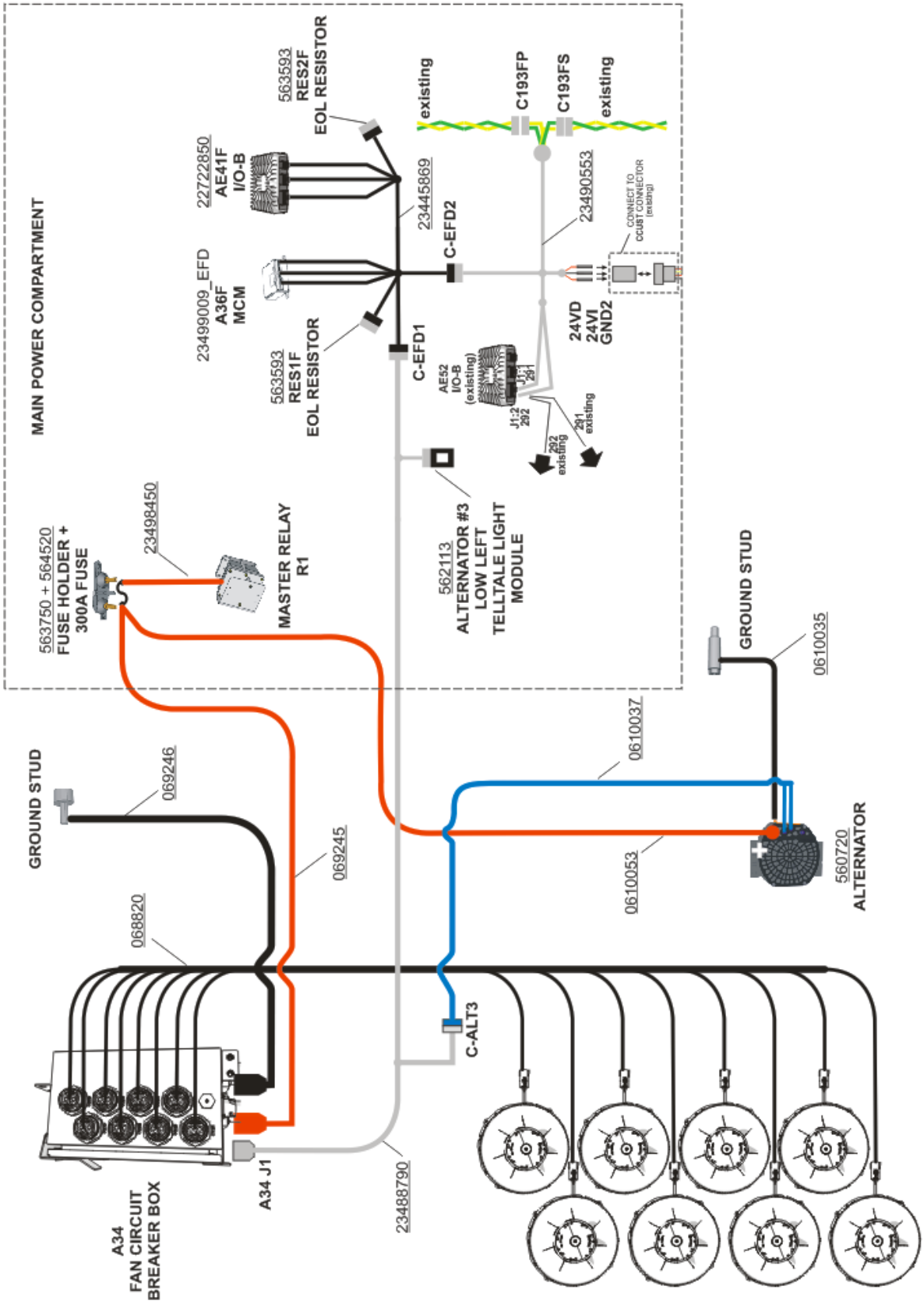

93. Hook up the “alternator power cable” #0610053 to the alternator positive (+) post. Place the flash washer between the cable lug and the nut.

1x nut #500685torque: 80-125 lbf-in

1x flat washer #5001341

Apply Color Guard rubber coating at the alternator ground (⏚) and positive (+) connections.

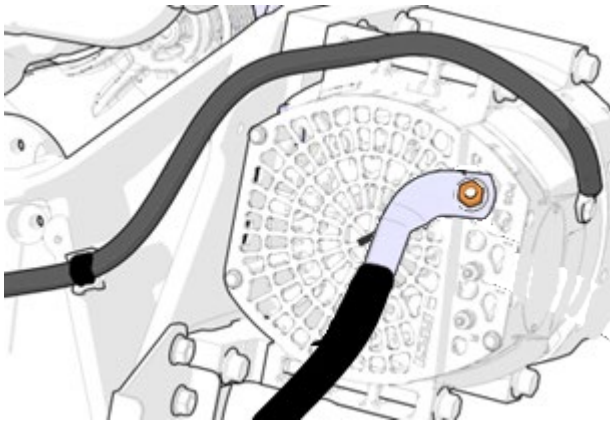

FIGURE 115

IMPORTANT NOTE

Early alternators are provided with a shorter positive stud.

With the short stud, nut #500685 does not thread fully to allow the locking nylon insert to grip on the threads.

In this case, **DO NOT** use nut #500685. Use the nut and lock washer provided with the alternator instead. Tighten to: **80-125 lb-po (9.0-14.0 N-m)**.

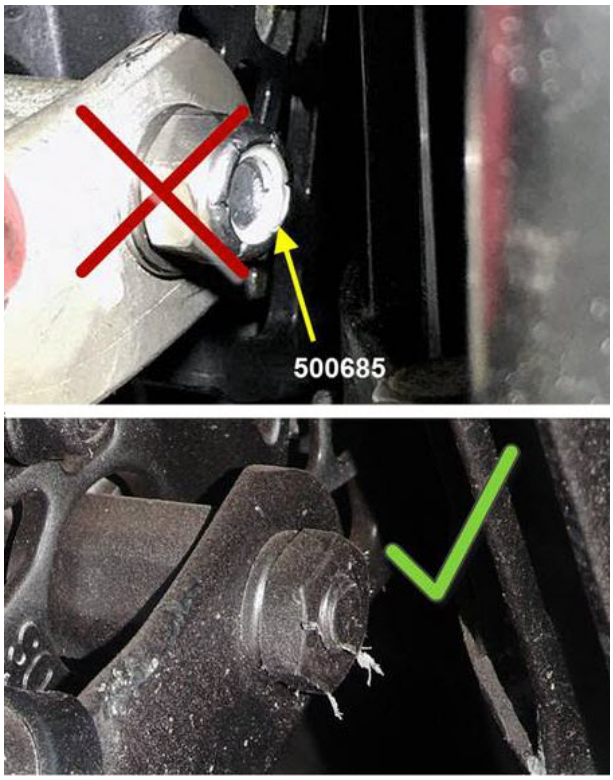

FIGURE 116:

-NUT #500685 DOES NOT THREAD FULLY TO ALLOW THE LOCKING NYLON INSERT TO GRIP ON THE THREADS (UPPER IMAGE)

-HARDWARE TO USE WITH SHORT STUD (LOWER IMAGE)

94. Secure the alternator power cable with the nylon tie with fir tree previously installed.

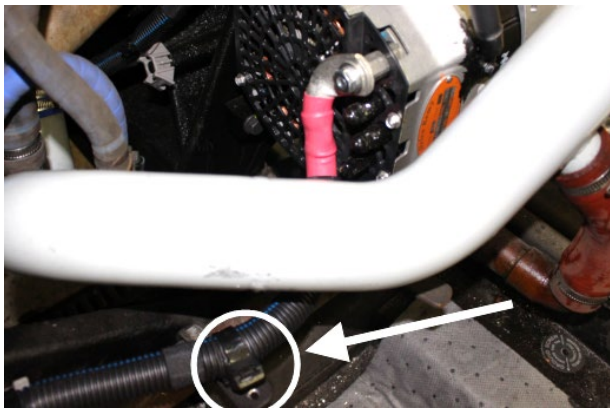

FIGURE 117

95. Secure the alternator power cable to the tie mounts previously installed using nylon ties:
    - ***nylon tie #509491 (7x)***

FIGURE 118

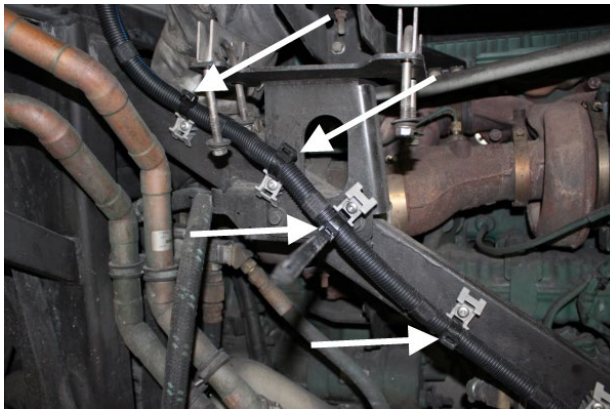

FIGURE 119

96. On the diagonal member located under the previously welded ground stud, install a nylon tie mount. Use:

    - ***Tie mount #509490 (1x)***
    - ***Rivet #504610 (1x)***

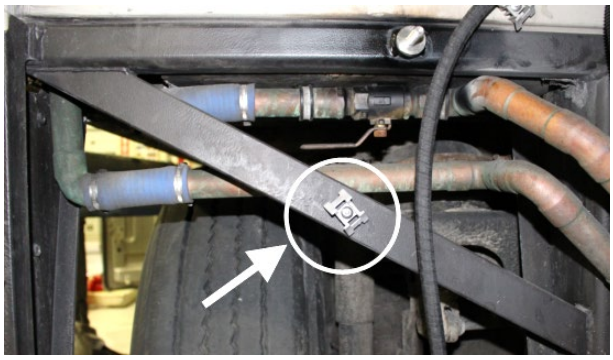

FIGURE 120

97. Partially install the “fan drive power cable” #0610563. Secure the tie mount using a nylon tie. Keep the nylon tie loose.

DO NOT TIGHTEN THE NYLON TIES AT THIS MOMENT

A: nylon tie #509491 (1x)

B: fan drive power cable #0610563

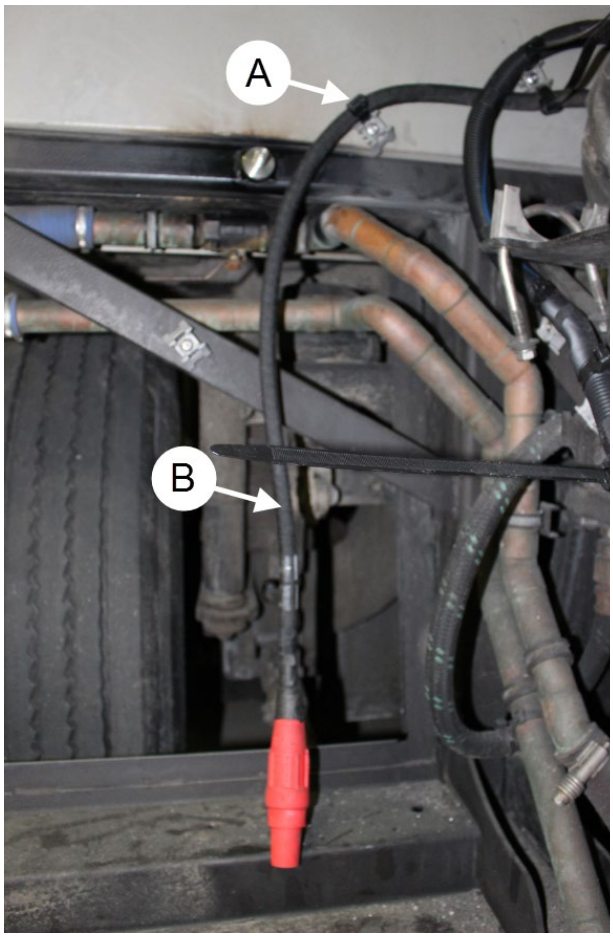

FIGURE 121

98. Install the “fan drive ground cable” #069246 and connect to the ground stud previously welded to the chassis.

DO NOT TIGHTEN THE NYLON TIES AT THIS MOMENT

A: fan drive ground cable #069246

B: fan drive power cable #0610563

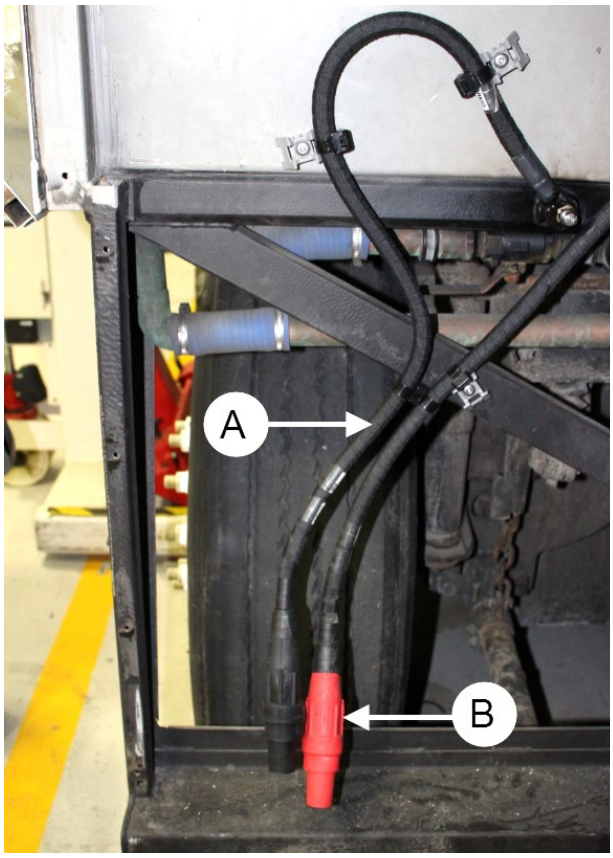

FIGURE 122

C: split lock washer #500482 + brass nut #500998

D: tie mount #509490 (1x) + rivet #504610 (1x) + nylon tie #509491 (1x)

DO NOT TIGHTEN THE NYLON TIES AT THIS MOMENT

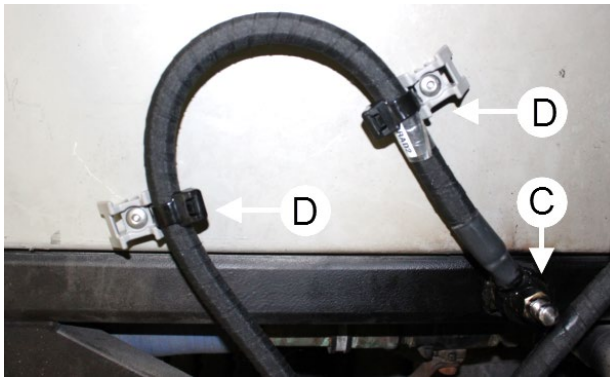

FIGURE 123

A: fan drive ground cable #069246

B: fan drive power cable #0610563

D: tie mount #509490 (1x) + rivet #504610 (1x) + nylon tie #509491 (1x)

E: « handcuff » nylon tie #N37749 (1x)

DO NOT TIGHTEN THE NYLON TIES AT THIS MOMENT

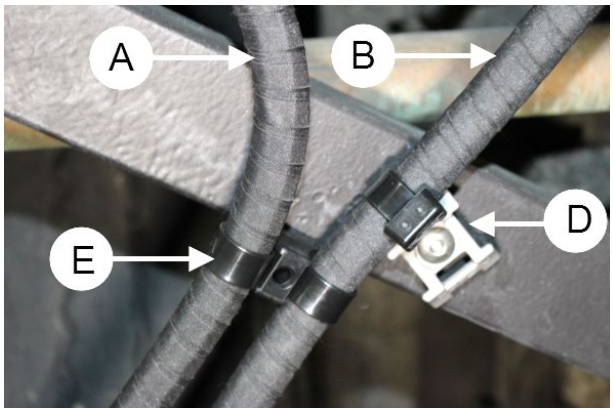

FIGURE 124

99. When stretched, the end of the ground cable and the fan drive power cable connector should be at approximately **1½" to 2¼" (38 mm to 57 mm)** from the lower flat surface.
100. Once properly adjusted, tighten the nylon ties previously installed.

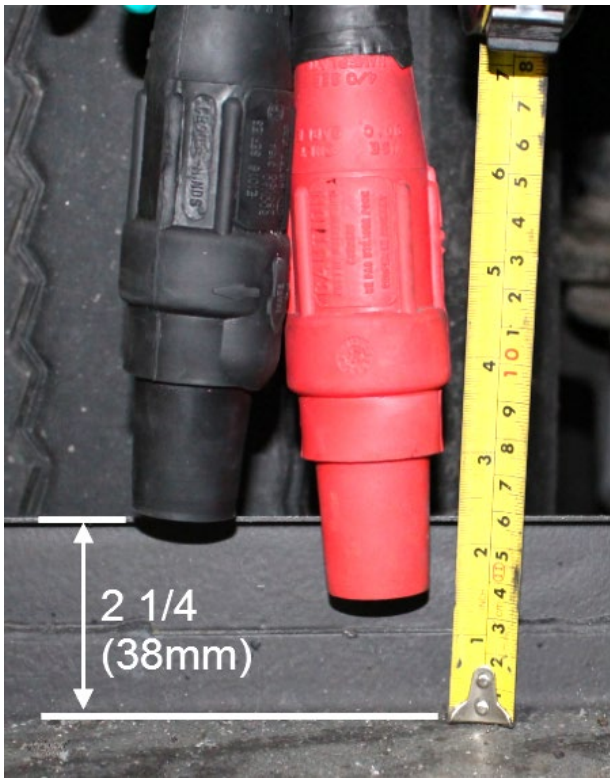

FIGURE 125

101. Apply Loctite Color Guard Rubber Coating on the ground stud connection.

FIGURE 126: GROUND STUD WITH RUBBER COATING

102. Connect the “alternator control cable” #0610037 on the alternator.

Connect circuit **I** to Indicator (I) post.

Connect circuit **S** to Sense (S) post.

Use the following hardware:

- ***2x nut with nylon insert #5001180***
- ***2x washer #5001137***

Tighten to the following torque values:

Sense (S): 25-45 lb-in

Indicator (I): 25-45 lb-in

Apply Color Guard rubber coating on connections.

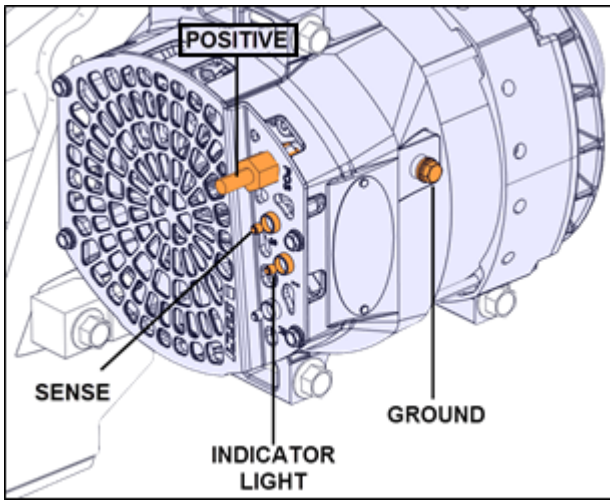

FIGURE 127

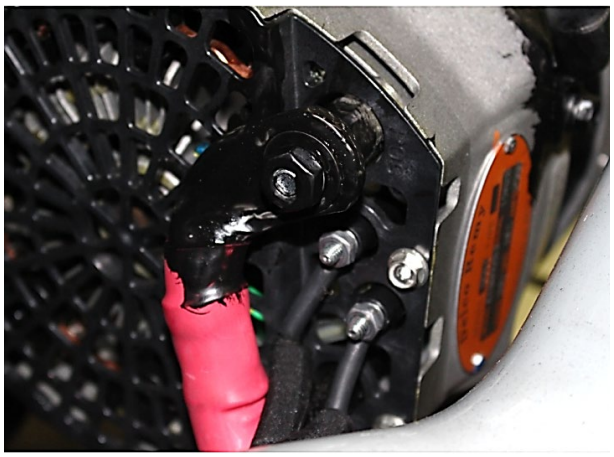

FIGURE 128

103. Partially route the “alternator control cable” #0610037 along the “alternator power cable” as shown on the images. Secure the “alternator control cable” on the “alternator power cable” using nylon ties.

A: nylon tie #504016 (9x)

B: « handcuff » type nylon tie #N37749 as required

NOTE: The “alternator control cable” #0610037 will be connected to the “fan to RJB interface” harness #23488790. For this reason, do not route the “alternator control cable” further than what is shown on the images.

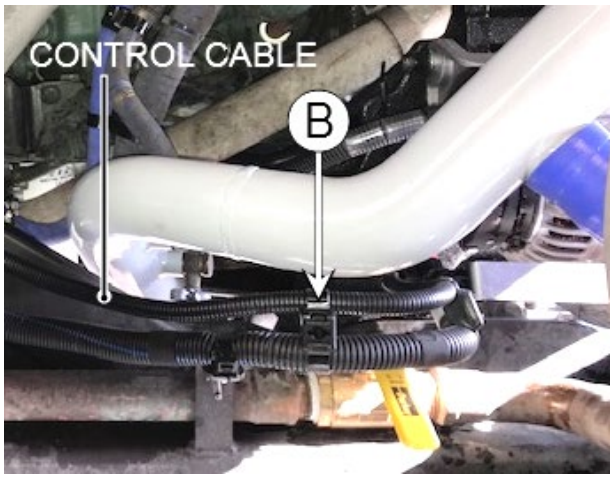

FIGURE 129

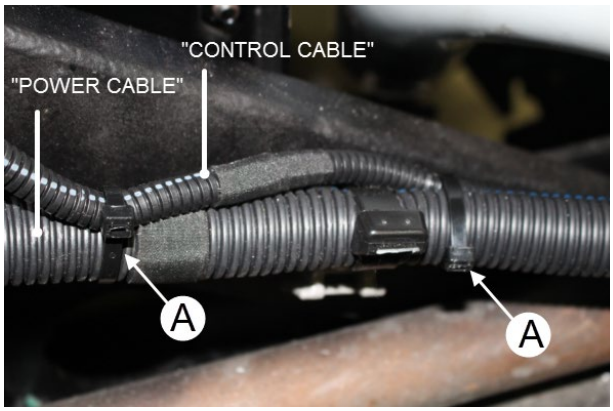

FIGURE 130

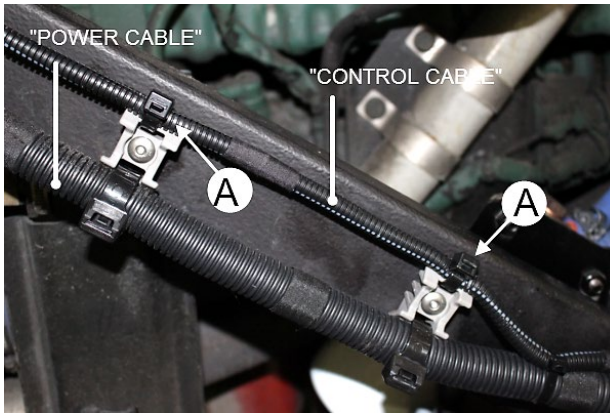

FIGURE 131

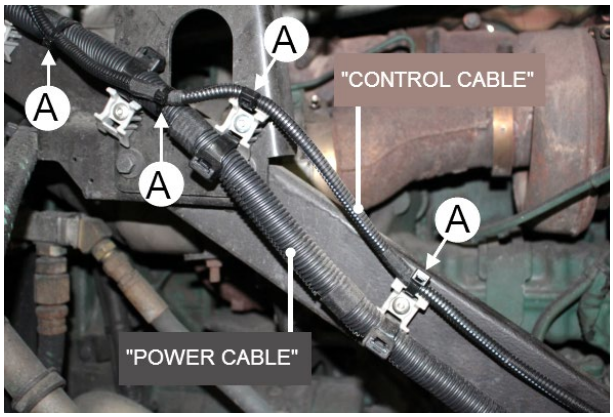

FIGURE 132

FIGURE 133

104. Route the "***fan drive power cable***" and the "***alternator power cable***" towards the electrical compartment.

DO NOT PASS THE CABLES through the upper cable boot AT THIS MOMENT. Refer to the pictures at right as a guide for the installation.

Secure both cables with the four (4) tie mounts previously installed. Secure the cables on the tie mounts as previously done with nylon ties.

A: nylon tie #509491 (8x)

DO NOT TIGHTEN THE NYLON TIES AT THIS MOMENT

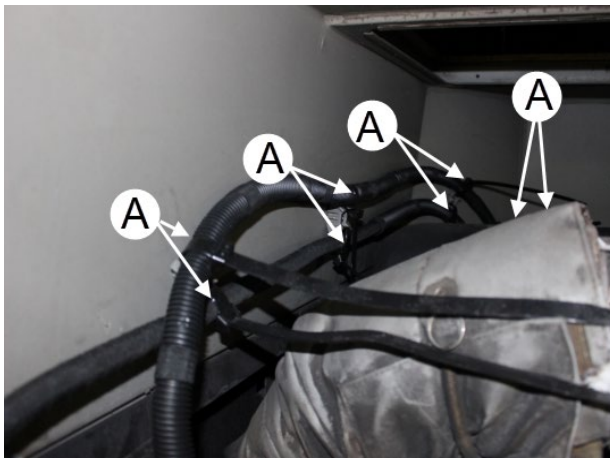

FIGURE 134

105. Route the “fan to RJB interface harness” #23488790 up to the electrical compartment, passing through the upper cable boot. But first, place connector A34-J1 next to the red connector of the fan drive power cable (see image at right).

A: fan to RJB interface harness #23488790

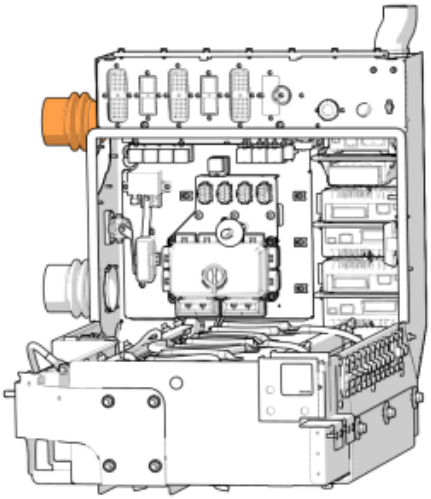

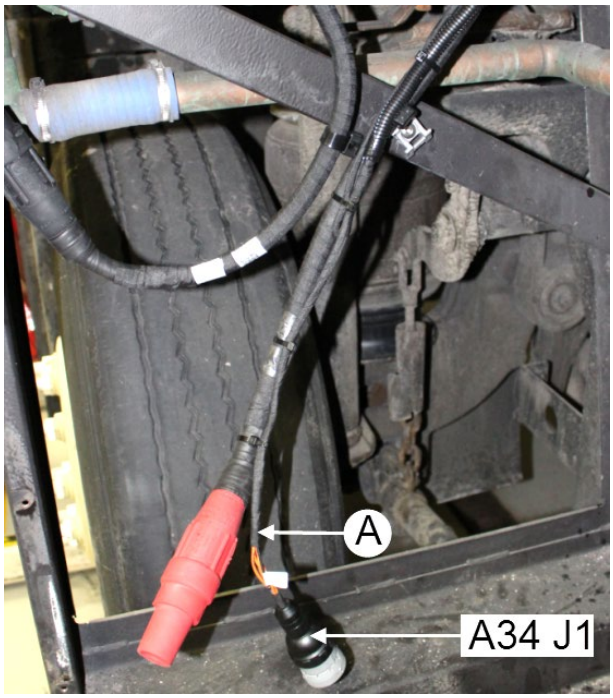

FIGURE 135

106. Secure harness #23488790 along the fan drive power cable, placing a nylon tie #504016 every 6 ″ (150 mm).

DO NOT TIGHTEN THE NYLON TIES AT THIS MOMENT

FIGURE 136

107. Secure connector C-ALT3 as shown on the image with one (1) nylon tie #504016 and then connect to the alternator control cable #0610037 previously installed.

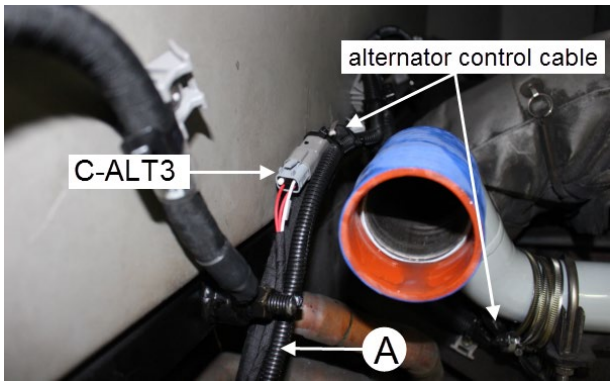

FIGURE 137

108. Pre-install the new **CAC inlet pipe** #050328. Use one new #030096 CAC **flexible hose**. Secure the hose using two (2) spring-loaded clamps #21490630.

- ***#030096 hose (1x)***
- ***#21490630 spring loaded clamp (2X), final torque: 5 lbf-ft***

NOTE: <u>On vehicles prior serial G-5932 (2016)</u>, remove the 90° elbow diffuser pipe and replace with straight turbo diffuser pipe #053662. Use the following parts:

A: straight turbo diffuser pipe #053662 (1x)

B: gasket #21096684 (1x)

C: V-band clamp #20592787 (1x)

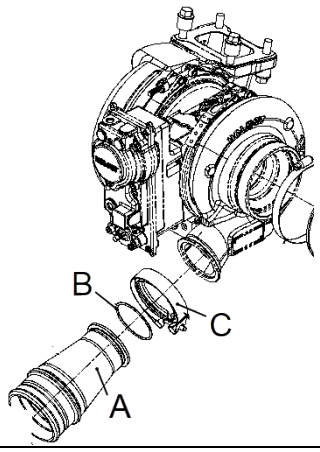

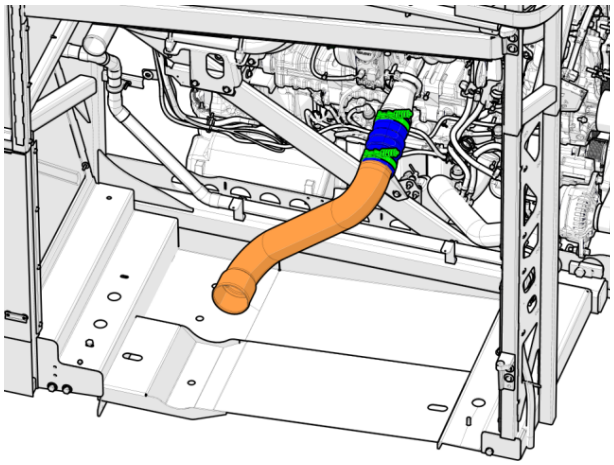

FIGURE 138: CONNECTION AT THE TURBO OUTLET ELBOW

109. Preinstall all the flexible hoses at the cooling pack connections. Use the following parts:

A: flexible hose #531469 (1x)

B: flexible hose #531471 (1x)

C: silicone hose #053617 (2x)

D: clamp #21490616 (8x)

E: caillau clamp #992089 (8x)

For proper clamp torque, refer to HOSE CLAMP TORQUE on page 12

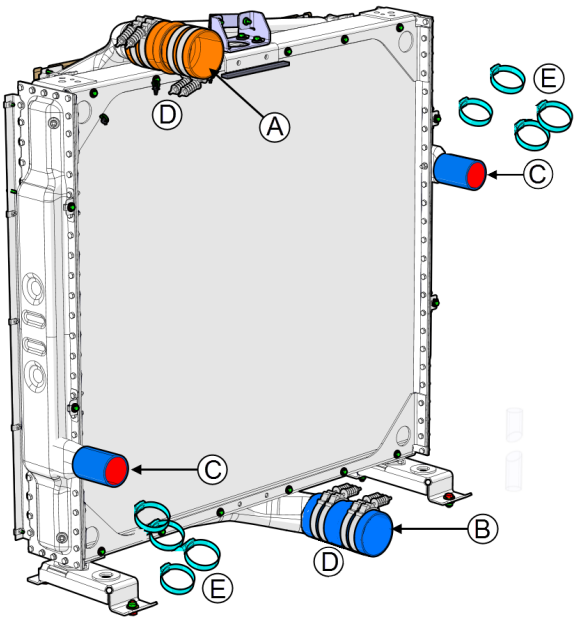

FIGURE 139

110.Prepare the **cooling pack upper attachment** with the three (3) rectangular plates (see image) recovered from the former installation and the following parts:

A: anti-vibration mount #21185073

B: upper radiator support #050351

C: 2x screw #5001738 , 2x nut #502837

D: 2x screw #5001738 , 2x washer #500942

E: 2x screw #5001745 , 2x washer #500942

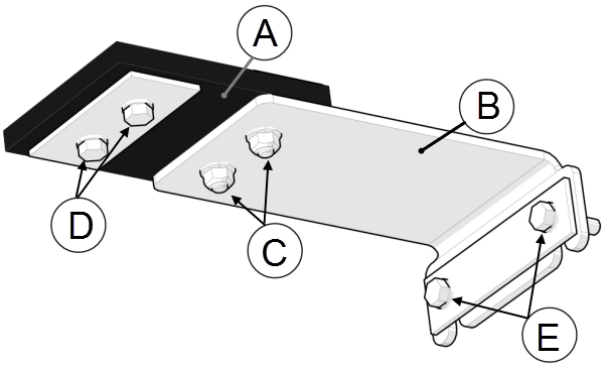

FIGURE 140:

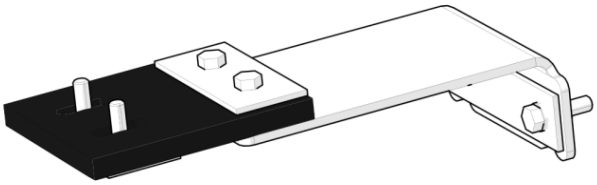

FIGURE 141

111.Install the upper attachment on the cooling pack.

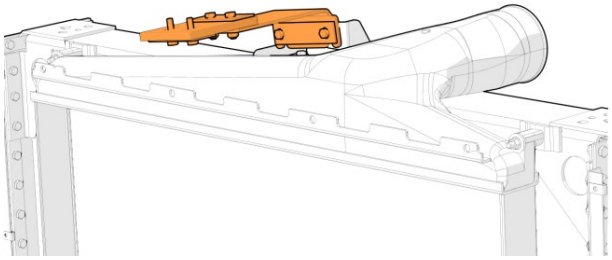

FIGURE 142

112.Reinstall the cooling pack in its compartment.

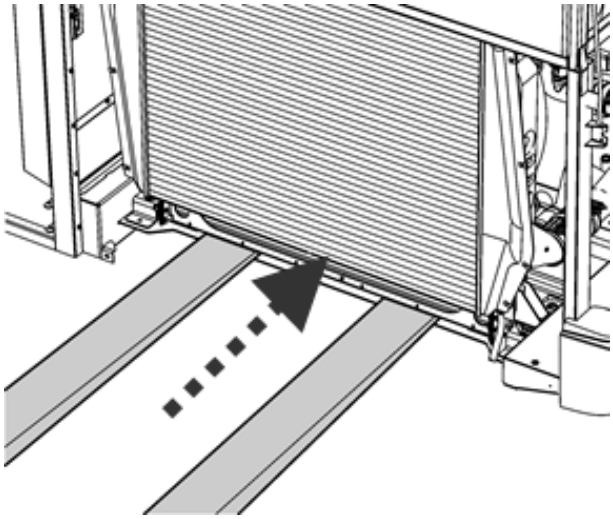

FIGURE 143

113. Secure the cooling pack base with the following parts:

A: screw #502804 (4x)

B: washer #5001751 (8x)

C: nut #502859 (4x)

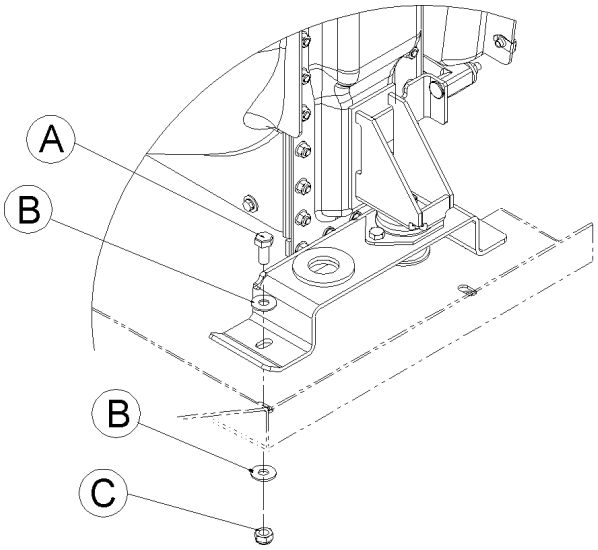

FIGURE 144

114. Bolt the anti-vibration mount onto the vehicle chassis

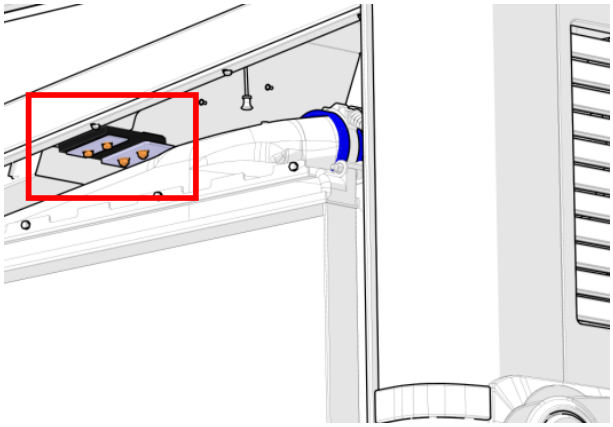

FIGURE 145

115. Complete the connection with the cooling pack.

For proper clamp torque, refer to HOSE CLAMP TORQUE on page 12

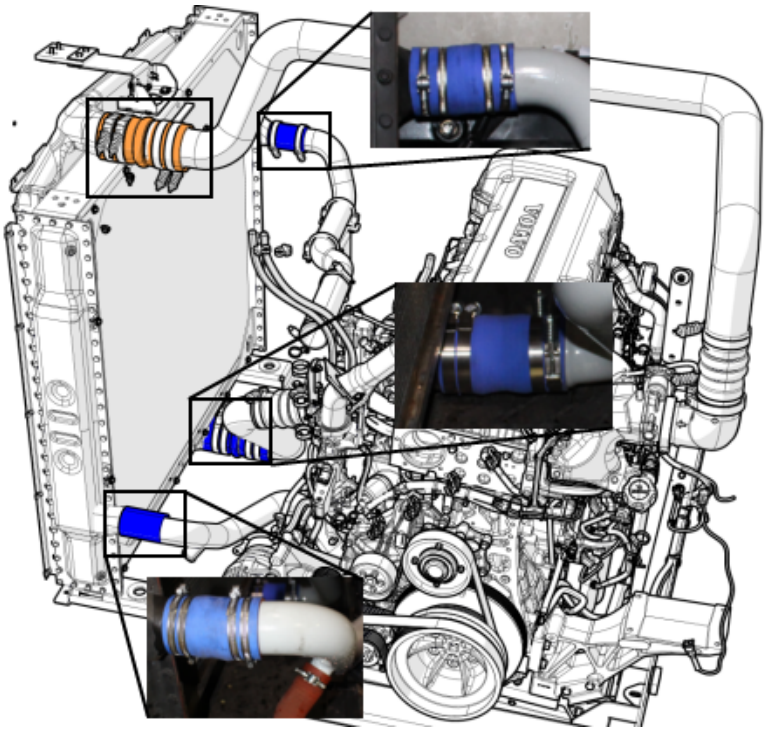

FIGURE 146

116. Connect the **radiator vent hose** on top of the radiator.

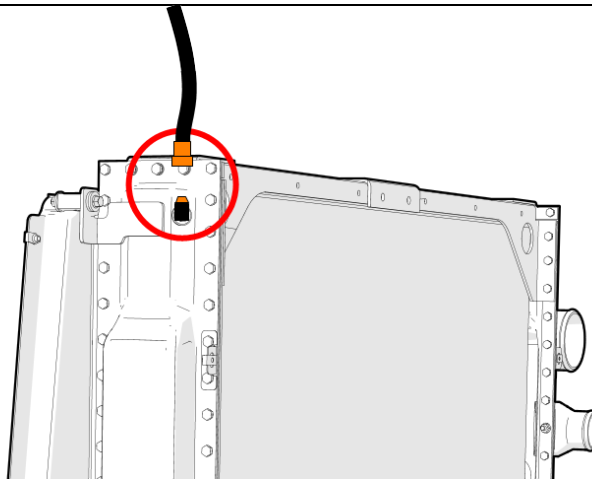

FIGURE 147

117. Reinstall the cooling pack protector tube with the following hardware:

A: Screw #502804 (3x)

B: split lock washer #5001737 (3x)

C: flat washer #5001751 (2)

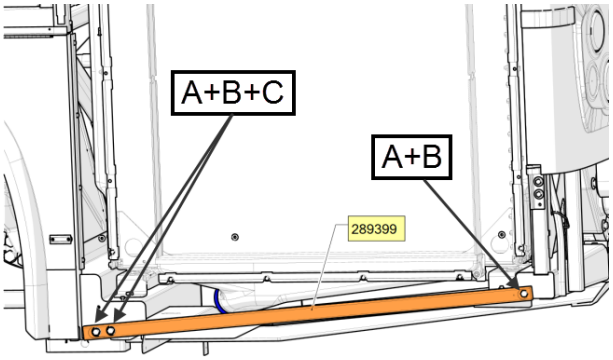

FIGURE 148

118. Remove all the old spring nuts on the cooling pack and replace with new spring nuts.

- ***spring nut #5001965 (18x)***

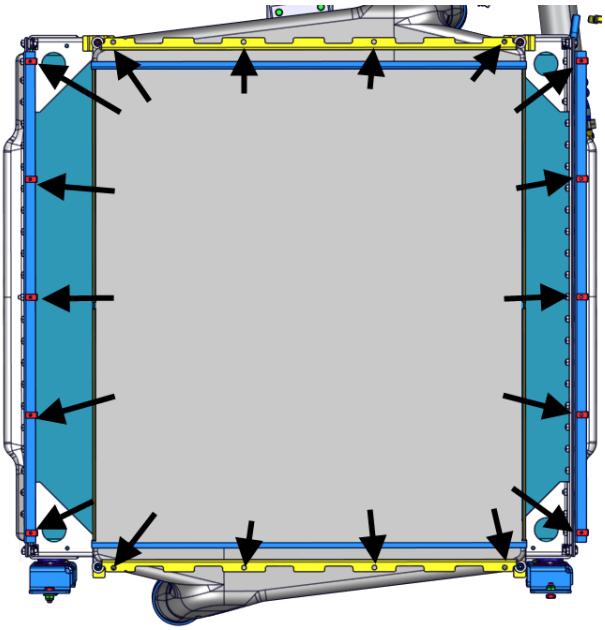

FIGURE 149

119. Install the sealing element #**050355**. Secure with the following hardware:

4x bolt #5001697

4x lock washer #502570

Use foam tape #506040 to fill the gap between the sealing element and the charge air cooler if necessary.

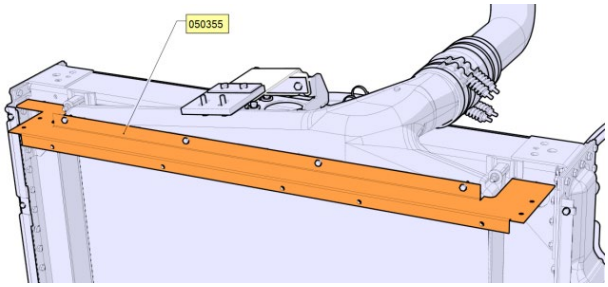

FIGURE 150

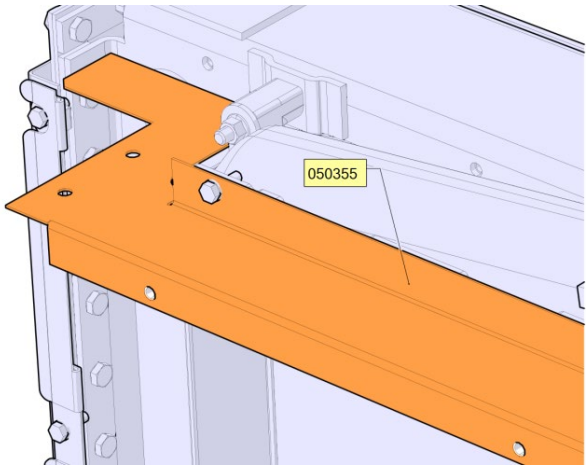

FIGURE 151

120. Install the sealing element #**050362**. Screw it on the existing threaded holes on the bottom of the radiator. Secure with the following hardware:

4x bolt #5001697

4x lock washer #502570

Use foam tape #506040 to fill the gap between the sealing element and the charge air cooler if necessary.

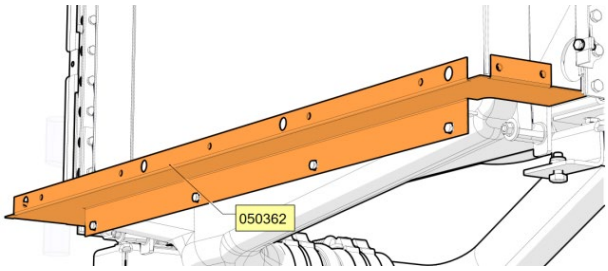

FIGURE 152

121. Install the sealing element #***050360.*** Screw them onto the upper and lower sealing elements installed at the previous steps. Secure with the following hardware:

9x bolt #5001697

9x lock washer #502570

A: #050360

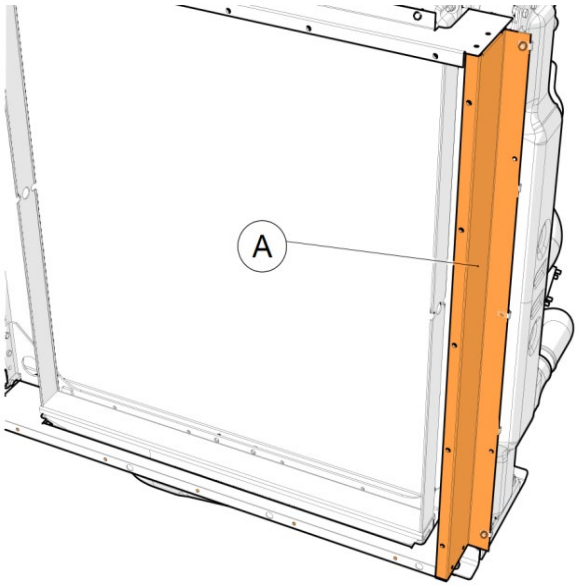

FIGURE 153

122. Install the sealing element #***050380.*** Secure with the following hardware:

5x bolt #5001697

5x lock washer #502570

B: #050380

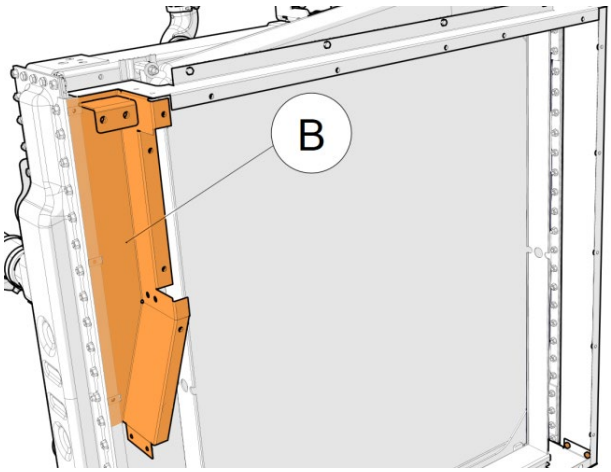

FIGURE 154

123. Install the sealing element #***050359.*** Secure with the following hardware:

6x bolt #5001697

6x lock washer #502570

C: #050359

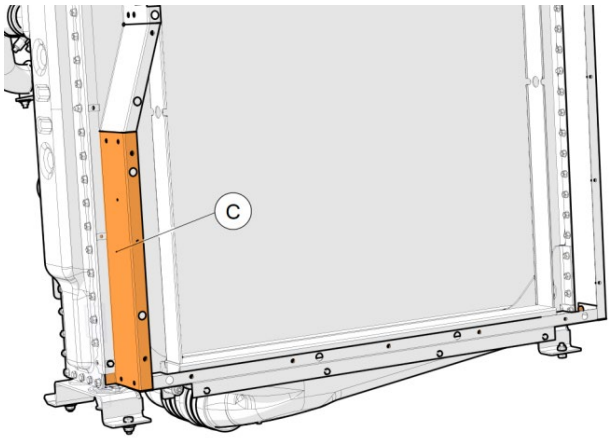

FIGURE 155

124. Cut two pieces of 39 $^{3}/_{8}$ ″ (1000 mm) long of **rubber extrusion #506025**.

125. Using good industrial glue (Loctite 404 or similar product), glue the two pieces of rubber extrusion centered on the reinforcement angles of fan support panel **#050343**.

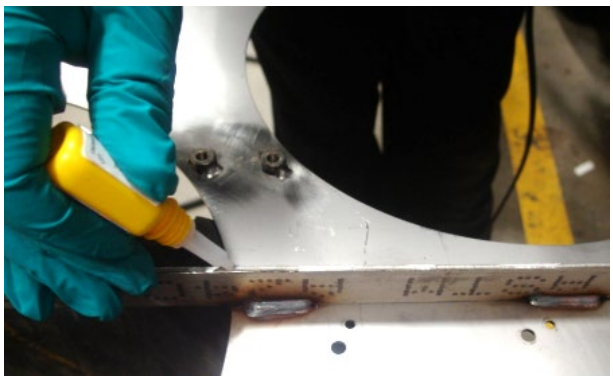

FIGURE 156

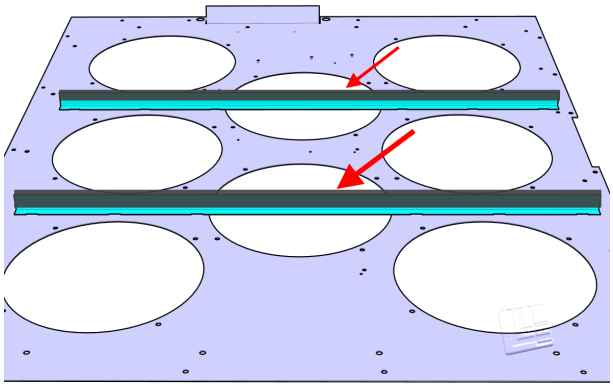

FIGURE 157

126. Install panel **#050343**. Secure with the following hardware:

22 x bolt #5001697

22 x lock washer #502570

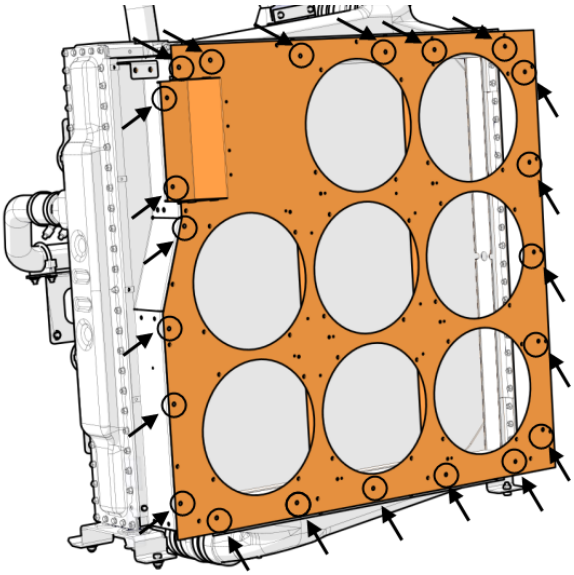

FIGURE 158

127.Install the circuit breaker box #564612.

Install with the following hardware:

4x bolt #500119

4x lock washer #5001868

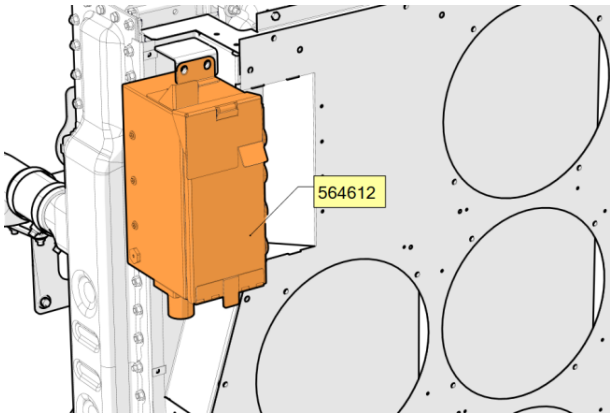

FIGURE 159

128. Install the upper sealing element #050366.

Secure with the following hardware:

5x bolt #5001697

5x lock washer #502570

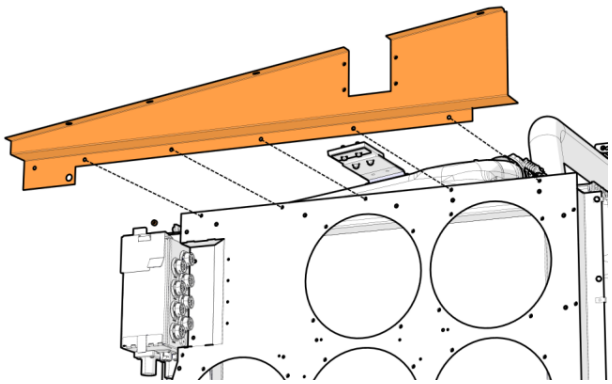

FIGURE 160

129. Install the pull-rod box #050369.
Secure with the following hardware:
4x bolt #5001697
4x lock washer #502570

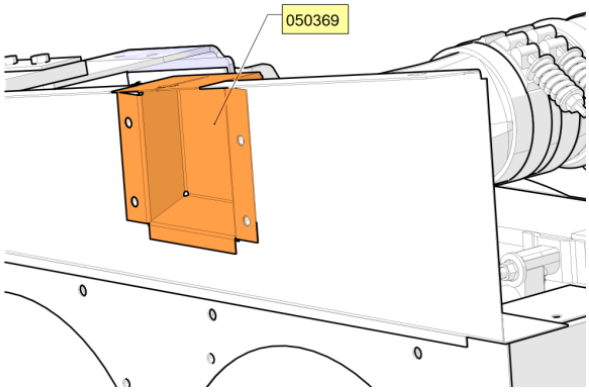

FIGURE 161

130. Install the lower sealing element #050365.
Secure with the following hardware:
4x bolt #5001697
4x lock washer #502570

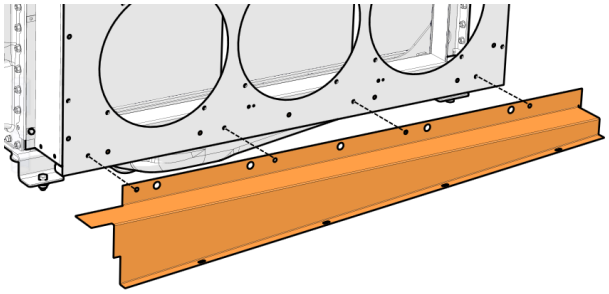

FIGURE 162

131. Install the R.H. side sealing element #**050367**.
Secure with the following hardware:
bolts #5001697 (5x)
lock washers #502570 (5x)

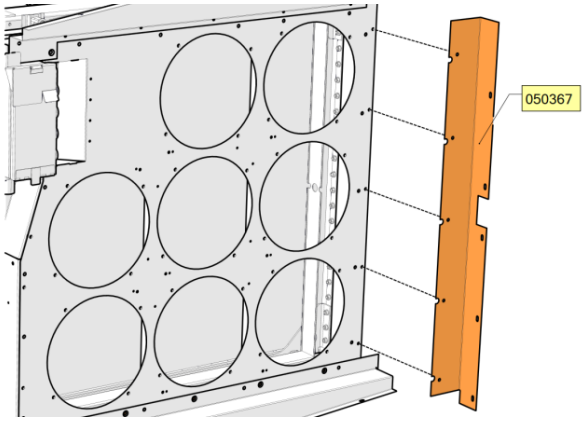

FIGURE 163

132. Install the **fans** and **<u>fan hand guards</u>** on the panel. Snap the fan blue connector in the holes punched on the panel for that matter.

FAN HAND GUARD

Install with the following hardware:

32x bolts #502686

32x lock washers #5001833

Prescribed torque:40 lbf-in

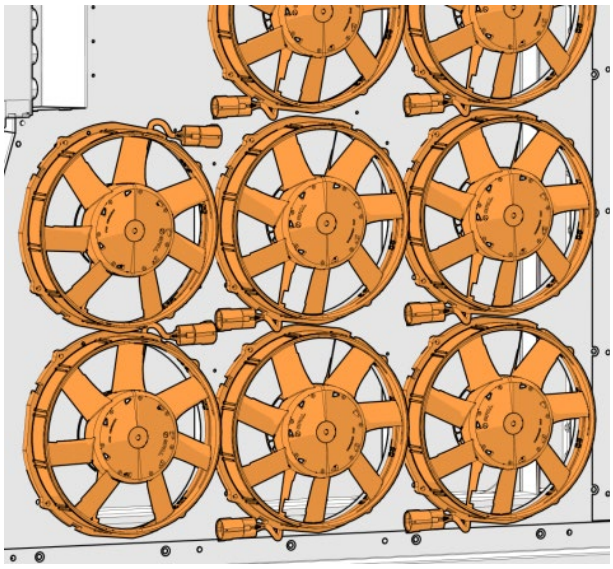

FIGURE 164

133. Get the fan drive harnesses kit #068820. **Take note that each harness is specifically identified with a number corresponding to an appropriate fan location**.

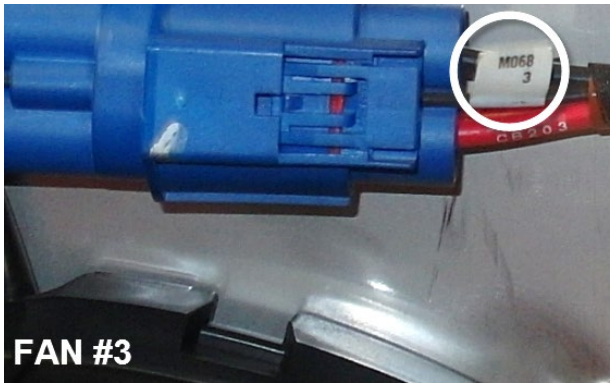

FIGURE 165

134. Route and secure the fan harnesses as shown on the images.

Secure with the following parts:

A= nylon tie mount #504013 + rivet #504379 + nylon tie #504016

(11x)

B= nylon tie #504016 (4x)

Do not tighten the nylon ties at this moment

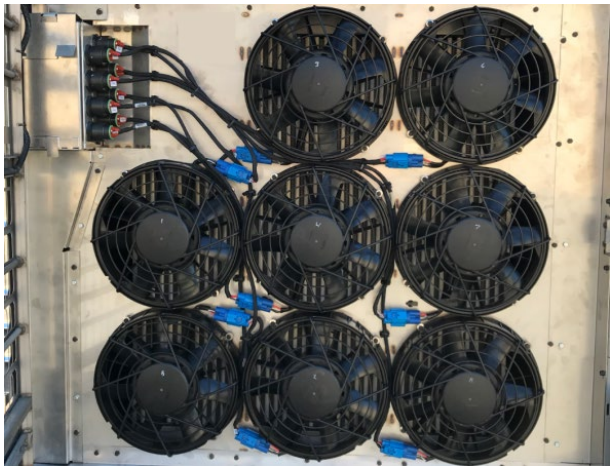

FIGURE 166

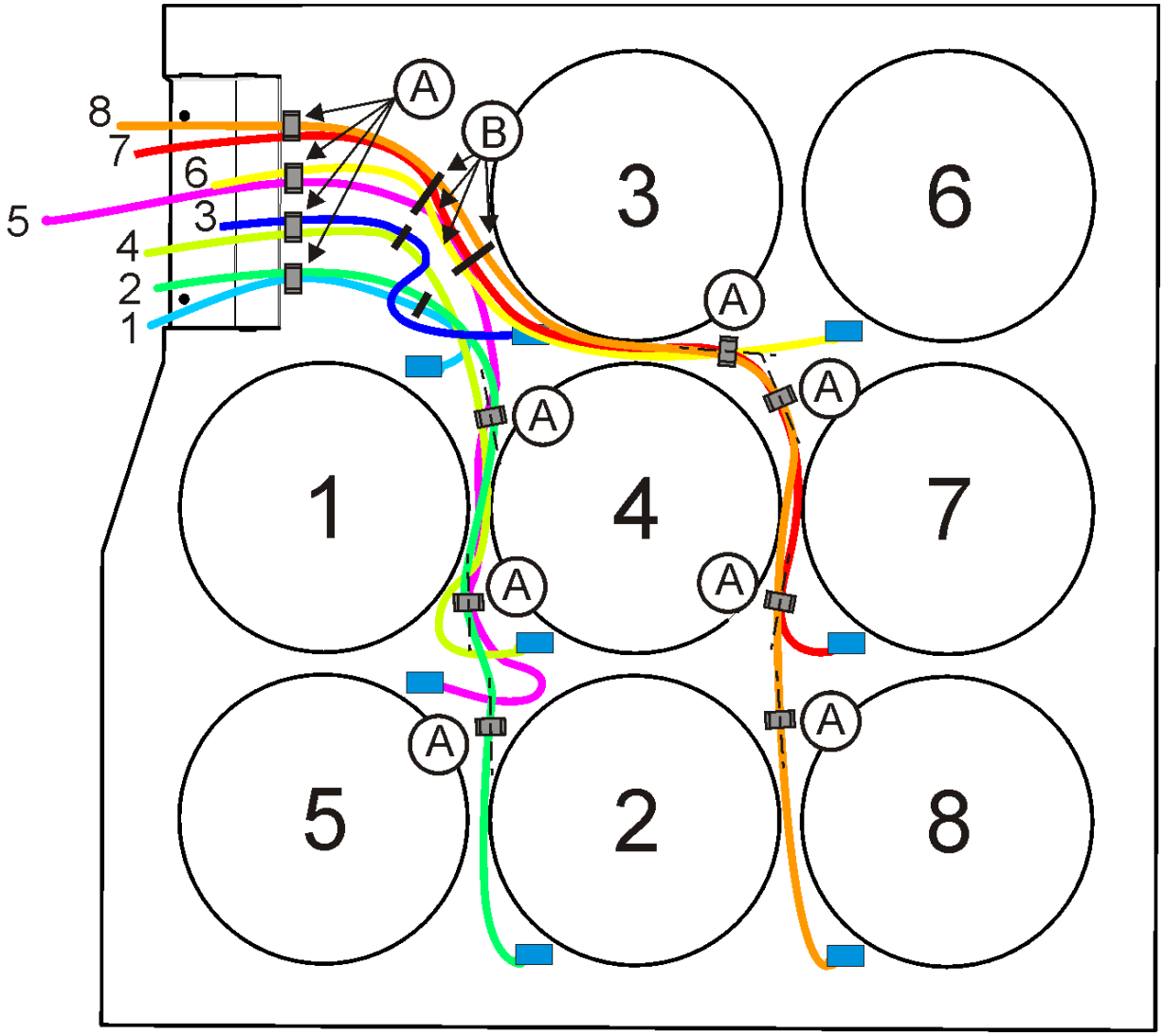

FIGURE 167

135. Connect each fan to the corresponding connection port on the circuit breaker box.

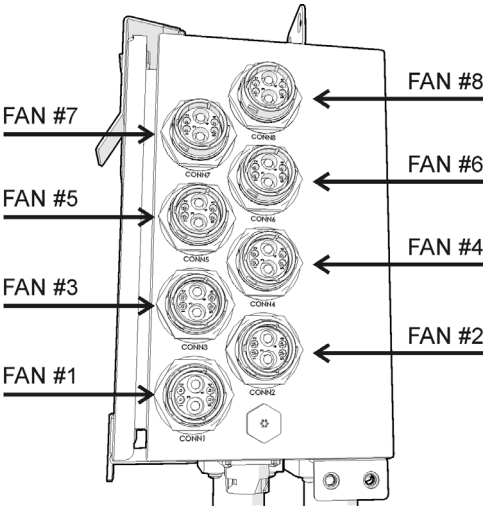

FIGURE 168

136. Using the blue hose previously saved, make a protective sheath. Cut to an appropriate size and secure around the cables using nylon ties.

FIGURE 169

137. Complete the connection to the fan circuit breaker box (three connectors: gray, black and red).

A: fan drive ground cable (black connector)

B: fan drive power cable (red connector)

C: "fan to RJB interface" harness (gray connector)

Secure the cables appropriately using nylon ties and/or « handcuff » type nylon tie #N37749 as required

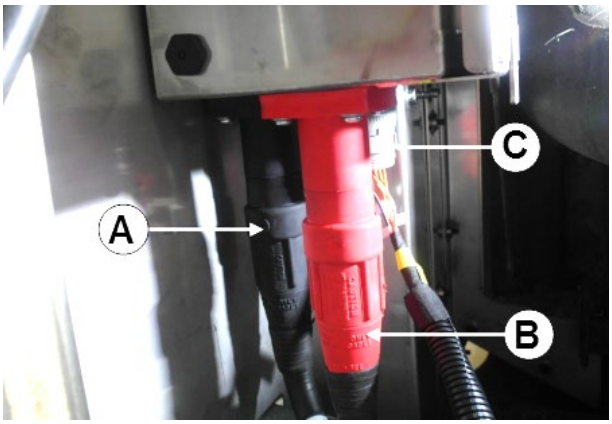

FIGURE 170

FIGURE 171

138. Install the sealing element #**050415**.

Secure with the following hardware:

- ***bolts #5001697 (1x)***
- ***lock washers #502570 (1x)***

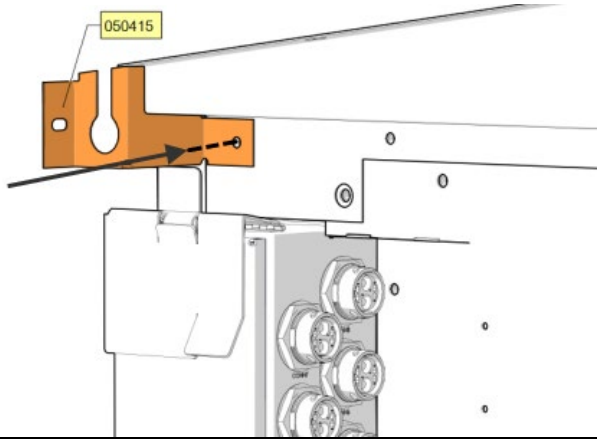

FIGURE 172

139. Install the sealing element #**050364**.

Secure with the following hardware:

- ***screw #502848 (1x)***

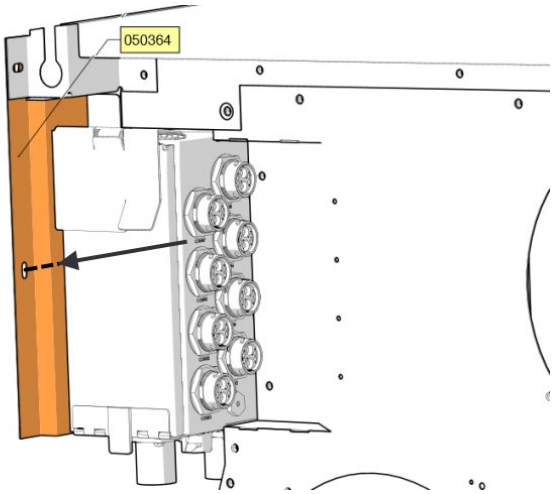

FIGURE 173

140. Install the sealing element #050363.

Secure with the following hardware:

- ***bolts #5001697 (4x)***
- ***lock washers #502570 (4x)***

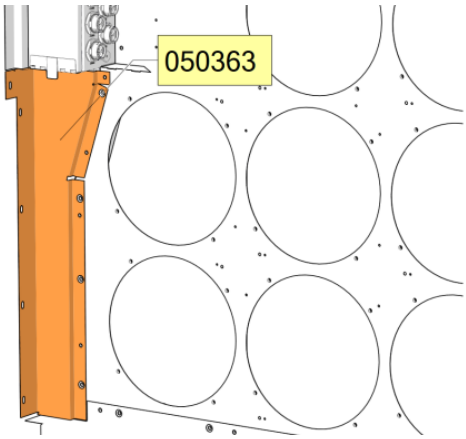

FIGURE 174

141. Complete the installation of the sealing elements. Screw the panels to the chassis threaded holes where shown on the image.

Use the following hardware:

- ***screw #502848 (19x)***

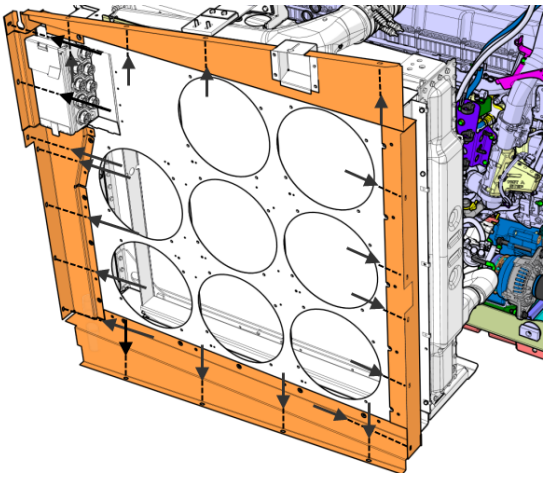

FIGURE 175

INSTALLATION OF ELECTRIC COMPONENTS AND HARNESS CONNECTIONS IN THE MAIN POWER COMPARTMENT

PREVOST

DIAGRAM OF ELECTRICAL CONNECTIONS

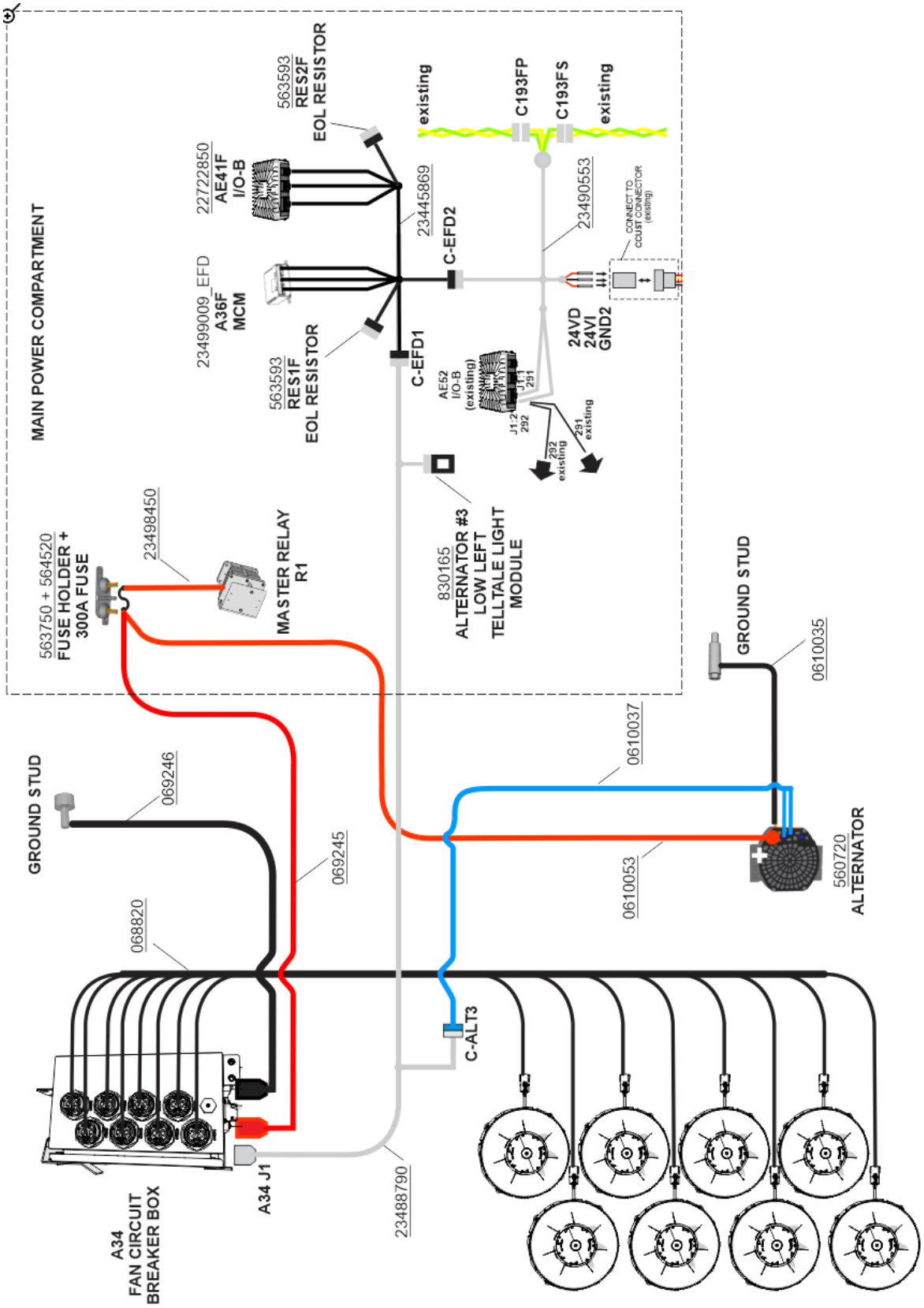

142. In the battery compartment, disconnect the battery ground cable from the chassis ground stud.

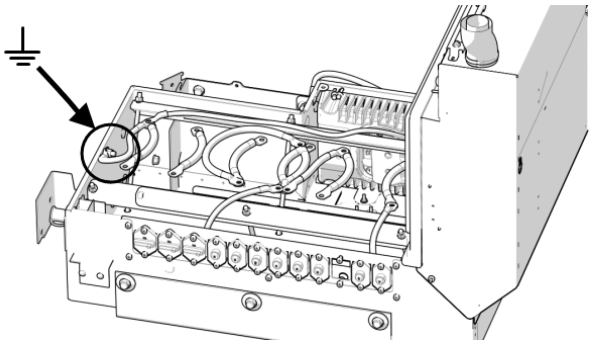

FIGURE 176

143. Make sure there is no voltage applied to the master relay R1 posts and then, remove the master relay R1 cover <u>if applicable</u>.

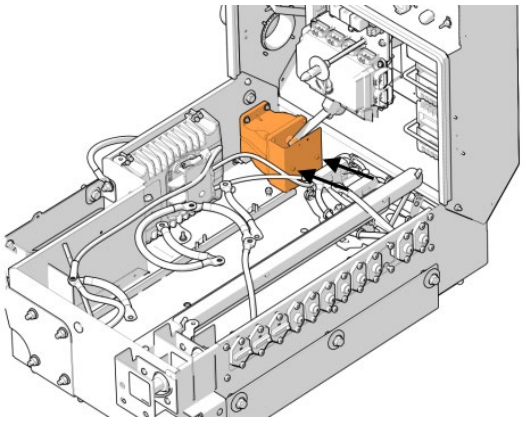

FIGURE 177

144. Complete the routing of the "***fan drive power cable***" and the "***alternator power cable***" inside the electrical compartment through the upper cable boot.

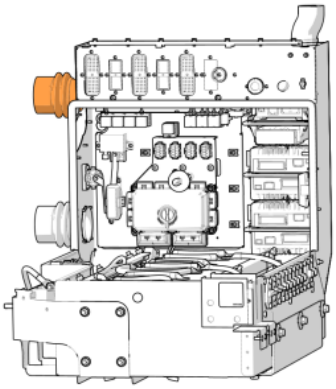

FIGURE 178

145. Install the **fuse holder #563750** at the location shown on the image. To do so, drill two 11/64 pilot holes for the installation of the fuse holder Secure with the following hardware:

A: tapping screw #500658 + flat washer #5001341

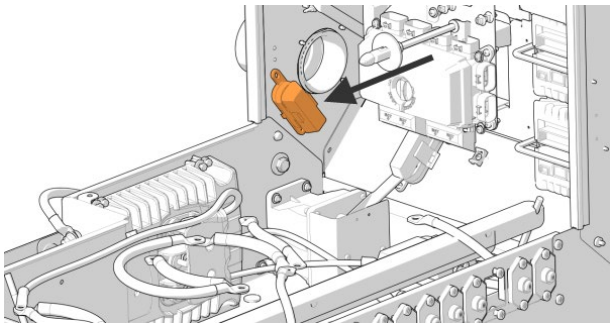

FIGURE 179

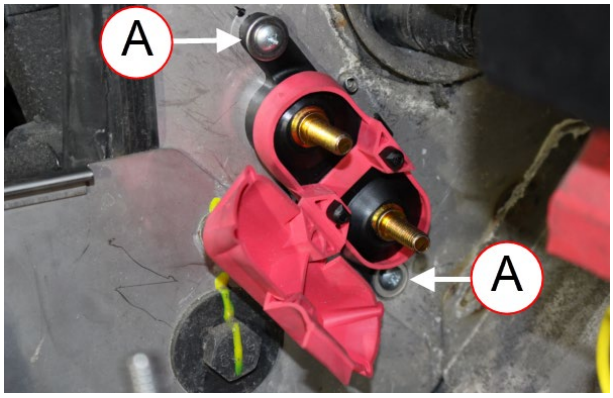

FIGURE 180

146. Prepare to the installation of the MCM module #23499009_EFD.

First, use the MCM as a template to mark the drilling position. Drill three holes of Ø1/4″.

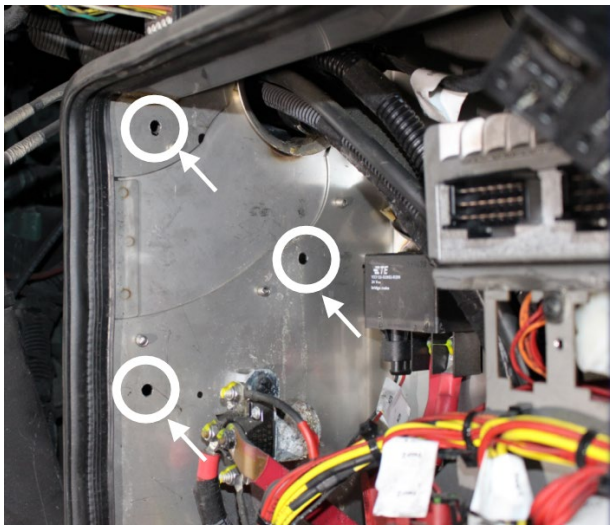

FIGURE 181

147. Prepare the mounting screws as shown on the image using the following hardware.

A: Screw #502888 (3x)

B: Flat washer #502709 (9x)

C: Nut #502854 (3x)

Note: At each of the three mounting points, there is a flat washer on the other side of the bulkhead.

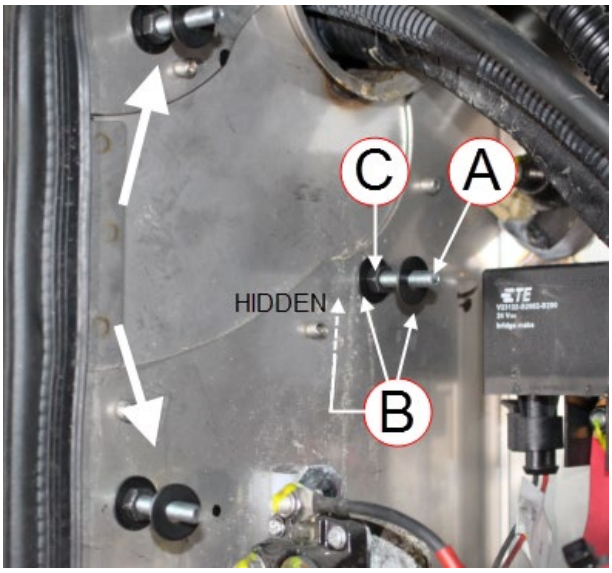

FIGURE 182

148. Install the MCM module 23499009_EFD.

D: Flanged nut #5001932 (3x)

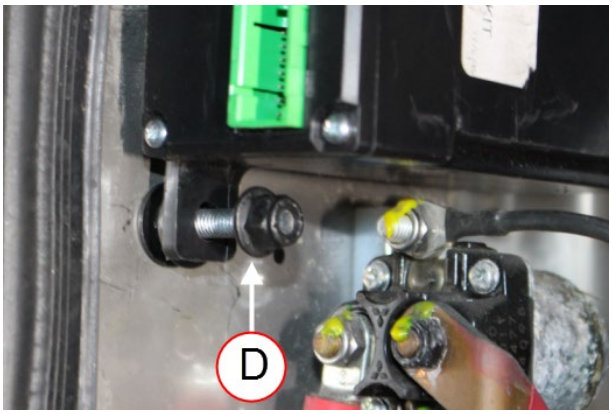

FIGURE 183

149. Cut one pieces of 4 ″ (100 mm) long of **rubber extrusion #506025**.

150. Using good industrial glue (Loctite 404 or similar product), glue the piece of rubber extrusion on the I/O module support **#**053043 as shown on the image.

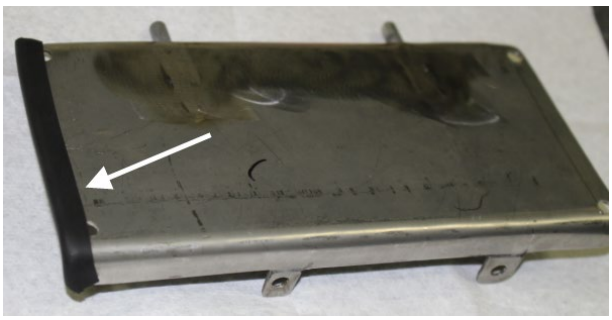

FIGURE 184

151. Use the I/O module support #053043 as a template to mark the drilling position. Drill four (4) holes as shown on the image.

Diameters:

2 holes for the rods: $^{13}/_{64}$"

2 holes for the screws: $^{1}/_{8}$"

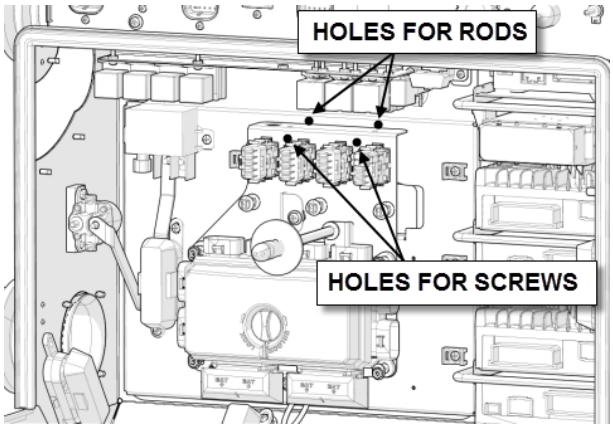

FIGURE 185

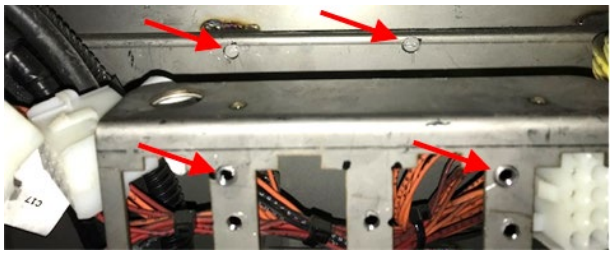

FIGURE 186

152. Install the U-shaped telltale light module bracket #381594 at an appropriate place in the electrical compartment where it can be reached by the **"fan to RJB interface"** harness #23488790. Fasten using **two (2) rivets #504379.**

153. Fix the I/O module on the support **#**053043. Secure the module using the following hardware:

- ***screw 10-24x 5/8 #5001447 (4x)***
- ***nut with nylon insert #5001180 (4x)***

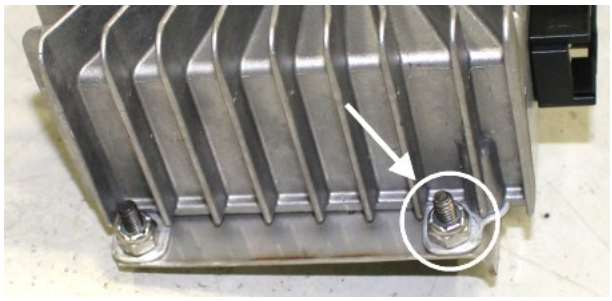

FIGURE 187

154. Install the I/O module. Secure with the following hardware:

A: screw #500623 (2x)

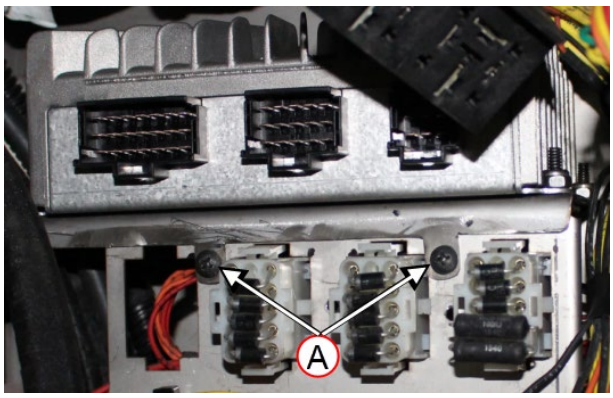

FIGURE 188

155. Place the **300A fuse #564520** (item A) in the fuse holder previously installed.

156. Connect to the lowest post of the fuse holder the two (2) following cables that are routed from the alternator and the fan drive circuit breakers box:
   - **Alternator power cable (item B)**
   - **Fan drive power cable (item C)**

   - ***item D: flat washer #5001341 (1x) & nut #5001983 (1x)***

157. Thread the nuts and tighten to a torque of 96 lbf-in (11 Nm)

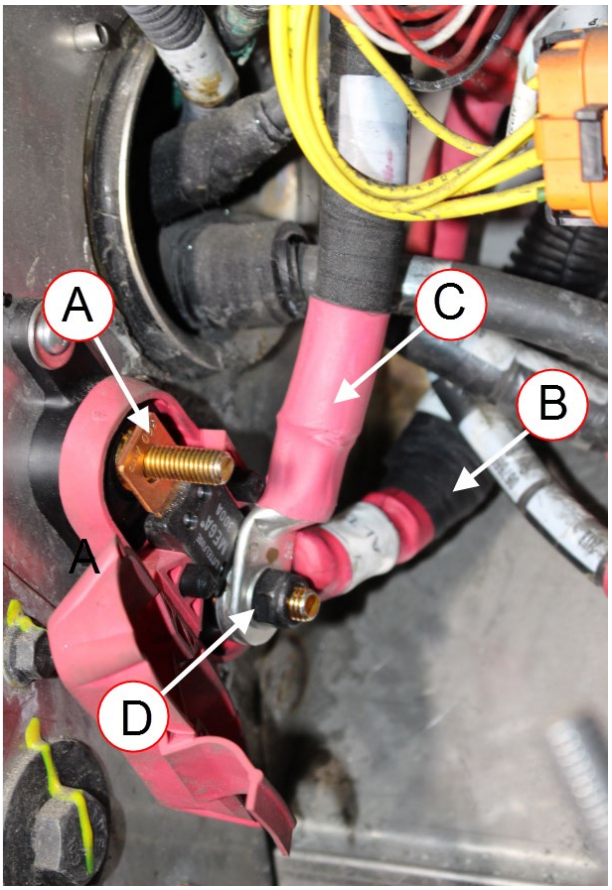

FIGURE 189

158. Connect the elbow lug of the “master relay R1 to 300A fuse” **cable #23498450** to the R1 stud identified on the image and the upper stud on the fuse holder.

   item A: flat washer #5001341 (1x) & nut #5001983 (1x)

Master relay R1- Port 30 – M10-1.5 stud nut torque: 160-195 lb-in (18-22 Nm)

Fuse holder: tighten to a torque of 96 lbf-in (11 Nm).

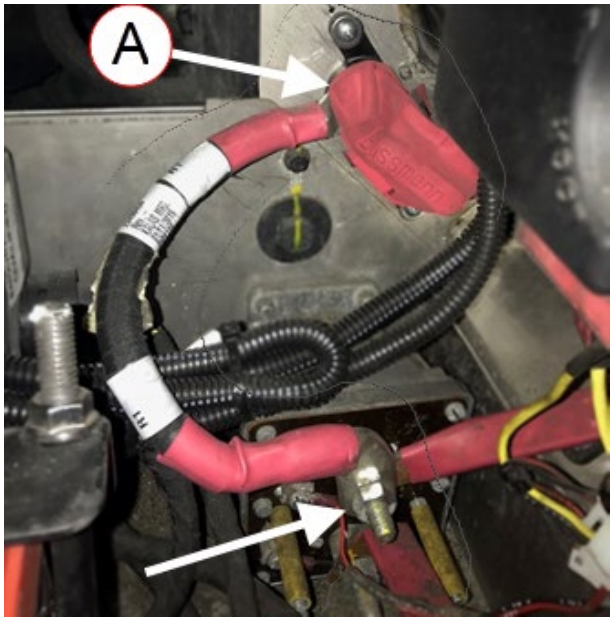

FIGURE 190

159. In the upper part of the electrical compartment, attach the cables and harnesses as shown. Use the following hardware
    - ***nylon tie #504016 (3x)***

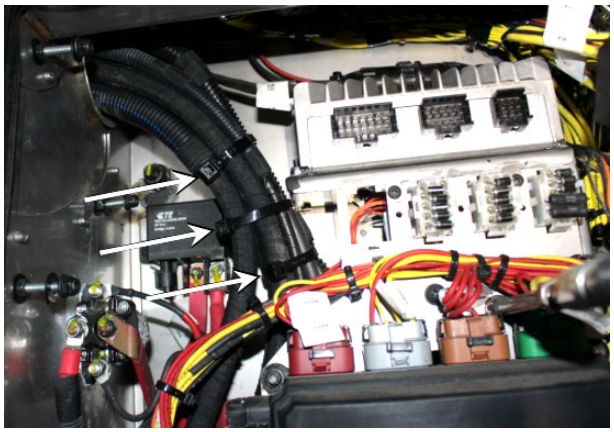

FIGURE 191

160. On harness #23490553, cut the three ring terminals and replace by three (3) terminals #561608.
161. In the main power compartment, locate connector **CCUST**.
162. Unplug the socket terminal connector of CCUST. Insert the three (3) terminals in the connector.

circuit 24VI in cavity #1
circuit 24 VD in cavity #3
ground circuit in cavity #4

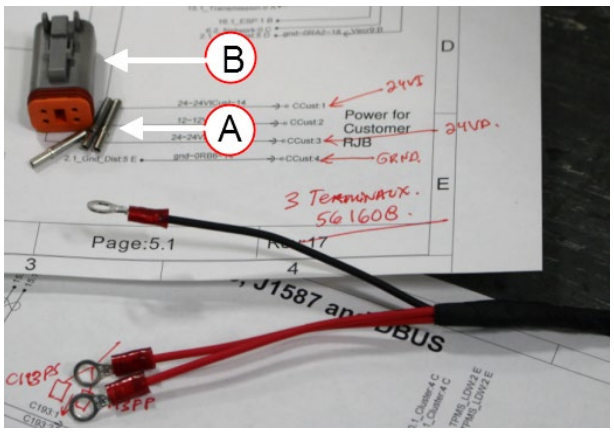

FIGURE 192

A: terminal #561608 (3x)

B: socket terminal connector of CCUST

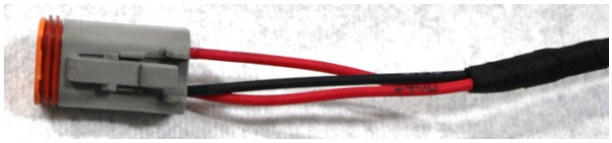

FIGURE 193

163. In the main power compartment, connect the “fan to RJB interface harness” to the “MCM to I/O-B interface harness” #23445869 by means of connector C-EFD1.
164. Connect the MCM and the I/O-B module together using the “MCM to I/O-B interface harness” #23445869.
165. Connect the OEL resistors connector **RES1F** and **RES2F** (part #563593) to the “MCM to I/O-B interface harness”. See the image at right and the following pictures for reference.

Use nylon ties as required, ideally one nylon tie every 6 ".

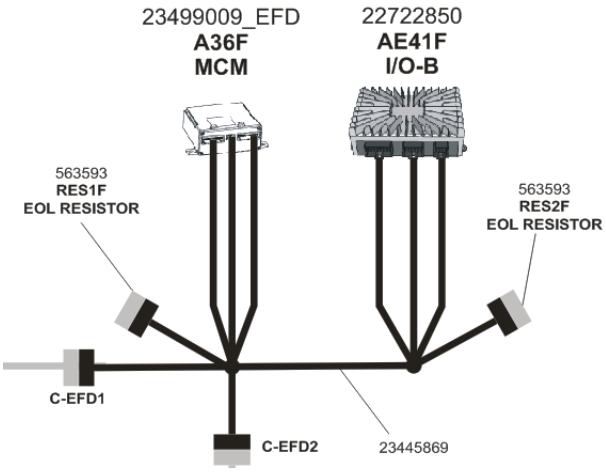

FIGURE 194

FIGURE 195

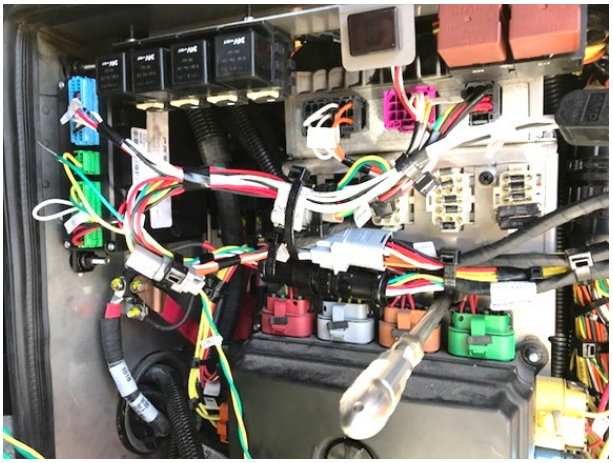

FIGURE 196

166. In the main power compartment, connect the "**vehicle interface harness" #23490553** to the "MCM to I/O-B interface harness" by means of connector C-EFD2.

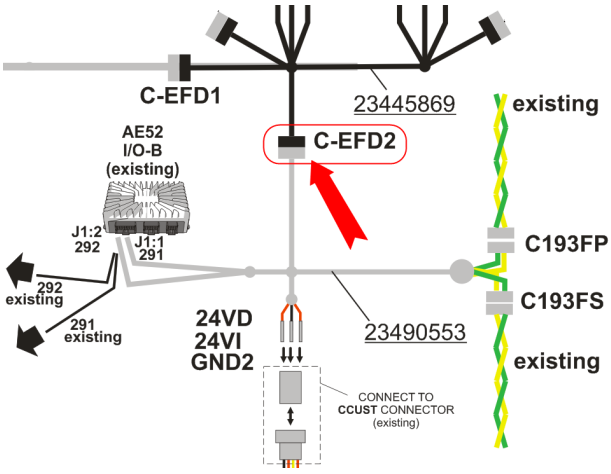

FIGURE 197

167. Plug the socket terminal connector previously installed to the CCUST existing in the main power compartment.

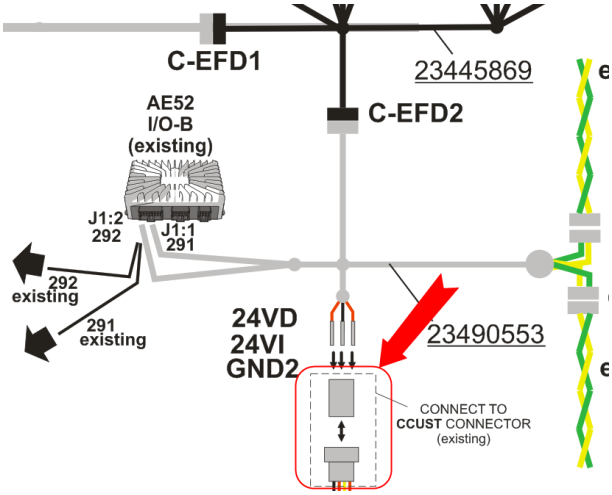

FIGURE 198

168. Get the J1939 signal. To do so, locate connector C193 among the existing harnesses of the main power compartment.

169. Disconnect connector C193 and connect with C193FS and C193FP of the "**vehicle interface harness" #23490553**.

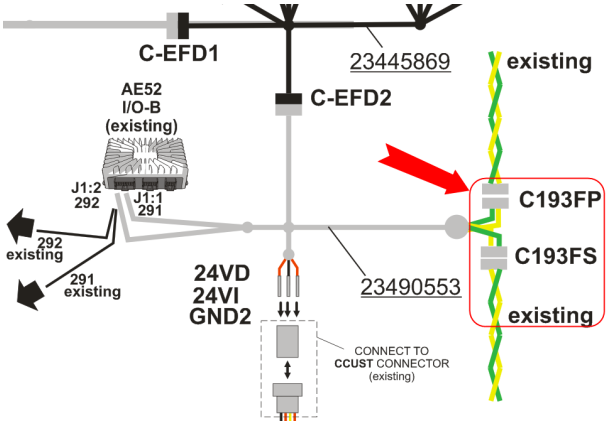

FIGURE 199

170. In the main power compartment, locate I/O-B module A52 (alternately named AE52).
171. At **A52** (or AE52), remove existing circuit 291 and 292 from connector J1:1 (pin 1) and J1:2 (pin 2).
172. For each circuit, cut the terminal and put a heat shrinking sleeve at the end of the wire. Those circuits won't be used anymore.
173. Insert circuit 291 and 292 of the "**vehicle interface harness" #23490553** into connector J1 pin 1 and J1 pin 2 respectively.

Use nylon ties as required to secure harness #23490553

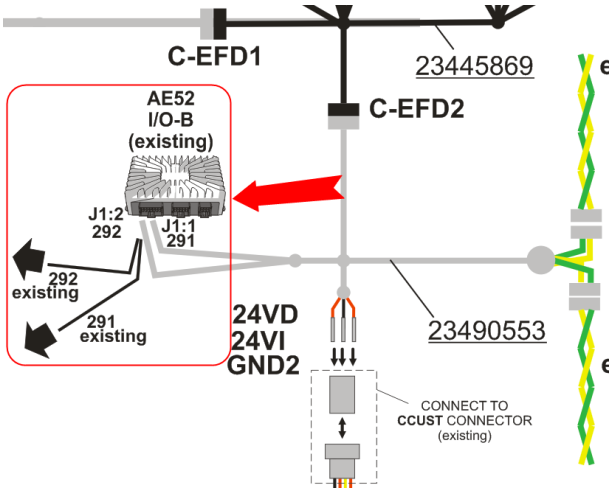

FIGURE 200

174. Install two tab terminals #561540 on the 24V red telltale light module (#830165) wires.
175. Install the telltale light module in the telltale module bracket #381594. Using a P-Touch, make a label indicating "LH ALT".
176. Connect the branch of FAN TO RJB INTERFACE HARNESS identified **ALT-L** to the telltale light module.

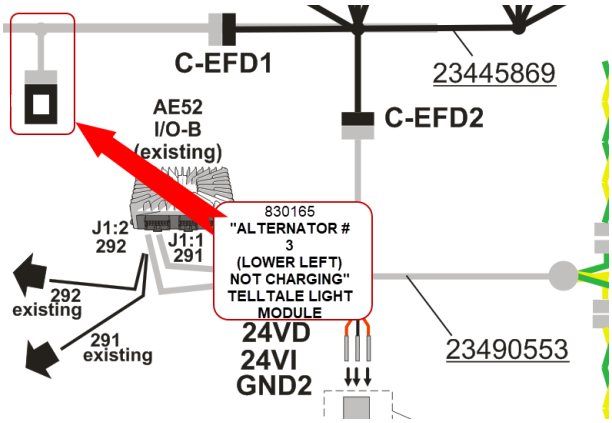

FIGURE 201

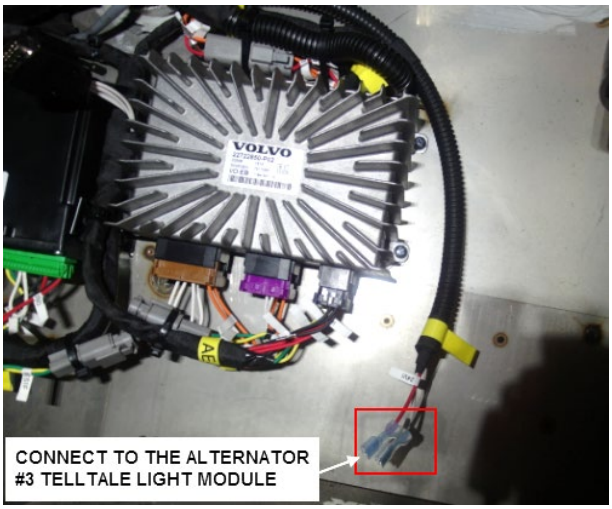

FIGURE 202

177. There are remaining nylon ties and tie mounts in the kit. Use them to secure the harnesses and cables that may seem loose. The goal is to prevent rubbing of the cables and harnesses.
178. Tighten all the nylon ties that were left loose, for example, the one between the fan circuit

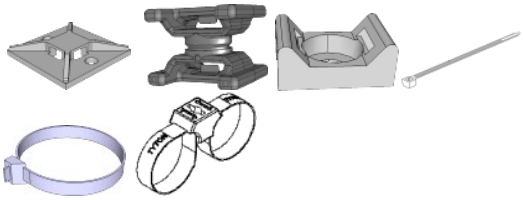

FIGURE 203

breakers box and the main power compartment.

179. Place one (1) warning decal #069205 as shown on the image.

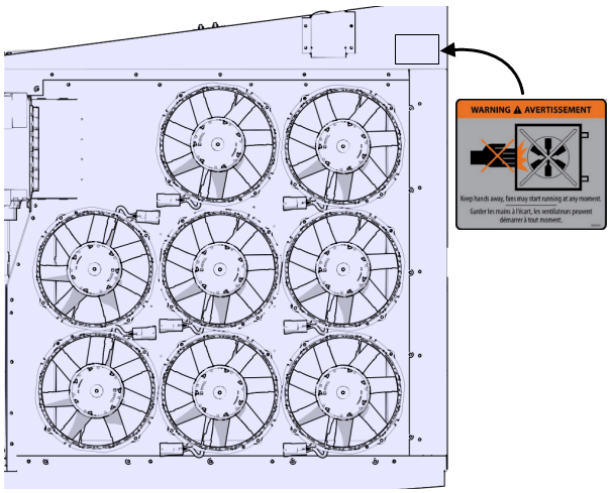

FIGURE 204

180. Install a second warning decal #069205 as shown on the radiator door.

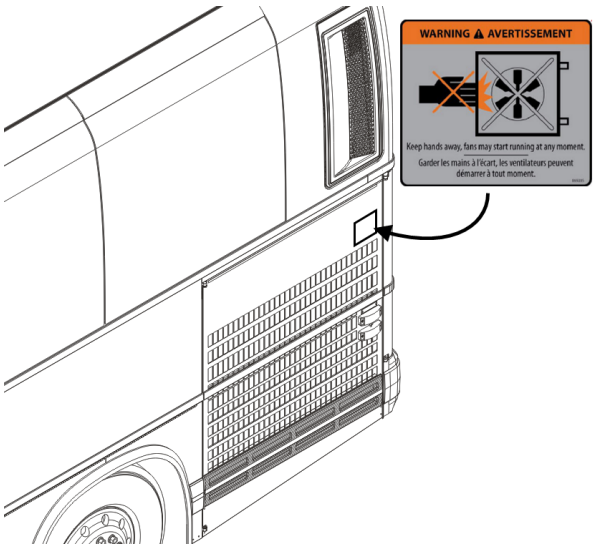

FIGURE 205

181. Fasten the radiator door **upper arm assembly**.

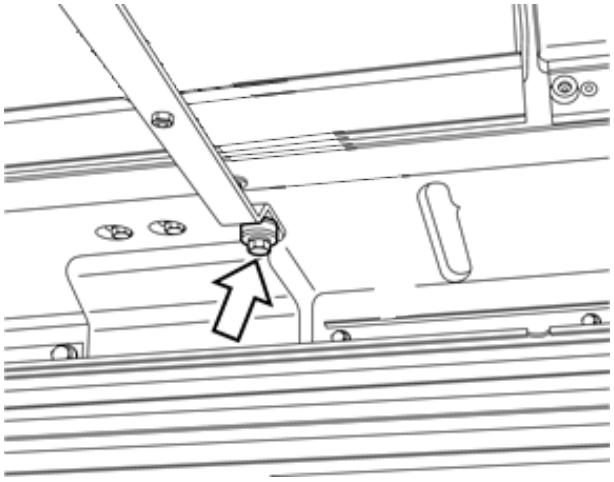

FIGURE 206

182. Refill the cooling system. Connect coolant extractor. Use coolant extractor to refill the coolant from the engine.

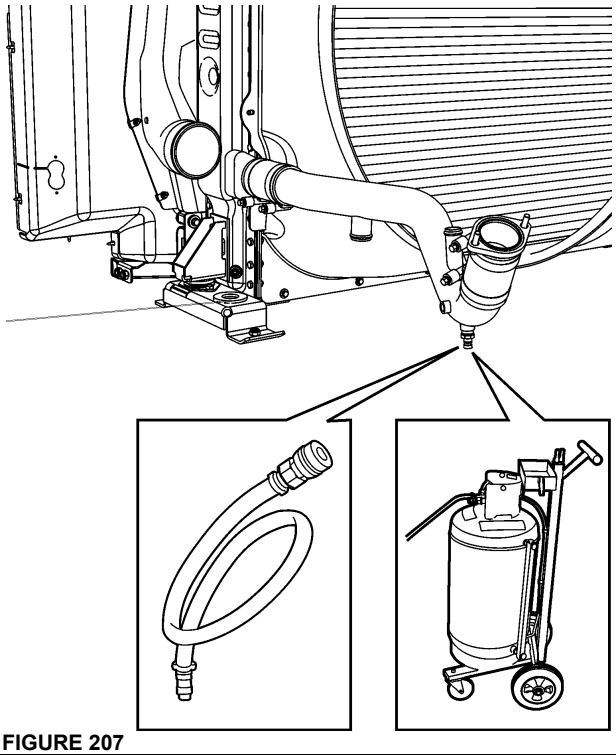

FIGURE 207

183. Reinstall the bumper.

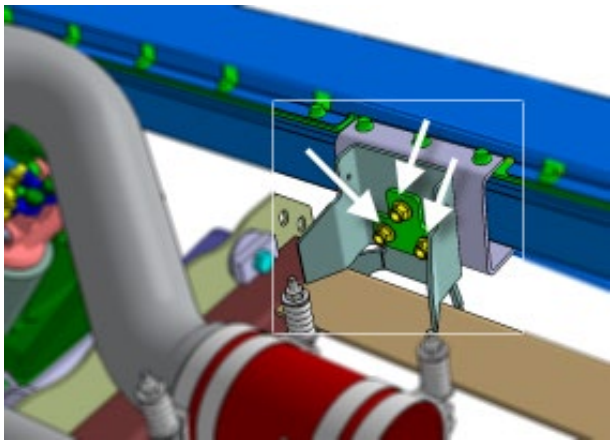

FIGURE 208

184. Reinstall the **access panel** located behind tag axle L.H. side wheel.

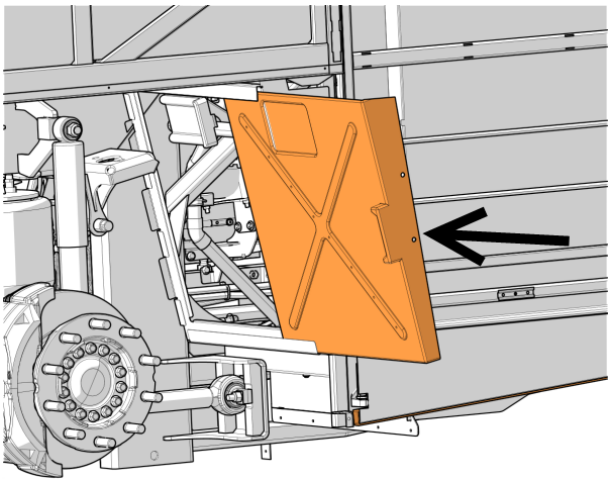

FIGURE 209

185. In the battery compartment, connect the battery ground cable to the chassis ground stud.

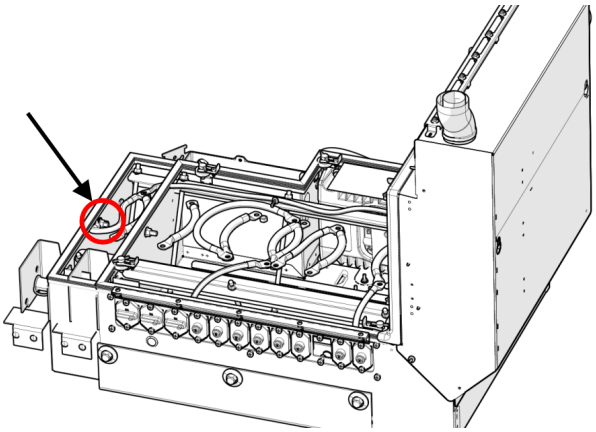

FIGURE 210

186. Set the battery master switch to the ON position.
187. Set the ignition switch to the ON position.
188. In the main power compartment, reset the circuit breakers and wait two (2) minutes for the new installer I/O-B module to be programed.

IMPORTANT NOTE

VEHICLES <u>EQUIPPED</u> WITH OPTIONAL PRIME ENERGY MANAGEMENT SYSTEM

TO PREVENT OVERLOADING THE L.H. SIDE ALTERNATOR, IT IS VERY IMPORTANT TO DISABLE « PRIME » SYSTEM ON VEHICLES RECEIVING THIS CONVERSION. PLEASE CONTACT YOUR NEAREST PREVOST SERVICE CENTER TO HAVE THE PRIME SYSTEM DISABLED.

SYSTEM TEST

189. Start the engine to idle.
190. With the engine in idle (600 rpm), use the Diagnostics menu of the Driver Information Display to engage the fans in speed 1.

Diagnostics > Vehicle Tests > Activate Radiator FAN Speed 1

The height (8) fans should run at 50% of the maximum speed. You need to evaluate the sound level and the power of the air stream to determine the speed.

191. Engage the fans in speed 2.

Diagnostics > Vehicle Tests > Activate Radiator FAN Speed 2

The eight (8) fans should run at 75% of the maximum speed.

192. Set the engine to the <u>fast idle</u>, the fans should then engage at 100% of the maximum speed.
193. If the fans behave in accordance with the criteria of the previous steps, then they operate normally.

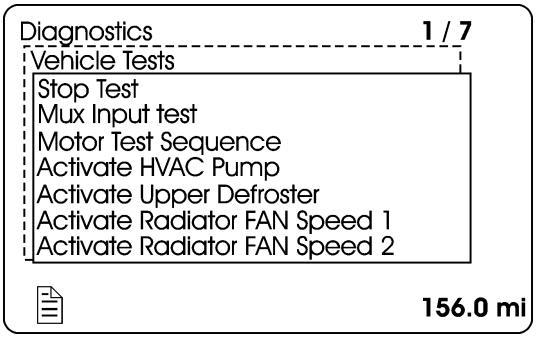

FIGURE 211

PARTS / WASTE DISPOSAL

Discard waste according to applicable environmental regulations (Municipal/State[Prov.]/ Federal)