Service Kit Bulletin

2.0 External Rocker Switch Replacement

Date: July 7, 2021
Bulletin Name: FDM-SVC-007
Model: Oshkosh S-Series
Units Affected: 2.0 Front Discharge Mixers

Purpose:

This bulletin provides instruction for replacing the original Eaton external rocker switches used to control the water system, hood lift, and Load-Span® Tag Axle (if equipped) with improved Carling switches. The Carling rocker switches offer increased protection against dust and prolonged spray.

Notice:

- This bulletin should be read and understood in its entirety before performing this procedure.
- All procedures outlined in the bulletin must be performed by skilled service personnel. Refer to the product service manual for descriptions of maintenance procedures.

SAFETY NOTICE

Perform your company's Lockout/Tagout procedure. If your company does not have a Lockout/Tagout procedure, follow OSHA 1910.147 and 1910.146 Confined Space as appropriate.

SAFETY NOTICE

Use appropriate Personal Protective Equipment (PPE) as required by your company.

Tools and Equipment Required:

Customer to supply:

- Wire cutter
- Electrical tape
- Deutsch terminal crimper

Parts Required:

Item	Part Number	Description	Qty.
SWITCH REPLACEMENT, LSTA EQUIPPED VEHICLE			
1	A000R307	SWITCH, RKR,SPDT, MOM	2
2	A000U649	SWITCH, RKR,SPDT, MOM	1
3	0128782	TERM, DEU, SOC, 16, 16-20, F	8
4	1131489	WEDGE LOCK, 3P, PLG, STD, DT	3
5	A000U646	SEALING PLUG, 16, LOCKING	1
6	2HB201	CONN, DEU, DT06-3S	3
SWITCH REPLACEMENT, NON-LSTA EQUIPPED VEHICLE			
1	A000R307	SWITCH, RKR,SPDT, MOM	1
2	A000U649	SWITCH, RKR,SPDT, MOM	1
3	0128782	TERM, DEU, SOC, 16, 16-20, F	5
4	1131489	WEDGE LOCK, 3P, PLG, STD, DT	2
5	A000U646	SEALING PLUG, 16, LOCKING	1
6	2HB201	CONN, DEU, DT06-3S	2

Procedure:

Lockout/Tagout

1. Place unit on a flat surface, block truck tires, and perform your company's Lockout/Tagout procedure. If your company does not have a Lockout/Tagout procedure, follow OSHA 1910.147 and 1910.146 Confined Space as appropriate.

2. The vehicle's BATTERY DISCONNECT switch is located on the left-hand side of the battery box. Use the battery disconnect switch when performing any maintenance so the vehicle cannot accidentally be started.

   a. Turn the battery disconnect switch (Figure A, Item 1) counterclockwise so the hole on the switch aligns with the hole in the bracket (Figure A, Item 2).

   b. Install the safety lockout device ring (Figure B, Item 1) through the holes on the battery disconnect switch and the bracket.

   c. Install a padlock (Figure B, Item 2) onto the safety lockout device ring, lock it, and put the key in your pocket. If more than one person is working on the vehicle, each person must install his or her own padlock.

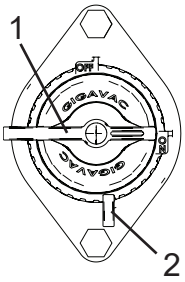

Figure A

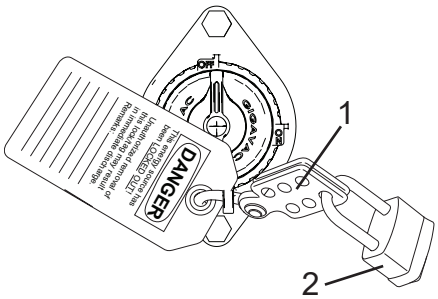

Figure B

Load-Span® Tag Axle (LSTA) Switch Installation (if equipped)

3. Remove LSTA rocker switch from left side of front pedestal, see Figure 1.

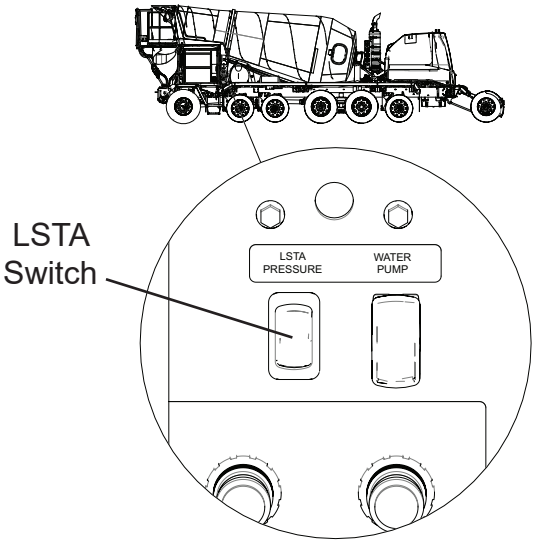

Figure 1

4. Disconnect harness connector from LSTA rocker switch. Discard rocker switch.

5. Cut LSTA switch connector off harness. Discard connector.

6. Crimp Deutsch terminals (0128782) on end of red, blue and brown harness wires, see Figure 2.
7. Insert blue wire into connector (2HB201) position A, see Figure 2.
8. Insert red wire into connector (2HB201) position B, see Figure 2.
9. Insert brown wire into connector (2HB201) position C, see Figure 2.
10. Insert wedge lock (1131489) into front of connector, see Figure 2.

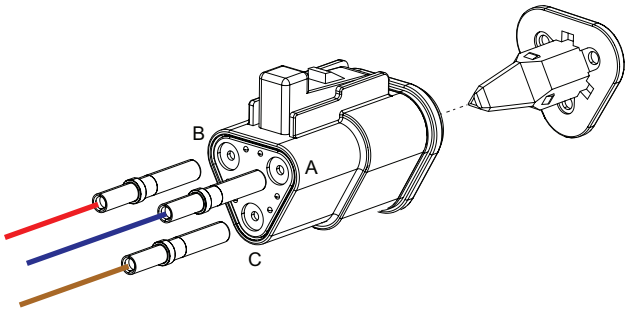

Figure 2

11. Wrap electrical tape around harness wires and harness wire loom.
12. Connect installed connector to rocker switch (A000R307) connector.
13. Install rocker switch in front pedestal, see Figure 1.

Water System Switch Installation

14. Remove water pump rocker switch from left side of front pedestal, see Figure 3.

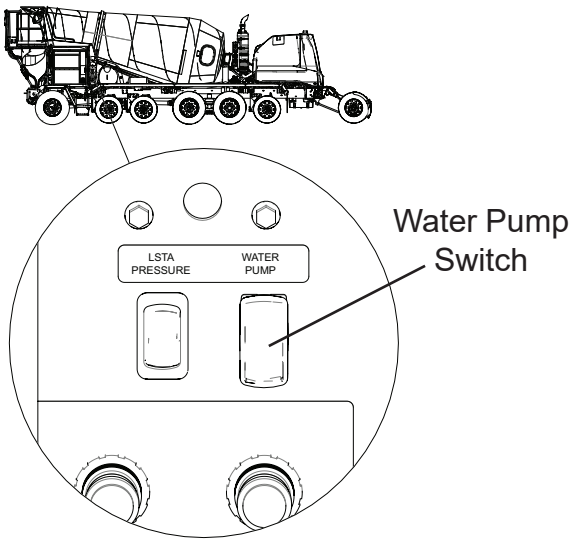

Figure 3

15. Disconnect harness connector from water pump rocker switch. Discard rocker switch.
16. Cut water pump switch connector off harness. Discard connector.

17. Crimp Deutsch terminals (0128782) on end of red and green harness wires, see Figure 4.

18. Insert green wire into connector (2HB201) position A, see Figure 4.

19. Insert red wire into connector (2HB201) position B, see Figure 4.

20. Insert cavity plug (A000U646) into connector position C, see Figure 4.

21. Insert wedge lock (1131489) into front of connector, see Figure 4.

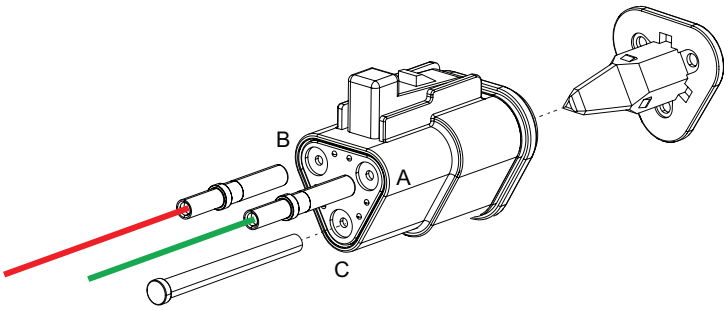

Figure 4

22. Seal end of unused violet harness wire.

23. Wrap electrical tape around harness wires and harness wire loom.

24. Connect installed connector to rocker switch (A000R307) connector.

25. Install rocker switch in front pedestal, see Figure 3.

Hood Switch Installation

26. Remove hood rocker switch from cooling package pedestal, see Figure 5.

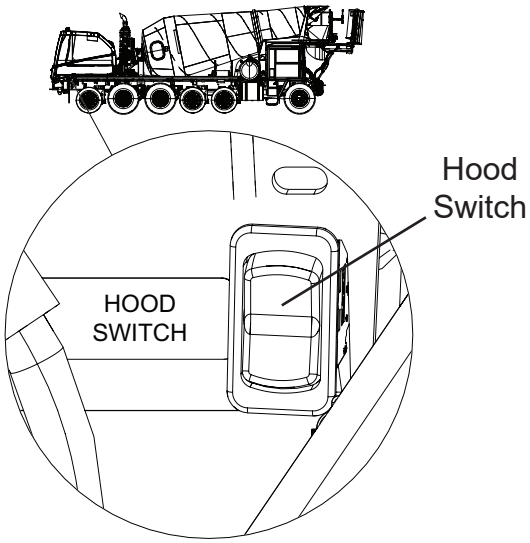

Figure 5

27. Disconnect harness connector from hood rocker switch. Discard rocker switch.

28. Cut blue, red and green wires from harness connector at connector positions 1, 2 and 3. See Figure 6.

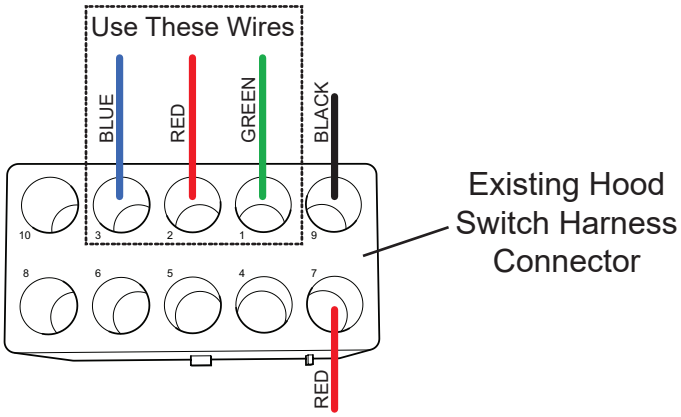

Figure 6

29. Crimp Deutsch terminals (0128782) on end of blue, red and green harness wires, see Figure 7.

30. Cut black and red wires connected to existing hood switch harness connector. Discard connector.

31. Seal end of unused red and black harness wires cut in Step 30.

32. Insert blue wire into connector (2HB201) position A, see Figure 7.

33. Insert red wire into connector (2HB201) position B, see Figure 7.

34. Insert green wire into connector (2HB201) position C, see Figure 7.

35. Insert wedge lock (1131489) into front of connector, see Figure 7.

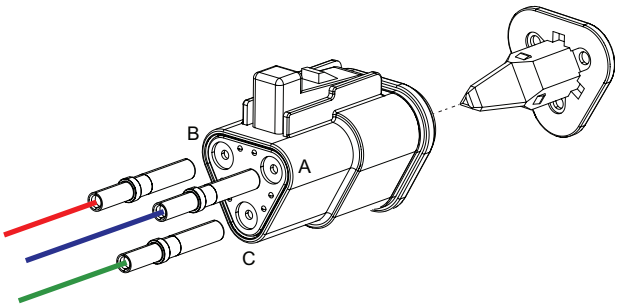

Figure 7

36. Wrap electrical tape around harness wires and harness wire loom.

37. Connect installed connector to rocker switch (A000U649) connector.

38. Install rocker switch in cooling package pedestal, Figure 5.

39. Remove lockout/tagout.

Continuous Improvement:
The change included in this document is part of the McNeilus Continuous Improvement Process.

McNeilus's quality policy is providing customer satisfaction through innovative products, dedicated service, and a constant focus on continuous improvement.

STREET SMART SERVICE BY McNEILUS

(888) 686-7278
www.streetsmartparts.com