FSB 213-002, Exhaust Rocker Compression Brake Piston, Repair

(June 2021)

For MACK CHU, CXU, GU, LEU, MRU, TD, LR, TE, PI, AN, and GR trucks built from 01/01/2007 to 07/06/2020, a repair procedure and new tools have been created to repair the exhaust rocker compression brake pistons. In some instances the exhaust rocker piston cap screw may become loose and back out causing loss of engine compression, or a mechanical injector Diagnostic Trouble Code (DTC).

There are two repair strategies outlined in this document. The first and updated repair strategy is to replace the rocker arms with updated parts. The updated rocker arms contain a welded piston cap which reduces failure rate and increases longevity of the repair. This repair strategy is to be used on all under warranty repairs.

Note: If the vehicle is out of warranty, either repair strategy is acceptable.

The second repair requires the removal of the exhaust rocker piston, removal of the exhaust rocker piston cap and internal components for cleaning. Ensure the rocker arm and exhaust rocker compression brake piston are recorded as a pair during this repair procedure for proper installation. After cleaning, the internal components are re-installed, thread locker (LOCTITE 638) is applied to the cap, and the cap is tightened with special tooling to ensure the proper torque is applied. See the repair parts section for special tooling part numbers.

Follow one of the repairs procedures outlined in this Field Service Bulletin (FSB) to repair the vehicle.

Note: This bulletin does not apply to MACK Trucks Australia.

Repair procedure

Decommissioning the Truck for Repair

You must read and understand the precautions and guidelines in Service Information, group 20, "General Safety Practices, Engine" before performing this procedure. If you are not properly trained and certified in this procedure, ask your supervisor for training before you perform it.

Note: Information is subject to change without notice. Illustrations are used for reference only and can differ slightly from the actual vehicle being serviced. However, key components addressed in this information are represented as accurately as possible.

Repair 1 – Replacing the Exhaust Rockers with updated parts.

Required Parts

Item	Description	Part Number
1	Exhaust Rockers	See impact for VIN Specific Part Number

1 Remove and replace the rocker arm as per Impact operation **2145-03-02-01** Rocker Arm, Replacement.

Repair 2 – Repairing Exhaust Rockers

Required Tools

Item	Description	Part Number
1	Retainer Tool	88800569
2	Assembly Tool	88800564

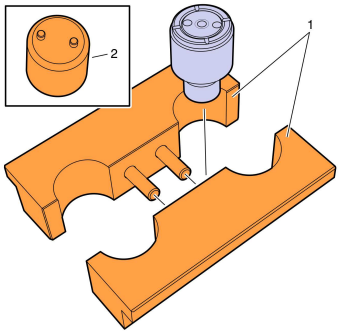

W2118926

1 Park the vehicle on a flat and level surface.
2 Apply the parking brake.
3 Place the transmission in neutral or park.
4 Chock the front wheels..

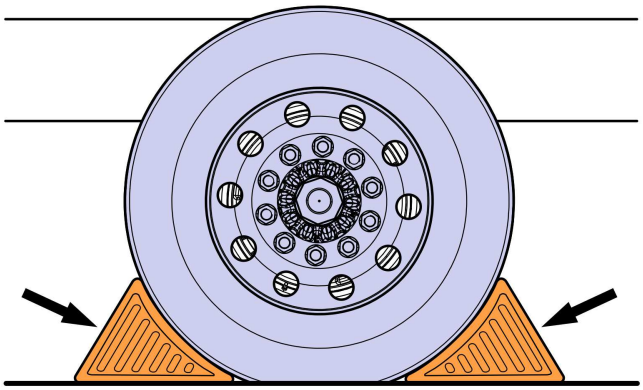

W7086748

5 Disconnect the cable from the battery's negative terminal.

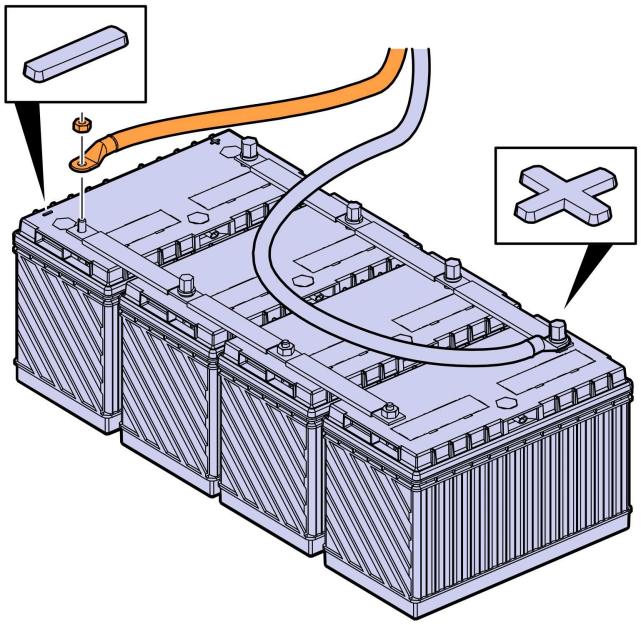

W3086747

Exhaust Rocker Compression Brake Piston Repair

Note: Do not use air impact tools for any part of this repair procedure.

1 Remove the exhaust rocker compression brake piston from the rocker arm.

Note: Record the rocker arm and the exhaust rocker compression brake piston as a matched pair for installation purposes.

2 Place the Retainer Tool (part number 88800569) in a vise as shown in the figure below.

Note: Do not secure the tool in the vise at this time.

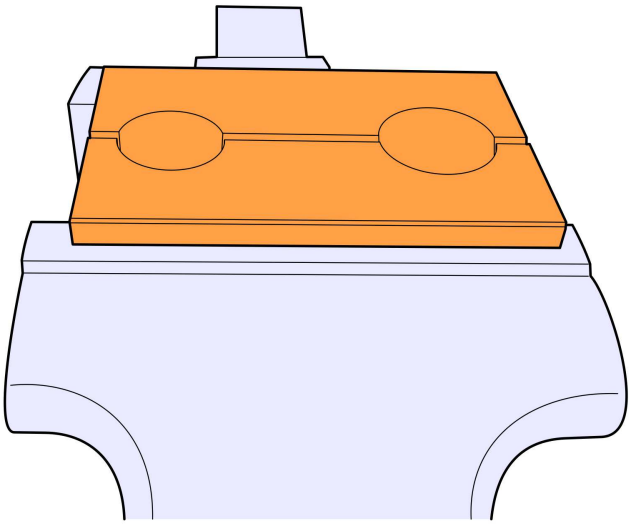

W2118927

3 Measure the diameter of the exhaust rocker compression brake piston to determine the appropriate tool opening to be used in this repair procedure.

Note: The exhaust rocker compression brake piston diameter will be dimension (A) 28 mm (1.10 in) or (B) 30 mm (1.18 in).

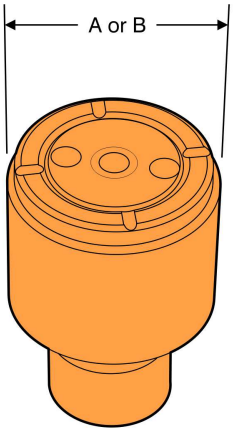

W2118928

4 Position the exhaust rocker compression brake piston in the retainer tool as shown in the figure below. The appropriate opening sizes are (A) 28 mm (1.10 in) or (B) 30 mm (1.18 in).

Note: Ensure the exhaust rocker compression brake piston protrudes approximately 6.35 mm (0.25 in) above the surface of the tool.

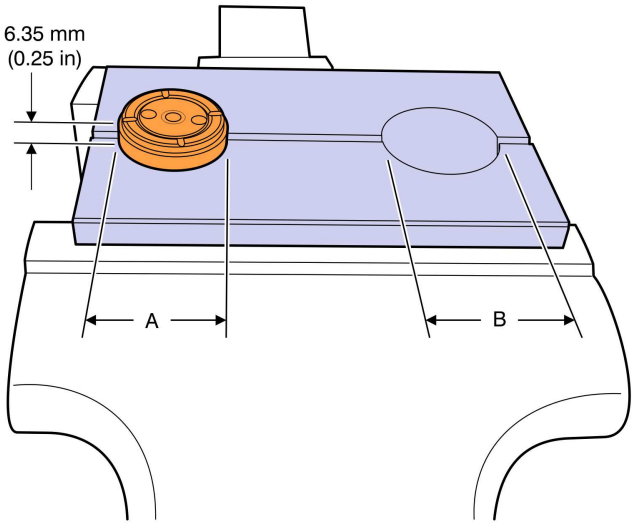

W2118929

5 Secure the exhaust rocker compression brake piston and the retainer tool in the vise.

Note: Apply enough pressure to the jaws of the vise to prevent the exhaust rocker compression brake piston from rotating inside the tool when torque is applied to the cap.

6 Using Assembly Tool (88800564) and hand tools, remove the cap from the exhaust rocker compression brake piston housing.

Note: Do not use air impact tools for this repair procedure.

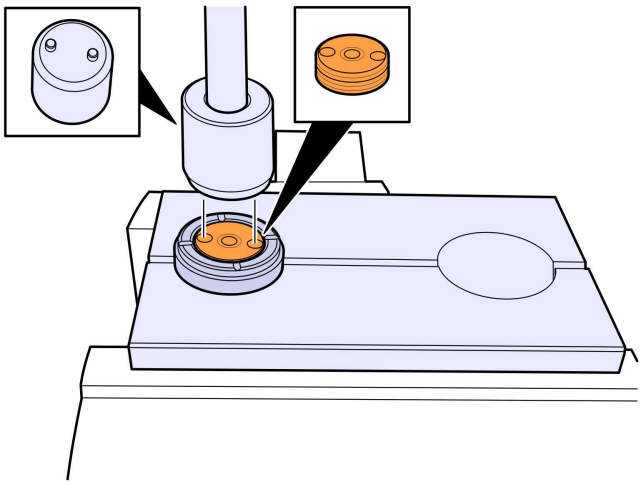

W2118930

7 Remove the internal components from the exhaust rocker compression brake piston housing.

Note: The internal components of exhaust rocker compression brake piston are very small and could be easily misplaced when the cap is removed.

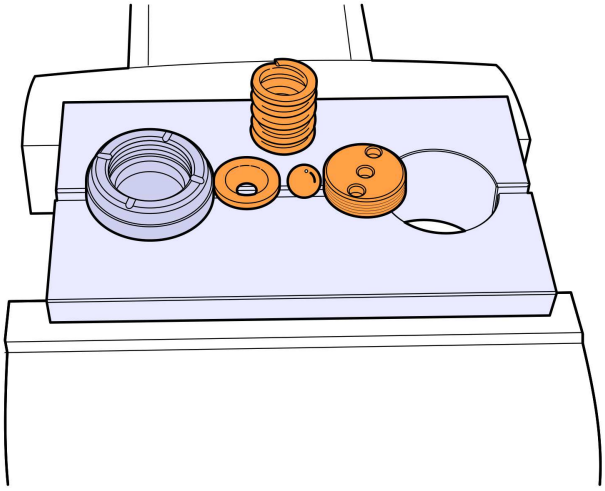

W2118931

8 Using brake cleaner, clean the internal components and the threads on the cap. Store the internal components and cap in a secure location for installation.

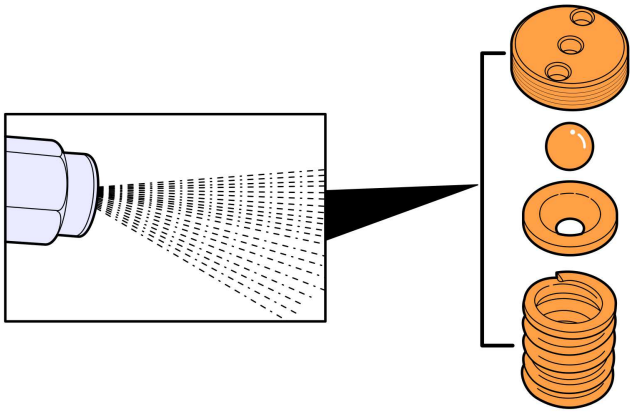

W2118932

9 Using compressed air, blow out the inside of the exhaust rocker compression brake piston housing as shown.

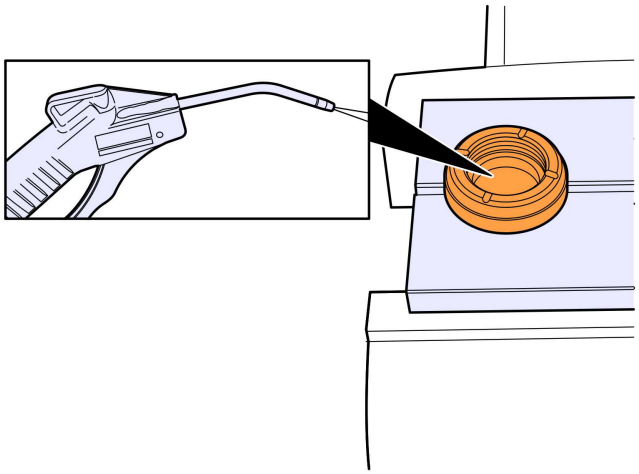

W2118934

10 Ensure the drain hole in the bottom of the exhaust rocker compression brake piston housing is clean and clear of any debris.

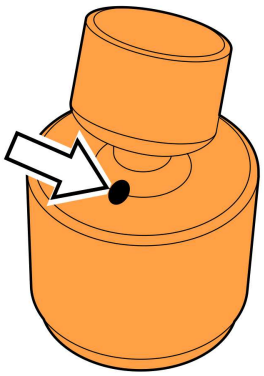

W2118933

11 Install the internal components in the exhaust rocker compression brake piston housing.

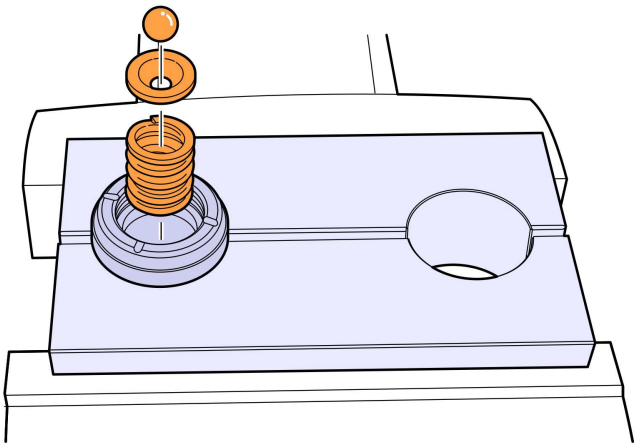

W2118935

12 Position the cap in the exhaust rocker compression brake piston housing, then rotate the cap one full turn until it starts to thread.

Note: Due to pressure from internal spring compression, slight pressure on the cap is required to ensure the cap turns smoothly in the exhaust rocker compression brake piston housing.

13 Apply one drop of thread locker (LOCTITE 270) in (4) places (90 degrees from each other) on the exhaust rocker compression brake piston cap.

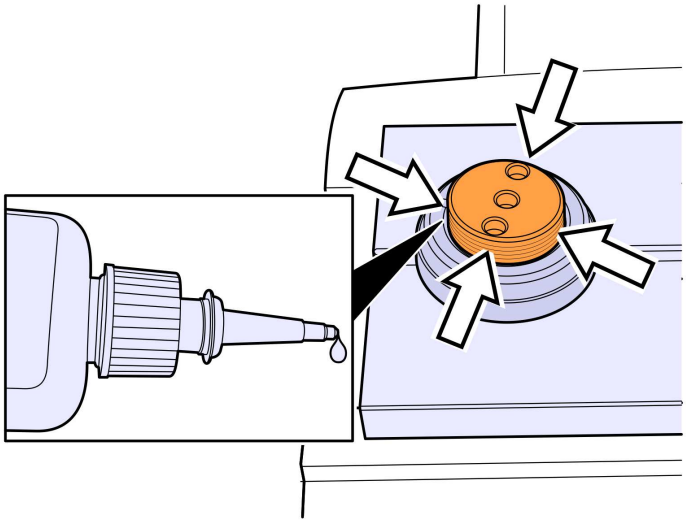

W2118936

14 Using a hand tool and Assembly Tool (88800564), tighten the cap until it bottoms out in the exhaust rocker compression brake piston housing.

Note: Use hand tools only, do not use air impact tools.

15 Using a torque wrench with Assembly Tool (88800564) tighten the cap to 30 ± 3 Nm (22 ± 2 ft-lb).

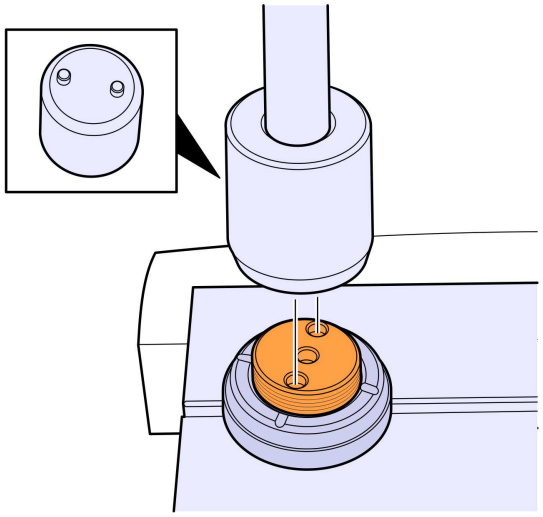

W2118937

16 Remove the exhaust rocker compression brake piston from the retainer tool.

17 Install the exhaust rocker compression brake piston in the rocker arm as previously recorded.

18 Repeat steps 2 through 17 for the remaining exhaust rocker compression brake pistons that require repair.

Commissioning the Truck for Operation

1 Connect the battery cable to the negative (ground) terminal.

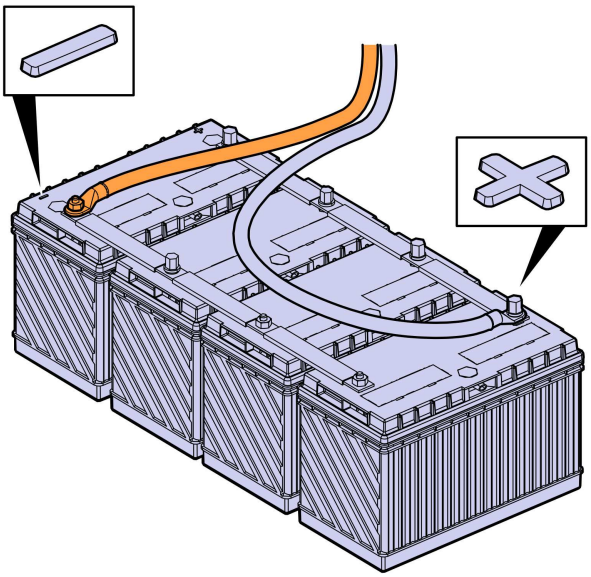

W3086758

2 Remove the wheel chocks.

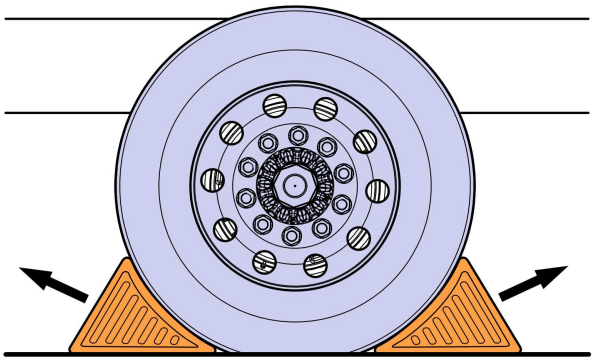

W7086759

Reimbursement

This repair may be eligible for reimbursement if a product failure was experienced within time and mileage limits of the applicable Warranty coverage. Reimbursement is obtained via the normal claim handling process.	**UCHP Reimbursement**
Claim Type (used only when uploading from the Dealer Bus. Sys.)	01
Labor Code	
Repair 1 Rocker Arm, Replacement	2145-03-02-01 Varies 4.0 to 7.0 hrs.
Repair 2 Primary Labor Code (Exhaust Rocker Compression Brake Piston, Repair), per piston	2132-16-09-01 0.2 hrs.
Causal Part	**Note:** Use the part number of your exhaust rocker to file a claim.

MACK Trucks North America reserves the right to make any changes in design or to make additions to or upon its products without incurring any obligations to install the same on vehicles previously built.