Sports Exhaust System - Silver (0P8) / Black (0P9)

Revision: This bulletin replaces bulletin Group 2 18/20, dated February 18, 2021.

Model Year: **As of 2021**

Vehicle Type: **Panamera / Panamera 4** including related **Executive** and **Sport Turismo** variants

Engine Type: **CSZ** (basic engine) = V6 / 2.9 liter with 243 kW (330 hp)

- **CSZB** with performance class **D0D** = 243 kW (330 hp)

Restrictions: **NOT** approved for Panamera Executive vehicles!

ONLY Panamera 4 Executive

Information: **Retrofitting**

Figure 1

Note: With the sports exhaust system, the signal for activating the flaps in the rear silencers comes from the respective current map in the DME control unit. The driving status and accelerator pedal position, for example, are decisive factors.

The sports exhaust system can be switched on and off separately using the Porsche Communication Management system (PCM ⇒ *Figure 1*). To do this, select the menu "Car", then "Drive" and then "Sports exhaust system".

The sports exhaust system is also active in the "SPORT" or "SPORT PLUS" driving modes.

The engine power and exhaust behavior of the vehicle are not affected.

The sports exhaust system is also available straight from the factory for new vehicles by requesting optional equipment "0P8 – Sports exhaust system (Brushed stainless steel tailpipe)" or "0P9 – Sports exhaust system (Black chrome-plated look tailpipe)".

Parts Info: **ONLY** vehicles with a short wheelbase (0E1):

971.044.231.A	⇒ Sports exhaust system – Tailpipe in Silver chrome-plated look, set
971.044.231.B	⇒ Sports exhaust system – Tailpipe in Black chrome-plated look, set

ONLY Panamera 4 Executive (0E2) with exhaust concept LEV3 (7CE):

971.044.231.C	⇒ Sports exhaust system – Tailpipe in Silver chrome-plated look, set
971.044.231.D	⇒ Sports exhaust system – Tailpipe in Black chrome-plated look, set

Parts list:

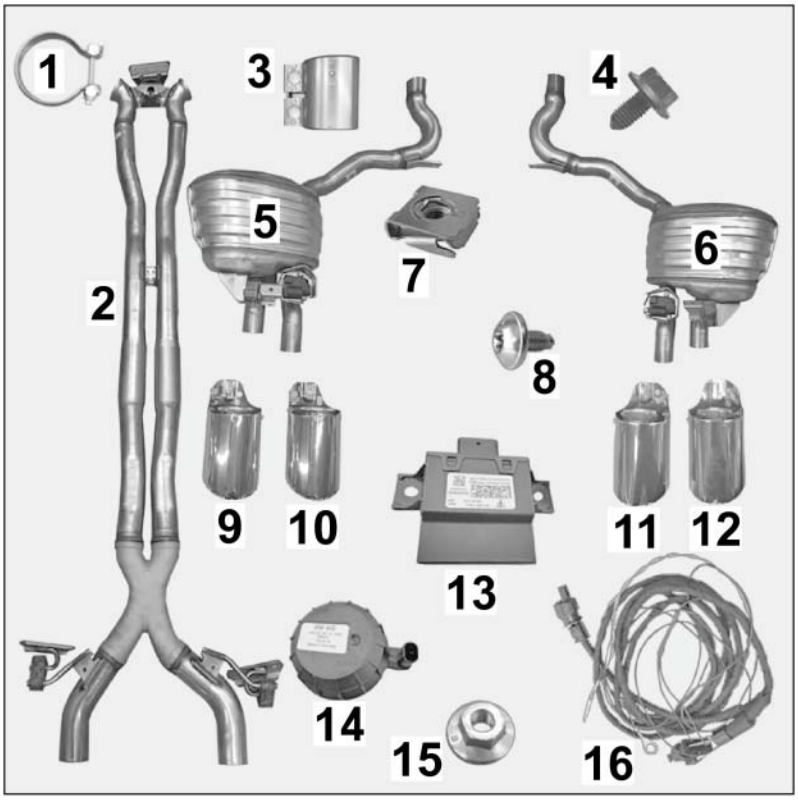

Figure 2

955.111.108.30	2 x	Clamp, ∅ 70 (front silencer/catalytic converter) ⇒ *Figure 2* **-1-**
971.253.209.CK[1]	1 x	Front silencer assembly (0E1) ⇒ *Figure 2* **-2-**
971.253.209.CL[1]	1 x	Front silencer assembly (0E2, not shown)
958.111.220.10	2 x	Clamping sleeve, ∅ 65 x 88 (front silencer/rear silencer) ⇒ *Figure 2* **-3-**
N .910.793.01	10 x	Hexagon-head bolt, M8 x 16 (exhaust system and connecting strut) ⇒ *Figure 2* **-4-**
971.253.607.AY	1 x	Rear silencer ASSY, left ⇒ *Figure 2* **-5-**
971.253.608.AY	1 x	Rear silencer ASSY, right ⇒ *Figure 2* **-6-**
N .903.425.02	4 x	Speed nut, M6 x 19.5 x 18 – VW602 49 ⇒ *Figure 2* **-7-**
999.073.594.01	4 x	Lens-head screw, M6 x 12 PA ⇒ *Figure 2* **-8-**
— — —[1]	1 x	Sports tailpipe, silver chrome-plated, outer left ⇒ *Figure 2* **-9-**
— — —[1]	1 x	Sports tailpipe, silver chrome-plated, inner left ⇒ *Figure 2* **-10-**
— — —[1]	1 x	Sports tailpipe, silver chrome-plated, inner right ⇒ *Figure 2* **-11-**
— — —[1]	1 x	Sports tailpipe, silver chrome-plated, outer right ⇒ *Figure 2* **-12-**
— — —[1]	1 x	Sports tailpipe, black chrome-plated, outer left (not shown)
— — —[1]	1 x	Sports tailpipe, black chrome-plated, inner left (not shown)
— — —[1]	1 x	Sports tailpipe, black chrome-plated, inner right (not shown)
— — —[1]	1 x	Sports tailpipe, black chrome-plated, outer right (not shown)
971.907.159.AJ	1 x	Engine noise control unit ⇒ *Figure 2* **-13-**
4H0.907.601.E	1 x	Engine noise pulse sender ⇒ *Figure 2* **-14-**
N .908.877.03	3 x	M6 hexagon nut, self-locking ⇒ *Figure 2* **-15-**
971.044.211	1 x	Wire harness assembly for engine noise control unit/pulse sender – Left-hand drive (LHD) vehicle ⇒ *Figure 2* **-16-**
999.513.052.40	15 x	Tie-wrap, 4.8 x 188 (not shown)
999.650.398.12	3 x	Cable shoe (ring eyelet), A6-1 (not shown)

[1] **ONLY** contained in respective set!

Information

ONLY in the event of repairs/replacement:
Items **WITHOUT** a part number in the parts list can be found/ordered from the Porsche Electronic Parts Catalog = PET.

Check model year and vehicle equipment (I-no.) in the standard catalog!

Materials:	000.043.172.00	1 x	Sealing cord
	— — —	1 x	Commercially available rust solvent, e.g. WD40
	— — —	1 x	Wrapping tape (commercially available)
	— — —	2 x	Auxiliary line (Tekalan or Teflon hose) approx. 1,500 mm long

Tools:

Nr.90 Pos.1 - Torque wrench
Nr.166 - Chain-type pipe cutters
VAS 6780 Body saw
Nr.155 Pos.1 - Press-out tool set
VAS 6931 Transmission and engine jack
VAS 1978/1A Crimping pliers
Nr.166-1 - Ratchet-type pipe cutters
Flashlight
9900 - PIWIS Tester 3
VAS 5908 Battery charger 90A

Assembly:

1 Preparatory work

1.1 Drive the vehicle onto a lifting platform. ⇒ *Workshop Manual '4X00IN Lifting the vehicle'*

1.2 Connect **battery charger 90A**. ⇒ *Workshop Manual '2X00IN Battery trickle charging'*

1.3 Remove cowl panel cover. ⇒ *Workshop Manual '508719 Removing and installing cowl panel cover'*

1.4 Remove wiper motor with linkage. ⇒ *Workshop Manual '921919 Removing and installing wiper linkage'*

1.5 Remove cover under dashboard. ⇒ *Workshop Manual '702219 Removing and installing cover under dashboard'*

1 – Dashboard cover
2 – Inner door sill trim (front)
3 – Diagnostic socket

1.5.1 LHD vehicles: **ONLY** left side (⇒ *Figure 5* **-1-**)

1.5.2

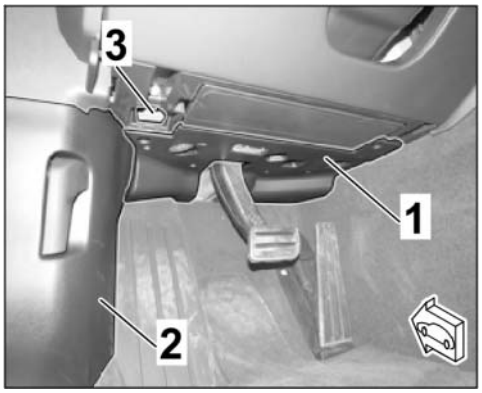

Figure 5

1.6 Remove (front) inner door sill trim. ⇒ *Workshop Manual '680519 Removing and installing (front) inner door sill trim'*

1.6.1 LHD vehicles: **ONLY** left side (⇒ *Figure 5* **-2-**)

1.7 Remove diagnostic socket (under dashboard ⇒ *Figure 6*).

1.7.1 Press locking lugs (4 x) on diagnostic socket at the same time (⇒ *Figure 6* **-A-**).

1.7.2 Pull diagnostic socket forward out of the dashboard retaining frame and remove it (⇒ *Figure 6* **-B-**).

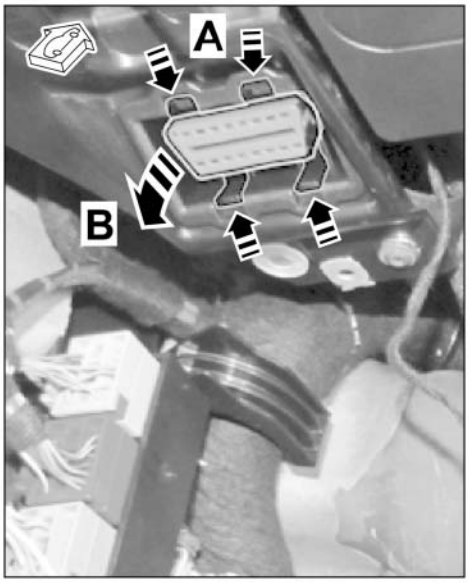

Figure 6

2 Install engine noise control unit and pulse sender

– Installation positions on LHD vehicle (⇒ *Figure 7* **-A-**)

A – LHD vehicle
1 – Engine noise pulse sender
2 – Engine noise control unit

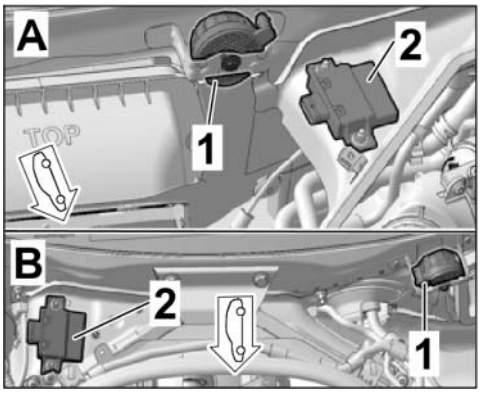

Figure 7

2.1 Position engine noise control unit on M6 studs (2 x) in the plenum panel and secure with two M6 hexagon nuts (2 x) (⇒ *Figure 7*).

Tightening torque 5 Nm (3.5 ftlb.) +/-0.75 Nm (+/-0.4 ftlb.)

2.2 Guide pin on underside of engine noise pulse sender into the bore on the holder in the plenum panel. Secure engine noise pulse sender, **facing the windscreen**, with an M6 hexagon nut (1 x) **in the** plenum panel holder (⇒ *Figure 7*).

Tightening torque 5 Nm (3.5 ftlb.) +/-0.75 Nm (+/-0.4 ftlb.)

NOTICE

Incorrect line routing

- **Risk of damage to lines and hoses**
- **Malfunction and fault memory entry on control unit**

⇒ **Avoid small bending radii when routing lines.**

⇒ **File down edges and burrs in the routing area or mask them with adhesive tape.**

⇒ **Maintain a sufficient distance from components exposed to high temperatures while driving.**

2.3 Route electric wire harness in the plenum panel to the passenger compartment.

Electric wire harness connections (⇒ *Figure 8*):

1 – Engine noise pulse sender connector (2-pin)
2 – Engine noise control unit connector (6-pin)
3 – Cable shoe (ring eyelet), A6 (ground)
4 – Double connector lines (power supply)
5 – 2-pin connector (CAN bus)

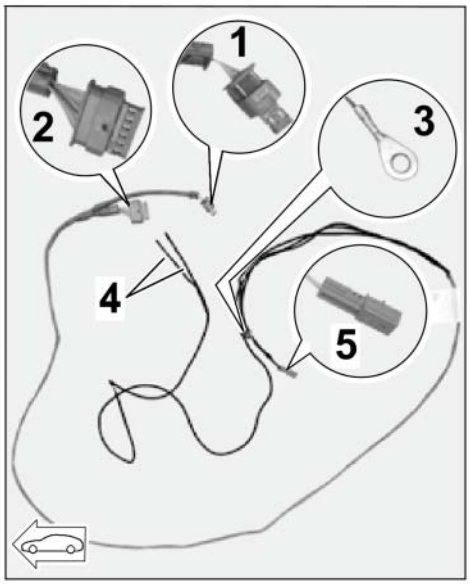

Figure 8

2.3.1 Connect electric plug connections for engine noise pulse sender (2-pin) and for engine noise control unit (6-pin) (⇒ *Figure 9*).

1 – Engine noise pulse sender
2 – Pulse sender holder
3 – Line for engine noise pulse sender
4 – Engine noise control unit
A – incorrect line routing
B – correct line routing

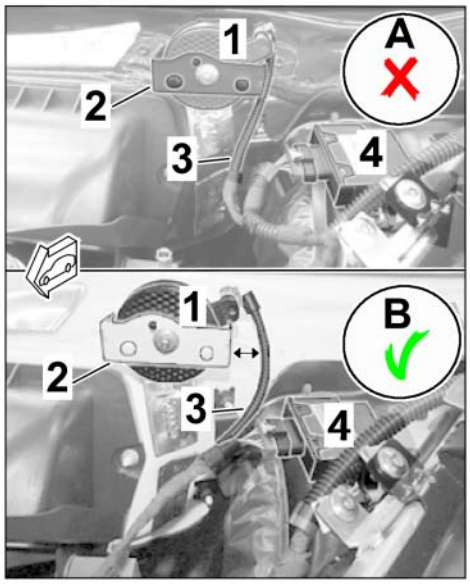

Figure 9

Information
Check that the electric line for the plug connection for the engine noise pulse sender is routed correctly.

- The line must **NOT** be touching the engine noise pulse sender holder (on the body side)!
- Route the line differently if necessary and use a tie-wrap to secure the line to existing lines or holders without tensile stress and so that no chafing or rattling occurs.

2.3.2 Route electric wire harness as follows to the passenger compartment:

LHD vehicle (⇒ *Figure 10*):

1 – Pulse sender
2 – Control unit
3 – Electric wire harness
4 – Dome strut
5 – Brake booster
6 – Grommet on bulkhead (left side)

Pulse sender → control unit → above dome strut (along wire harness) → underneath brake booster → grommet on bulkhead (left side)

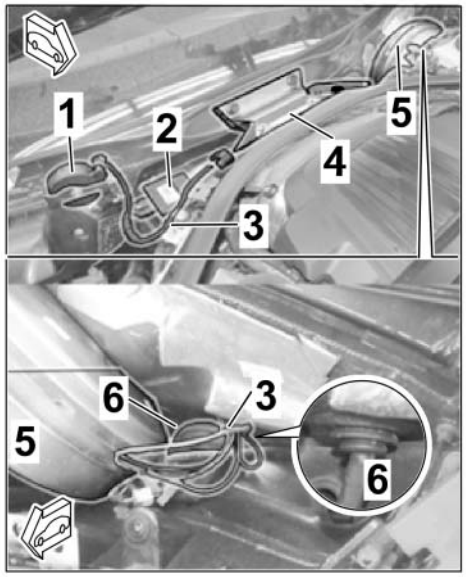

Figure 10

2.3.3 Remove grommet on bulkhead (LHD vehicle: left side ⇒ *Figure 12*

1 – Grommet on bulkhead (left side)
2 – Electric wire harness
3 – Brake booster

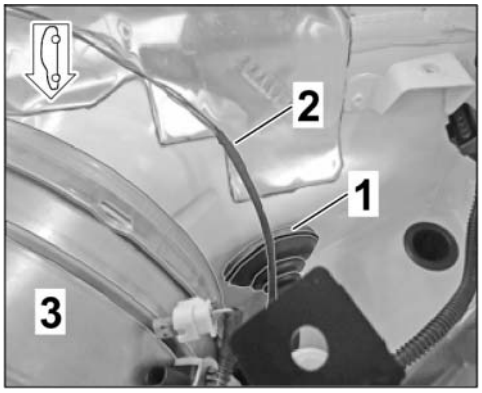

Figure 12

2.3.4 Remove pin contact (2 x) from connector housing for CAN bus (2-pin) electric wire harness:

1 – Chamber 1
2 – Chamber 2

- Release (2-pin) connector housing for CAN bus (⇒ *Figure 13* **-A and B-**).
- Press lightly on retaining spring on the pin contact (⇒ *Figure 13* **-C-**) and pull line with pin contact out of the connector housing slightly at the same time (⇒ *Figure 13* **-D-**).
- You may have to do this a second time because of the housing bar (⇒ *Figure 13* **-E and F-**).
- Repeat Steps A to F on the second pin contact.

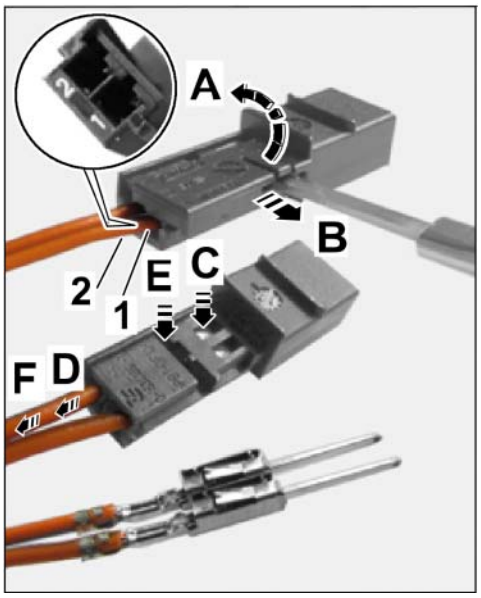

Figure 13

2.3.5 Wind wrapping tape around both pin contacts.

2.3.6 Cut off cable shoe (ring eyelet) A6 on BN 0.5² line (ground) if necessary. Carefully guide electric wire harness through the grommet.

2.3.7 Install grommet in bulkhead and seal inside and outside (⇒ *Figure 14*) with sealing cord.

1 – Grommet
2 – Sealing cord
3 – Electric wire harness

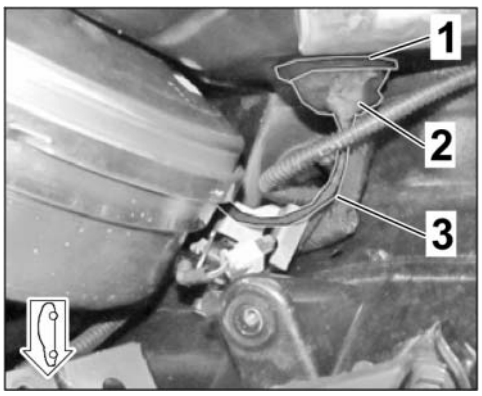

Figure 14

2.3.8 Install pin contact (2 x) in connector housing for CAN bus (2-pin):

- Connect CAN drive LOW / OG/BN / 0.35² line in chamber 1.
- Connect CAN drive HIGH / OG/BU / 0.35² line in chamber 2.
- Lock (2-pin) connector housing.

2.3.9 Crimp new cable shoe (ring eyelet) A6 on BN 0.5² line (ground) if necessary.

2.4 Route and connect electric wire harness in the passenger compartment.

– Line routing on **LHD vehicle** (⇒ *Figure 15*):

1 – Ground pin for left A-pillar
2 – Diagnostic socket
3 – 2-pin connector

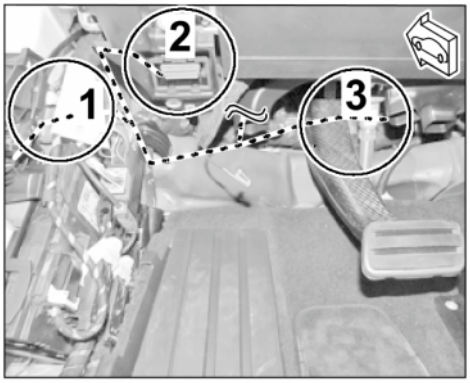

Figure 15

Function / line:	**Connection point - LHD vehicle**
Ground Terminal 31 = BN; 0.5²	Ground pin for left A-pillar (MB11, 639.1)
Power supply Terminal 15 = BK; 0.5²	Diagnostic socket, double connector on line 112 (chamber 1, terminal 15 = RD/YE; 0.5²)
Control CAN drive LOW = OG/BN; 0.35²	2-pin connector, chamber 1 (connection point underneath dashboard – left side)
Control CAN drive HIGH = OG/BU; 0.35²	2-pin connector, chamber 2 (connection point underneath dashboard – left side)

2.4.1 BN 0.5² line (ground)

1 – BN 0.5² line
2 – Ground pin (LHD)

- Route BN 0.5² line (ground) to the ground pin of the relevant A-pillar.
- Install cable shoe (ring eyelet) A6 on the ground pin (⇒ *Figure 17*).

Tightening torque 9 Nm (6.5 ftlb.)

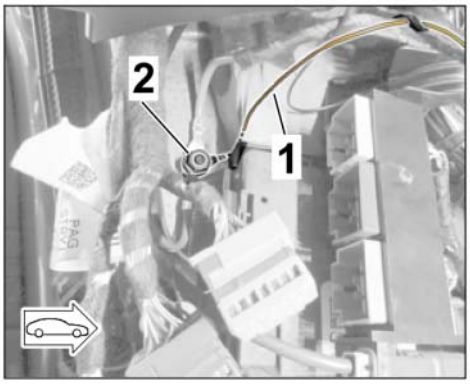

Figure 17

2.4.2 BK 0.5² line (power supply)

1 – Diagnostic socket
2 – Line 112 RD/YE; 0.5²
3 – Socket
4 – BK 0.5² line
5 – Crimp connector

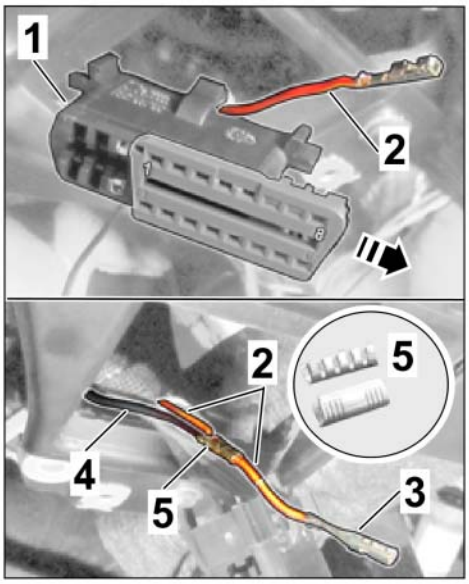

Figure 18

- Route BK 0.5² line to the diagnostic socket.
- Cut off one BK 0.5² line at the Y-splice and seal with shrink-fit hose.
- Release diagnostic socket and remove line 112 RD/YE 0.5² from chamber 1 (⇒*Figure 18* **-top-**).
- Remove insulation on line 112 RD/YE 0.5² approx. 2 cm from the socket.
- Crimp BK 0.5² line to line 112 RD/YE 0.5² in the insulated area using a crimp connector (⇒*Figure 18* **-bottom-**).
- Slide shrink-fit hose over line 112 RD/YE 0.5² and seal crimp connection.
- Install socket in chamber 1 of the diagnostic socket and lock diagnostic socket.
- Install diagnostic socket under the dashboard.

2.4.3 Connector (2-pin, with OG/BN and OG/BU line) for CAN bus

– Connection point in LHD vehicle (⇒ *Figure 19*):

1 – Socket (2-pin)
2 – Steering column
3 – Wiring duct
4 – Plug connection (2-pin)

Work on LHD:

- Expose (2-pin) socket underneath the dashboard (LHD: in steering column area ⇒ *Figure 18*
- Route OG/BN and OG/BU lines with (2-pin) connector to (2-pin) socket.
- Connect (2-pin) plug connection (⇒ *Figure 19* **-4-** and ⇒ **-4-**).

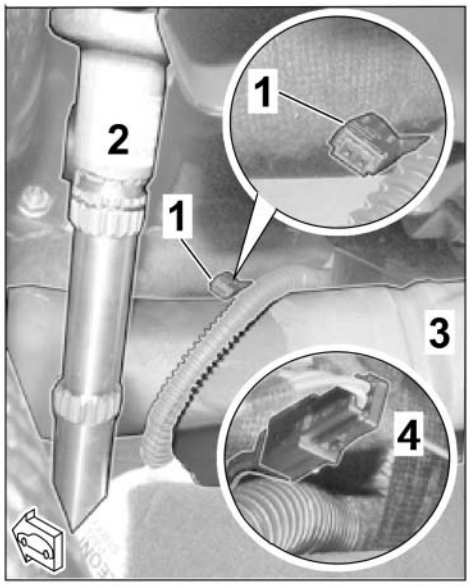

Figure 19

NOTICE

Incorrect line routing

- **Risk of damage to lines and hoses**
- **Malfunction and fault memory entry on control unit**

⇒ **Avoid small bending radii when routing lines.**

⇒ **File down edges and burrs in the routing area or mask them with adhesive tape.**

⇒ **Maintain a sufficient distance from components exposed to high temperatures while driving.**

2.4.4 Secure electric wire harness in the passenger compartment to existing lines/components with tie-wraps without tensile stress and so that no chafing occurs.

2.5 Concluding work – electrics

2.5.1 Install (front) inner door sill trim. ⇒ *Workshop Manual '680519 Removing and installing (front) inner door sill trim'*

2.5.2 Install cover under dashboard. ⇒ *Workshop Manual '702219 Removing and installing cover under dashboard'*

2.5.3 Install wiper motor with linkage. ⇒ *Workshop Manual '921919 Removing and installing wiper linkage'*

2.5.4 Install cowl panel cover. ⇒ *Workshop Manual '508719 Removing and installing cowl panel cover'*

CAUTION

Hot components

- **Risk of burns**

⇒ **Let hot components cool down.**

⇒ **Wear personal protective gear.**

3 Install new exhaust system

3.1 Remove standard front silencer

3.1.1 Remove tunnel cover on –center–underbody (⇒ *Figure 21* **-1-**) and detach center underbody cover at the left/right side. ⇒ *Workshop Manual '519319 Removing and installing cover for centre underbody'*

1 – Tunnel cover on –center–underbody
2 – Tunnel strut

3.1.2 Remove tunnel strut (10 x hexagon-head bolts, M10 x 45 ⇒ *Figure 21* **-2-**). ⇒ *Workshop Manual '260119 Removing and installing exhaust system'*

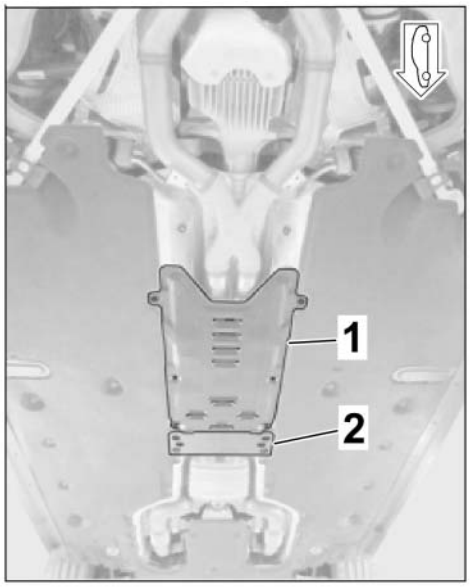

Figure 21

3.1.3 **Engine and gearbox jack** must be positioned under the front silencer. Then secure the front silencer with belts to prevent it from falling down.

3.1.4 Cut rear silencer at the connection point for the front silencer (marking on underside) using pipe cutters or **body saw** (⇒ *Figure 22*).

1 – Installation position of strut
2 – Disconnection point
3 – **Body saw**
4 – Multiple-tooth countersunk screw, M8 x 20 (rear-end cross strut)

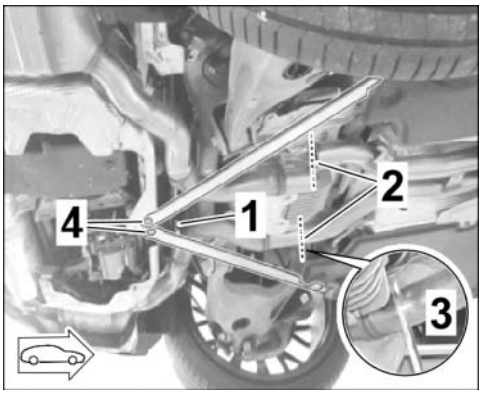

Figure 22

3.1.5 Loosen clamp (2 x) between front silencer and catalytic converter decoupling element (left/right).

3.1.6 Secure decoupling element (left/right) to the transmission support with a tie-wrap/wire to prevent it from folding down (⇒ *Figure 23*).

1 – Decoupling element (left/right)
2 – Tie-wrap/wire
3 – Transmission support

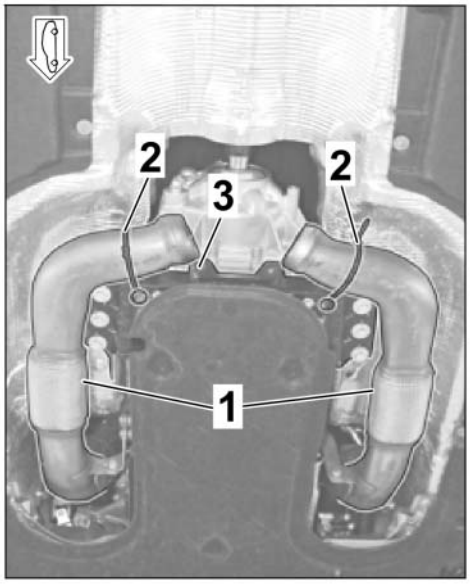

Figure 23

3.1.7 Remove hexagon-head bolt (M8 x 16; 2 x) on the front holder (transmission bridge) and hexagon-head bolt (M8 x 16; 4 x) on –center– front silencer assembly mount

3.1.8 Remove front silencer assembly by pulling it downwards.

3.2 Remove standard tailpipes (⇒ *Figure 24 (Panamera Turbo)*). ⇒ *Workshop Manual '263519 Removing and installing tailpipe cover'*

1 – Standard tailpipes – right-hand side
2 – Lens-head screw, M6 x 12
3 – Speed nut, M6 x 19.5 x 18 – VW602 49

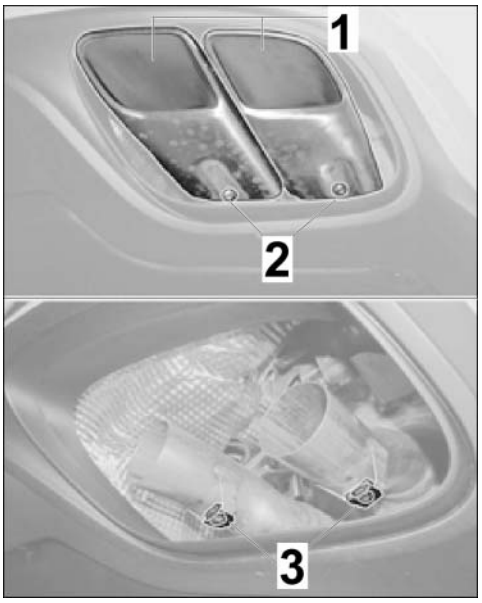

Figure 24 (Panamera Turbo)

3.3 Remove standard rear silencers. ⇒ *Workshop Manual '263319 Removing and installing rear silencer'*

3.3.1 Remove rear underbody cover. ⇒ *Workshop Manual '519419 Removing and installing cover for rear underbody'*

3.3.2 Remove hexagon-head bolt (M8 x 16, 2 x) on strut between the rear silencers (⇒ *Figure 25* **-1-**) and remove strut.

1 – Installation position of strut
2 – Disconnection point
3 – **Body saw**
4 – Multiple-tooth countersunk screw, M8 x 20 (rear-end cross strut)

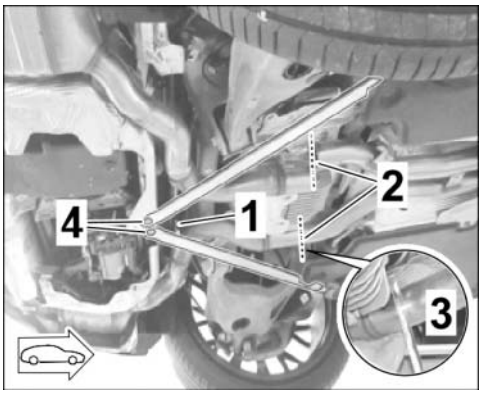

Figure 25

3.3.3 Release and disconnect plug connection for exhaust flap actuator (rear silencer at the left/right).

3.3.4 Remove hexagon-head bolts (M8 x 20, 2 x) on rear-end cross strut (⇒ *Figure 25* **-4-**). ⇒ *Workshop Manual '421319 Removing and installing rear-axle chassis subframe struts'*

3.3.5 Remove hexagon-head bolt (M8 x 16) on rear silencer holder at the rear (left/right).

3.3.6 Remove rear silencers (at the left/right).

3.4 Install new rear silencers (left/right). ⇒ *Workshop Manual '263319 Removing and installing rear silencer'*

3.4.1 Install new speed nut (M6 x 19.5 x 18 – VW602 49, 2 x) on holders on exhaust pipes of new rear silencers (left/right ⇒ *Figure 26*).

1 – Speed nut, M6 x 19.5 x 18 – VW602 49
2 – Holder on rear silencer exhaust pipes (right)

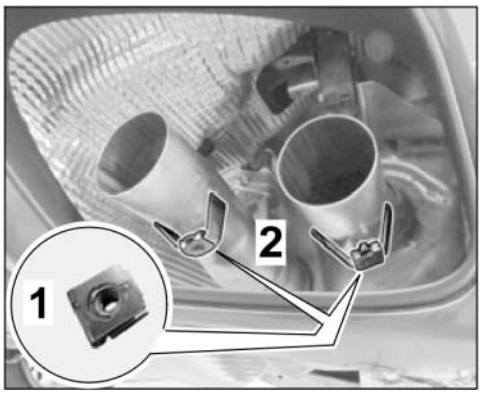

Figure 26

3.4.2 Lift new rear silencers (left/right) into installation position and secure to the body using a hexagon-head bolt (M8 x 16, 1 x).

Tightening torque 23 Nm (17 ftlb.)

3.4.3 Connect plug connection for exhaust flap actuator (rear silencer at the left/right).

3.4.4 Install new clamping sleeve, ∅ 65 x 88 (2 x) on inlet pipe for rear silencer (at the left/right).

3.5 Install new front silencer. ⇒ *Workshop Manual '260119 Removing and installing exhaust system'*

3.5.1 Position new clamp, ∅ 70 (2 x) on catalytic converter decoupling element (at the left/right).

3.5.2 Secure new front silencer on **engine and gearbox jack** with belts and move it into installation position.

3.5.3 Remove securing aids from catalytic converter decoupling element (at the left/right). Loosely pre-fit catalytic converter decoupling element on the front silencer using a new clamp, ∅ 70 (2 x).

3.5.4 Align clamping sleeve (∅ 65 x 88, 2 x) on exhaust pipe on front silencer/rear silencer (at the left/right) so that the clamping sleeve is not touching/rubbing at any point (⇒ *Figure 27*).

1 – Clamping sleeve
2 – Hexagon nut M8

Loosely pre-fit clamping sleeve, ∅ 65 x 88 (2 x).

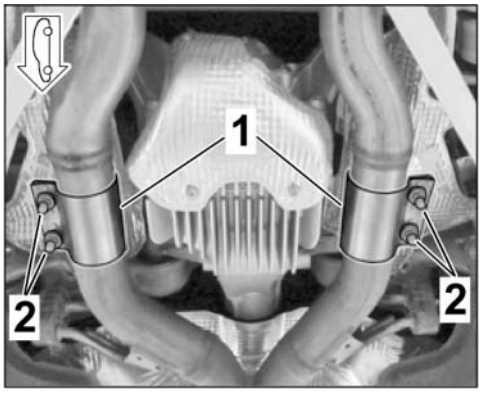

Figure 27

3.5.5 Secure holder at front of front silencer to transmission support using hexagon-head bolts, M8 x 16 (2 x).

Tightening torque 23 Nm (17ftlb.)

3.5.6 Secure clamp, ∅ 70 (2 x) on catalytic converter decoupling element (at the left/right).

Tightening torque 35 Nm (26 ftlb.)

3.5.7 Secure –center– front silencer mount to the body using hexagon-head bolts, M8 x 16 (4 x).

Tightening torque 23 Nm (17 ftlb.)

3.5.8 Secure clamping sleeve (∅ 65 x 88, 2 x) on the front silencer/rear silencer (at the left/right).

Tightening torque 33 Nm (24 ftlb.)

3.5.9 Tighten multiple-tooth countersunk screws (M8 x 20, 2 x) on rear-end cross strut.
⇒ *Workshop Manual '421319 Removing and installing rear-axle chassis subframe struts'*

Tightening torque 20 Nm (15 ftlb.)

3.5.10 Loosely pre-fit strut between the rear silencers using hexagon-head bolts (M8 x 16, 2 x).

3.6 Installing sports tailpipe

3.6.1 Slide the new sports tailpipes onto the relevant rear silencer stub pipes as far as the screw point and preassemble by installing a new M6 x 12 lens-head screw **hand-tight**.

Information

If the sports tailpipes have to be moved to the right or left, this can only be performed via the connecting strut between the rear mufflers (see also: ⇒ *Workshop Manual '263319 Removing and installing rear muffler'*).

3.6.2 Check that the gap = “dimension Z” between the new sports tailpipes and exhaust system cover (rear apron – left and right side of vehicle ⇒ *Figure 28* **-Z-**) is symmetrically constant.

dimension Z – symmetrically constant all the way around with respect to exhaust system cover
dimension X – equal projection (right side of vehicle)

Re-align sports tailpipes if necessary.

Information
The tailpipes are adjusted in X direction using the slots in the tailpipe.

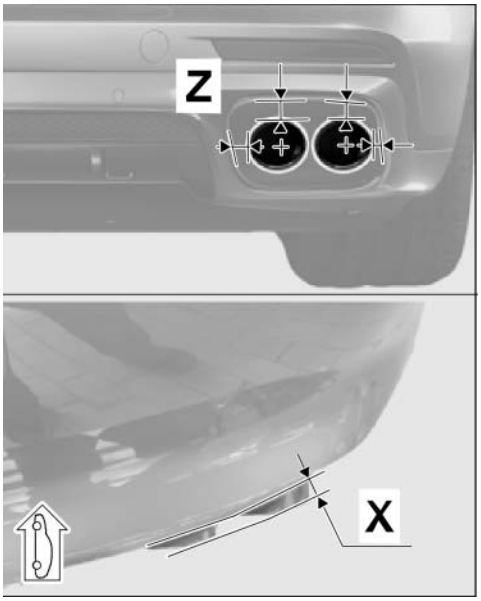

Figure 28

3.6.3 Check that the sports tailpipes project equally = “dimension X” with respect to the rear apron (left and right side of vehicle ⇒ *Figure 28* **-X -**).

Re-align sports tailpipes if necessary.

3.6.4 Tighten lens-head screw (M6 x 12) on the sports tailpipe.
Tightening torque 8 Nm (6 ftlb.) +/-1 Nm (+/-0.5 ftlb.)

3.6.5 Tighten hexagon-head bolt (M8 x 16, 2 x) on strut between the rear silencers.

Tightening torque 23 Nm (17 ftlb.)

3.7 Install rear underbody cover. ⇒ *Workshop Manual '519419 Removing and installing cover for rear underbody'*

3.8 Secure center underbody cover at the left/right side and install tunnel cover on –center– underbody. ⇒ *Workshop Manual '519319 Removing and installing cover for centre underbody'*

NOTICE

Voltage drop

- **Risk of irreparable damage to control unit**
- **Risk of damage to control unit**
- **Fault entries in the control unit**
- **Coding in the control unit is aborted**
- **Malfunctions in control unit, even during programming**

⇒ **Switch off the ignition and remove the ignition key before disconnecting the control unit.**

⇒ **Ensure that the power supply is not interrupted during programming.**

⇒ **Connect a battery charger with a current rating of at least Nominal value 90 A to the vehicle battery.**

Coding: 4 Entering the sports exhaust system (0P8 or 0P9) in the vehicle data

4.1 Preparatory work – Coding

NOTICE

Control unit programming will be aborted if the Internet connection is unstable.

- **An unstable Internet connection can interrupt communication between PIWIS Tester III and the vehicle communication module (VCI). As a result, control unit programming may be aborted.**

⇒ **During control unit programming, always connect PIWIS Tester III to the vehicle communication module (VCI) via the USB cable.**

4.1.1 Connect **9900 - PIWIS Tester 3** to the vehicle and switch it on.

4.1.2 Switch on ignition **AND** hazard warning lights on the vehicle.

Information

The **9900 - PIWIS Tester III** instructions take precedence since the description may be different with later Tester releases.

The procedure described here has been structured in general terms; different text or additions may appear on the **9900 - PIWIS Tester III**.

4.1.3 Select the "Diagnostics" menu item on the PIWIS Tester.

4.1.4 If **9900 - PIWIS Tester 3** is connected correctly, a connection to the vehicle will be established: "Model line 971" is detected.

4.1.5 Create a vehicle analysis log (VAL) in the "Overview" menu item.

Information

The function is **ONLY** available when the Tester is online!

4.2 Enter the new vehicle equipment in the vehicle data using "PIWIS Online"

4.2.1 Select the function "Maintenance of vehicle data with PIWIS ONLINE" in the "Model line-specific tests and campaigns" menu item.

A message appears informing you that the "Actual" (vehicle) data and "Required" (PIWIS Online) data will be compared.

Press •F12 “ to continue.

4.2.2 Confirm the message "The vehicle data was compared with PIWIS Online. Significant differences were found" with •F12 “ .

4.2.3 Look for the option "INTERIOR SOUND MEASURES (VW SILENCERS)" in the "Family" column.

Select the option "2HB – INTERIOR SOUND MEASURES (SHAKER)" from the drop-down menu in the "Value" column. Press •F12 “ to continue.

4.2.4 Look for the option "EXHAUST TAILPIPE" in the "Family" column.

Select the required option "0P8 – SPORTS EXHAUST SYSTEM – STAINLESS-STEEL TAILPIPES” or “0P9 – SPORTS EXHAUST SYSTEM – BLACK TAILPIPES" from the drop-down menu in the "Value" column. Press •F12 “ to continue

4.2.5 A table containing the coding value and the columns "new value" and "old value" is displayed in the overview. Press •F8 “ to continue.

4.2.6 Data is then written/stored. The following messages appear one after the other:

- Transferring vehicle data to PIWIS Online.
- Writing and transferring vehicle data to the vehicle.
- Vehicle order was written successfully.
- A check was performed in order to check whether control units have to be coded or programmed as a result of the changes that were made.

4.2.7 Press •F10 “ to open the log. Check that the selected vehicle equipment has been entered and close the log.

5 Code/program the new vehicle equipment.

5.1 Code/program the new vehicle equipment.

5.1.1 Confirm the table containing a list of control units that must be coded/programmed by pressing •F12 “ .

5.1.2 Individual data records will be loaded, depending on the number of control units to be coded/programmed.

Wait until the message "Creating backup documentation. Please wait…" and "Coding was completed successfully" appears. Press •F12 “ to continue.

Repeat the process for other control units if necessary.

5.1.3 Wait until the message "Adaptation of the control units is complete." appears and check the coding status of the control units in the table that is displayed.

Continue by pressing •F12 “ to return to the control unit overview.

5.2 Read out the fault memories of all systems, work through any existing faults and erase the fault memories. ⇒ *Workshop Manual '0X03IN Diagnostic maintenance: diagnostic system and maintenance inter…'*

6 Function tests

6.1 Perform function test on engine noise pulse sender

6.1.1 Look for and select "Control unit for interior acoustics" in the control unit overview. Then select the "Drive links/checks" tab.

6.1.2 Then select "Sound symposer activation". Press •F12 “ to continue.

6.1.3 Press •F8 “ to execute function test. If the test is successful, the following information will be displayed:

- Results column: "Successful output without return value"
- Value column: "active".

You will also hear an increasing acoustic signal.

6.1.4 Go back to the control unit overview by pressing •F11 “

6.2 Perform “Sports exhaust system” function test

6.2.1 Start the engine.

6.2.2 Switch the sports exhaust system on and off using the Porsche Communication Management system (PCM). To do this, select the menu "Car", then "Drive" and then "Sports exhaust system".

6.2.3 The **ACTIVE** sports exhaust system is displayed with orange tailpipes for a period of 20 seconds in the vehicle silhouette.

Then, an **ACTIVE** sports exhaust system can be identified by the red line under the "Twin tailpipe" symbol (sports exhaust system control panel) on the PCM touchscreen.

6.2.4 You must hear a change in the noise level.

6.3 "Driving modes" and "Sports exhaust system" function test

6.3.1 Select various "driving modes": SPORT, SPORT PLUS, INDIVIDUAL or NORMAL/HYBRID.

6.3.2 Check that the display in the PCM and the behaviour of the sports exhaust system are as described under "Driving modes" and "Sports exhaust system" in the Driver's Manual.

6.4 Switch off ignition and disconnect **9900 - PIWIS Tester 3**.

26 01 31 03: –Sports exhaust system (1 x) retrofitted– Labor time: **428 TU**

Includes: Installing engine noise pulse sender and control unit;
Routing and connecting electric wire harness;
Replacing front silencer, rear silencers and aligning new sports tailpipes (4 x) with rear apron;
Coding sports exhaust system and performing function test;
Reading out fault memory and correcting and erasing faults.

Important Notice: Technical Bulletins issued by Porsche Cars North America, Inc. are intended only for use by professional automotive technicians who have attended Porsche service training courses. They are written to inform those technicians of conditions that may occur on some Porsche vehicles, or to provide information that could assist in the proper servicing of a vehicle. Porsche special tools may be necessary in order to perform certain operations identified in these bulletins. Use of tools and procedures other than those Porsche recommends in these bulletins may be detrimental to the safe operation of your vehicle, and may endanger the people working on it. Properly trained Porsche technicians have the equipment, tools, safety instructions, and know-how to do the job properly and safely. Part numbers listed in these bulletins are for reference only. The work procedures updated electronically in the Porsche PIWIS diagnostic and testing device take precedence and, in the event of a discrepancy, the work procedures in the PIWIS Tester are the ones that must be followed.

© 2021 Porsche Cars North America, Inc.