Valve, Common Rail, Removal
VAH, VHD, VN
D11, D13

FSB 237-021, Valve, Common Rail, Remove

(March 2021)

Some VOLVO vehicles built with 11L or 13L engines between 11/14/2016 and 12/31/2018 may experience internal leakage or an electrical fault of the Electronic Pressure Relief Valve (ePRV).

- If the DTC below is present or diagnostic testing leads to replacing the ePRV for internal leakage, perform the repair procedure outlined in this FSB to install the ePRV delete kit and run accessory kit.

DTC list:

- P009B-13, Fuel Pressure Relief Control Circuit Open

Required Parts

Part Number	Description	Quantity
85156544	EPRV delete kit	1

Required software

Part Number	Description	Quantity
USA17, USA18	Accessory kit 85156014	1

If Applicable Parts

(Reference Step 18)

11L Engines

Part Number	Description	Quantity
23488937	Pressure Sensor, F2 Common Rail	1
23502057	Wiring Harness, Rear	1

13L Engines

Part Number	Description	Quantity
23488939	Pressure Sensor, F2 Common Rail	1
23502054	Wiring Harness, Rear	1

Note: Running this kit without removing the ePRV will result in adverse vehicle affects.

Procedure

You must read and understand the precautions and guidelines in Service Information, Function Group 20, "Engine Safety Practices" before performing this procedure. If you are not properly trained and certified in this procedure, ask your supervisor for training before you perform it.

NOTE: Information is subject to change without notice. Illustrations are used for reference only and can differ slightly from the actual vehicle being serviced. However, key components addressed in this information are represented as accurately as possible.

CAUTION

Risk of material damage.
Risk of impurities being introduced into the fuel system.
Ensure conditions of maximum cleanliness when carrying out any work on the fuel system.

CAUTION

Risk of skin injury.
High fuel pressure.
The injection system may be pressurised. When working on the injection system, remove the first part cautiously.

CAUTION

Risk of skin injury.
Grease, oil and chemical substances can cause skin and eye injuries. Oils and grease can cause acne and eczema. A used lubricant is more harmful than an unused lubricant. Protective equipment such as gloves and eye protection must be used when working with grease, oils and chemical substances.

1 Refer to IMPACT document ID: **2115-03-02-02 Valve Cover, Replacement** for valve cover removal procedure.

2 Loosen the cap nuts.

3 Remove and discard the pipe.

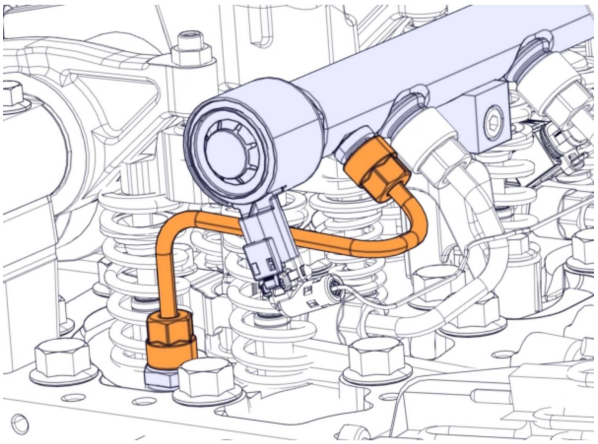

T2170571

4 Disconnect the connector.

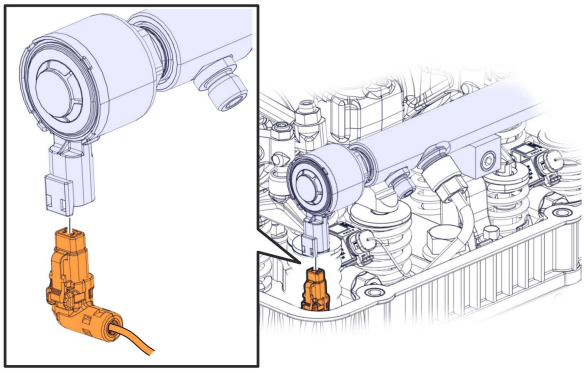

T2170572

5 Clean the area around the fitting.

6 Remove the fitting and seal.

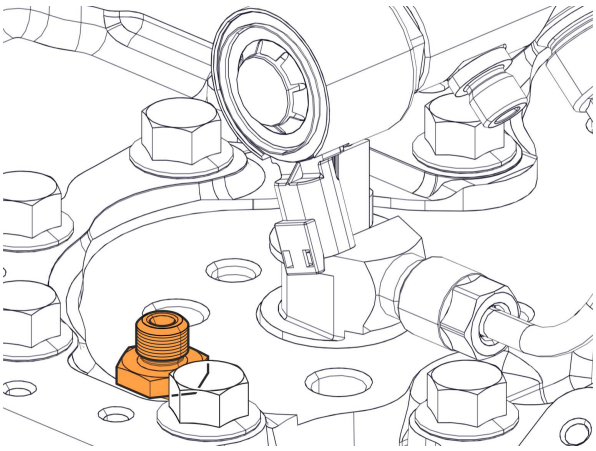

T2170573

7 Install the seal and plug in the cylinder head.

Tightening torque	
Cylinder head, plug	36± 6 lbf-ft. (50 ± 8 Nm)

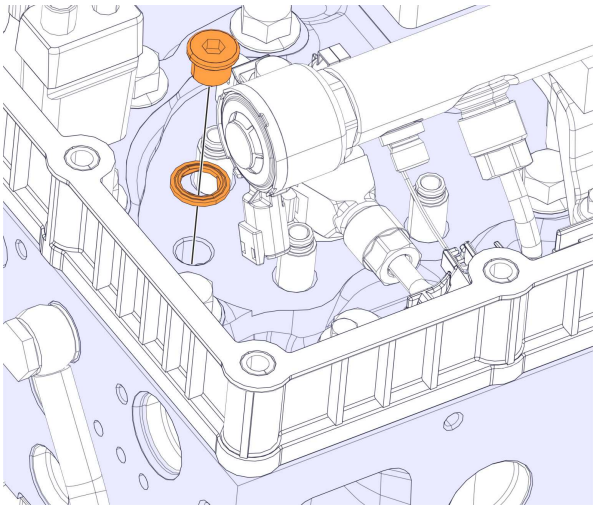

T2170574

8 Install the tool. 88800634

9 Remove the valve.

Note: Use a spanner as a counterhold to prevent the common rail brackets and pressure pipes from being loaded during component removal and installation.

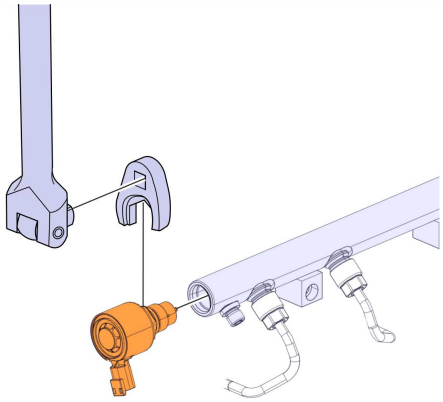

T2170575

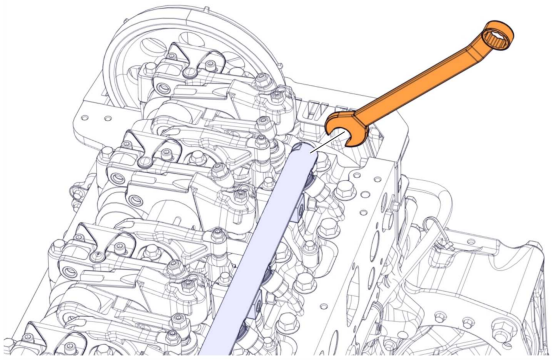

T2170576

CAUTION

Risk of personal injury.
Loose particles can spatter up and injure the eyes. Work with compressed air can cause hearing impairment.
Always wear safety goggles and hearing protection when working with compressed air.

10 Install the protecting plug.

Required material	
Protecting plug	88800527

11 Clean the threads.

Note: Leave the protecting plug in place until installing the common rail plug.

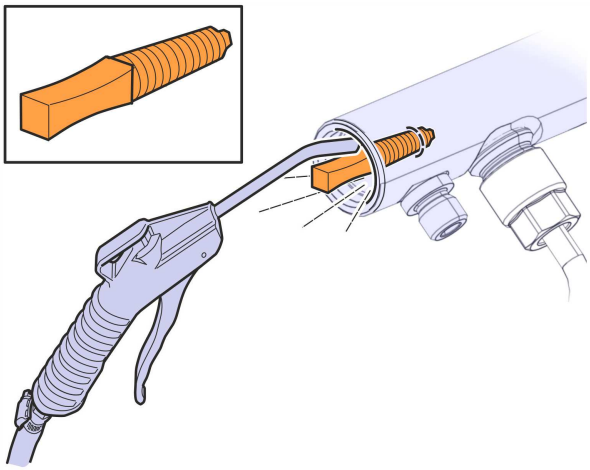

T2170577

12 Remove the protecting plug.

13 Install the plug in the rail.

Note: Do not use locking fluid or thread sealant.

14 Torque tighten the plug.

Tightening torque	
Common rail, plug	92± 7 lbf–ft. (125 ± 10 Nm)

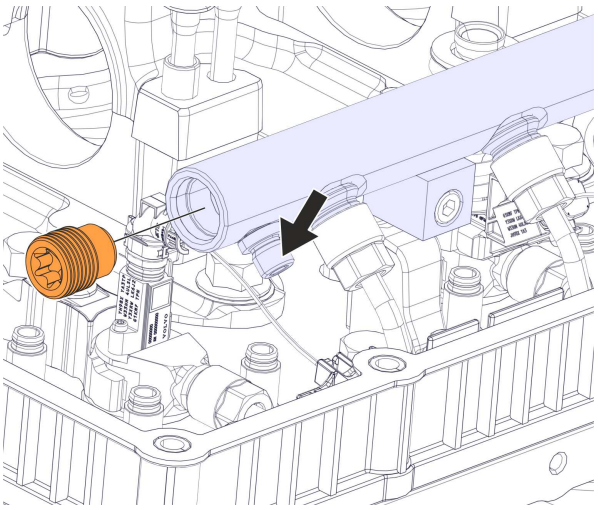

T2170578

Note: Cap is not required to seal the common rail where the drain pipe connected.

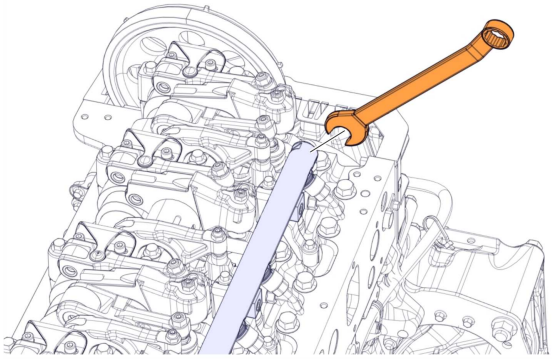

T2170576

Note: Use a spanner as a counterhold to prevent the common rail brackets and pressure pipes from being loaded during component removal and installation.

15 Cut the harness.

16 Remove connector and harness.

Note: Do not tape or seal the end of the harness.

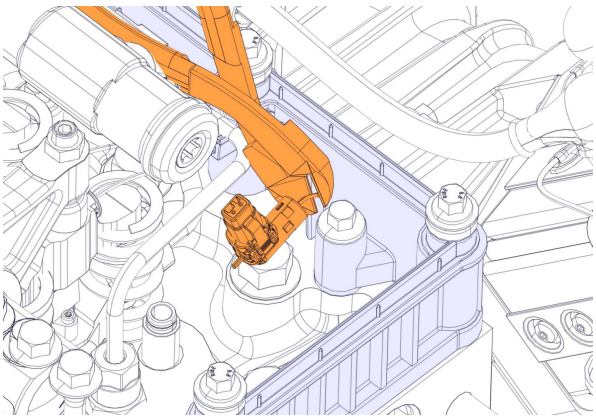

T2170579

17 A product improvement has been made to the Fuel Rail Pressure Sensor (FRPS) and its wiring harness. A visual Inspection of the FRPS electrical connector will indicate which sensor and wiring harness is on the vehicle.

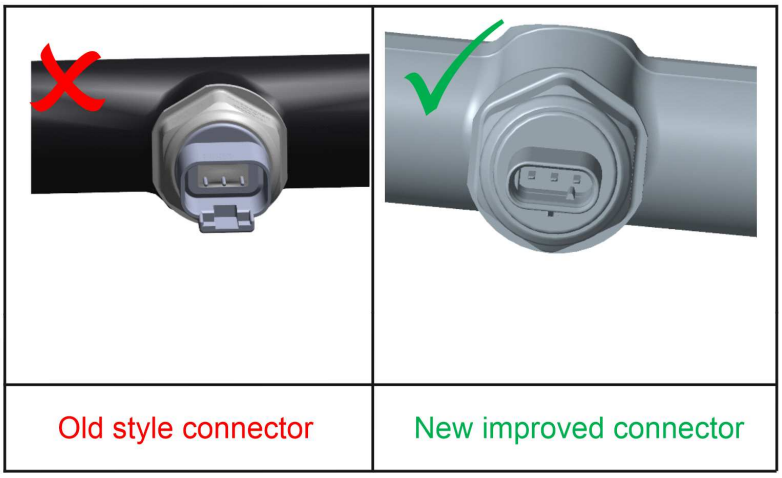

T2170580

18 Inspect the FRPS, if the Old Style Connector is found (displayed above with red X), replace the sensor and wiring harness per Impact Instructions listed below. If the New Improved Connector is found, **No further action is needed and proceed to next step**.

1. Refer IMPACT document ID: **2373-03-03-06 Pressure Sensor, Common Rail, Replacement, Valve Cover Removed** for pressure sensor replacement.

2. Refer IMPACT document ID: **2861-03-03-03 Wiring Harness, Injector, Replacement (Rear), Valve Cover Removed** for injector wiring harness replacement.

19 Refer to IMPACT document ID: **2115-03-02-02 Valve Cover, Replacement** for valve cover install procedure.

20 Using PTT Operation **1700-22-03-06** Program accessory kit: **85156014**

Reimbursement

This repair may be eligible for reimbursement if a product failure was experienced within time and mileage limits of the applicable Warranty coverage. Reimbursement is obtained via the normal claim handling process.	**UCHP Reimbursement**
Claim Type (used only when uploading from the Dealer Bus. Sys.)	W
Labour Code	
Valve, common rail remove	2373-01-09-01 (0.6 hrs)
ECM and ACM, Reprogramming	2841-22-02-01 (0.4 hrs)
Accessory Kit, programming	1700-22-03-06 (0.1 hrs)
Valve Cover, Replacement	2115-03-02-02 Use Impact for Time (0.9 - 1.9 hr.)
If Applicable	
Pressure Sensor, Common Rail, Replacement, Valve Cover Removed	2373-03-03-06 (0.2 hrs)
Wiring Harness, Injector, Replacement (Rear), Valve Cover removed	2861-03-03-03 Use Impact for Time (0.3 – 0.4 hrs)
Causal Part	22720232

Volvo Trucks North America reserves the right to make any changes in design or to make additions to or upon its products without incurring any obligations to install the same on vehicles previously built.