SERVICE BULLETIN

Release Date: March 9th, 2021

IND

Communication #: I-20-06-A/B/C

Model Year(s): 2014–2020

— Confidential and Proprietary —

VERSION: R02 (March 25, 2021)

Added part B kit contents on page 9 and key fob decal install instructions on page 12

IMPORTANT STOP SALE NOTICE!
Stop selling affected vehicles immediately.

IMPORTANT
If you are working with a printed copy, please verify you have the most current version of this document.

SUBJECT: FREQUENCY INTERFERENCE

PURPOSE

Indian Motorcycle has determined that some 2014-2020 Full–Size (111 c.i. / 116 c.i.) and 2020 Challenger models sold in Japan show compliance concerns due to operating range frequency of key fob, Vehicle Control Module (VCM) or Wireless Control Module (WCM), and Tire Pressure Monitor System (TPMS). Mentioned devices operate in restricted in Japan frequency of 433Hhz.

To address this, Indian Motorcycles has released this Service Bulletin instructing dealers to replace key fobs and the VCM / WCM for devices which operate in 315Mhz frequency and are complainant with Japanese regulations. On models equipped with TPMS system TPMS sensors needs to removed.

AFFECTED MODELS

MODEL YEAR	MODELS	VEHICLE IDENTIFICATION NUMBER RANGE
2014–2020	Full–Size (111 c.i. / 116 c.i.)	Reference Unit Inquiry on the dealer website or the Service Communications list on the STOP site to lookup affected VINs.
2020	Challenger	

CUSTOMER NOTIFICATION

Dealers are required to review their sales records and make arrangements with customers for Bulletin completion. In addition to consumer units, dealers are required to correct any affected units in their inventory. Indian Motorcycle will be mailing a notification letter to consumers affected by this Bulletin.

The information contained within this document is confidential and protected by U.S. and international copyright laws, and is the property of Polaris Inc. This document is provided for the sole use of authorized Polaris dealers and distributors. This document is not to be distributed, duplicated, or copied, digitally or otherwise, without the written consent of Polaris Inc.

WARRANTY CLAIM PARTS INFORMATION

Bulletin parts are excluded from the standard RMA policy and cannot be returned. An Initial Recommended Order Quantity has not been provided for this bulletin. Use Quantity Ordered to Date and the Open VIN List from the STOP site to determine an order amount that's right for your dealership. For more details, refer to University of Polaris training course "Polaris Item Availability and Daily Ordering" and click on "Bulletin Ordering Training".

WCM AND KEY FOB REPLACEMENT (CHALLENGER)	
Bulletin #	I-20-06-A
Claim Type	SB (Service Bulletin)
Labor Allowance	0.4 hours (24 minutes)
Part Number / Description	• 4019468 (QTY 1) Challenger Key Fob • 2415840 (QTY 1) Challenger WCM
Parts Availability	Available to order
University of Polaris Video Training Required	NO

VCM AND KEY FOB REPLACEMENT (FULL-SIZE 111 C.I. / 116 C.I.)	
Bulletin #	I-20-06-B
Claim Type	SB (Service Bulletin)
Labor Allowance	0.5 hours (30 minutes)
Part Number / Description	2209265 (QTY 1) Kit
Parts Availability	Available to order
University of Polaris Video Training Required	NO

STOP!
Safety Bulletin I-20-03, gear position sensor replacement, must be competed before proceeding with I-20-06-B. Please check unit inquiry if the I-20-03 communication was completed.

TPMS REMOVAL (ONLY VEHICLES EQUIPPED WITH TPMS SENSORS)	
Bulletin #	I-20-06-C
Claim Type	SB (Service Bulletin)
Labor Allowance	2.0 hours (120 minutes)
Part Number / Description	0000541 (QTY 1) Bulletin Misc Labor
Parts Availability	No parts required
University of Polaris Video Training Required	NO

The information contained within this document is confidential and protected by U.S. and international copyright laws, and is the property of Polaris Inc. This document is provided for the sole use of authorized Polaris dealers and distributors. This document is not to be distributed, duplicated, or copied, digitally or otherwise, without the written consent of Polaris Inc.

ACCESSORY LABOR

Polaris will cover labor for the removal and installation of accessories required to complete the bulletin work. Follow the steps below to obtain reimbursement.

How to apply for accessory detachment cost:

1. Create a new warranty case as warranty type "Goodwill".
2. Fill out each necessary item. VIN, mileage, engine hours, repair date, labor time, etc.
3. Enter Indian Motorcycle I-20-06 "accessory Mounting and Dismounting" in the customer concern, probable cause, and repair/correction fields, respectively.
4. Enter warranty fail codes 127/277/132.
5. Add part 0000541, quantity 1.
6. It attaches photo of the vehicle and the mounting accessory that can determine the labor required.
7. Save the warranty repairs you have created.
8. Send email to the Polaris Japan service that fill in the VIN and mileage, attach the same photo as in 6 and send it by mail.
9. Polaris Japan Service will return the approval code.
10. Enter and submit the received approval code in the field Approved code for saved warranty repairs.

The information contained within this document is confidential and protected by U.S. and international copyright laws, and is the property of Polaris Inc. This document is provided for the sole use of authorized Polaris dealers and distributors. This document is not to be distributed, duplicated, or copied, digitally or otherwise, without the written consent of Polaris Inc.

INVENTORY / STOCK PART CLAIMS

Dealers should review their service parts inventory and ensure the following service parts are **NOT** used:

- 2415517 = Challenger WCM
- 4017761 = Challenger Key Fob
- 4017768 = Challenger Key Fob
- 4014121 = Full-Size Motorcycle Key Fob
- 4014111 = Full-Size Motorcycle Key Fob
- 2414229, 2414503, 4014110, 4015220, 4015234, 4016189 = Full-Size Motorcycle VCM
- 2412417 = Sensor, Tire Pressure

NOTICE
To remove these service parts from circulation, file a Part Stock claim as directed below.

Use the following process for filing a Part Stock warranty claim for any of the parts listed above.

1. Start a new Part Stock warranty claim.
2. Select Product Line: IND
3. Enter today's date into the Date Failed and Date Repair information fields
4. Enter Indian Motorcycle® I-20-06 into the CONCERN field.
5. Enter Indian Motorcycle® I-20-06 into the CAUSE field.
6. Enter Removed From Inventory into the CORRECTION field.
7. Enter the part number and quantity.
8. Enter warranty fail codes: 127/501/132
9. Validate the parts.
10. Return stock parts to Polaris Japan.

COVERAGE PERIOD

Coverage will begin on March 09, 2021. This bulletin has no expiration date.

PARTS RETURN / DISPOSAL INFORMATION

Under no circumstances shall the parts removed be re-used, sold, or re-purposed for another application. It is your dealership / distributor's responsibility to make sure every part replaced (related to this communication) is taken out of circulation and disposed according to local electrical waste regulations.

FEEDBACK FORM

A feedback form has been created for the technician to provide Polaris with an overall satisfaction rating for the instructions, provide comments on your experience or upload pictures/video. This feedback form is viewable on a mobile device by scanning the QR code or by clicking **HERE** if viewing this document electronically.

The information contained within this document is confidential and protected by U.S. and international copyright laws, and is the property of Polaris Inc. This document is provided for the sole use of authorized Polaris dealers and distributors. This document is not to be distributed, duplicated, or copied, digitally or otherwise, without the written consent of Polaris Inc.

I-20-06-A - WCM AND KEY FOB REPLACEMENT (CHALLENGER)

Reference the service manual below when performing repair procedures.

- 2020–2021 Indian Challenger Service Manual **9850038**.

TOOLS REQUIRED

- 6mm allen socket
- 10mm socket
- Ratchet
- Torque Wrench
- Electric Isolation Tape
- Dielectric Grease or Petroleum Jelly
- Digital Wrench Multi-link XP connector

PREPARATION

Before proceeding with WCM and key fob replacement, obtain the consumer pin number.

WCM REMOVAL

NOTICE
Remove and install the SEAT by using the instructions located in **2020–2021 Indian Challenger Service Manual 9850038**.

1. Park motorcycle on flat level surface.
2. Ensure the bike is powered off.
3. Using a 6mm allen, remove the two chin fairing fasteners ①. Remove the chin fairing

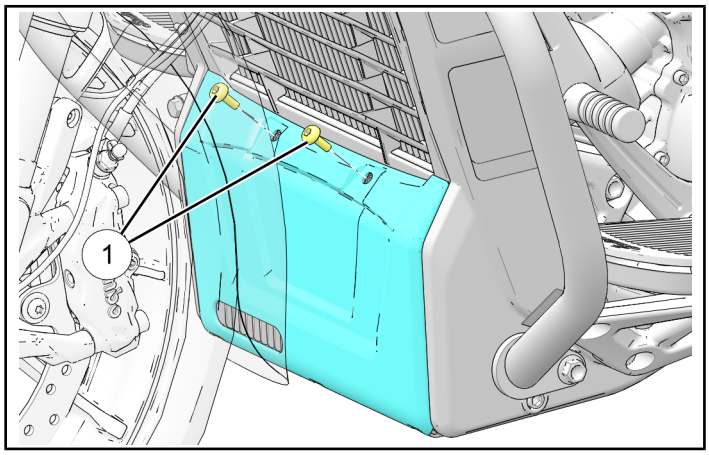

4. Using a 6mm allen, remove the battery bracket fastener ② and slide the bracket out of its retention feature.

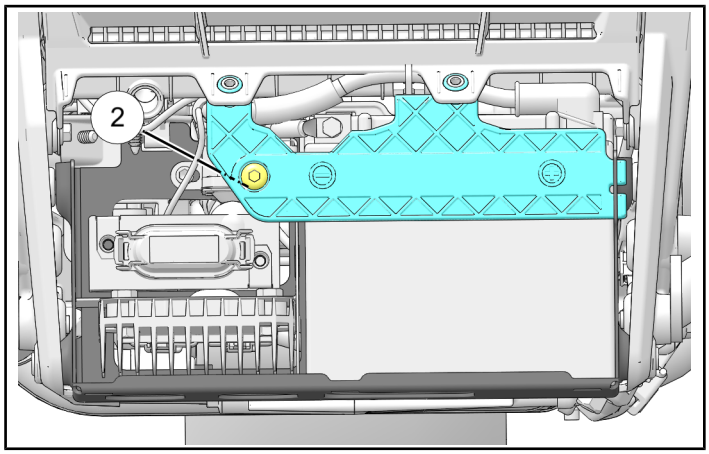

5. Using a 10mm socket, disconnect the negative battery cable from the battery.

IMPORTANT
Position the cable out of the way to prevent accidental contact with the battery terminal.

NOTICE
Electrical tape can be used to cover the negative battery terminal and cable end to prevent a short from occurring across the WCM.

6. Remove the seat.
7. Disconnect WCM ③ electrical connector.

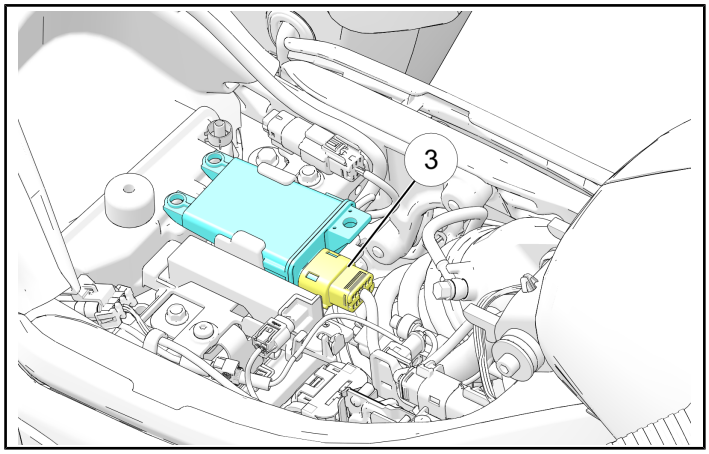

The information contained within this document is confidential and protected by U.S. and international copyright laws, and is the property of Polaris Inc. This document is provided for the sole use of authorized Polaris dealers and distributors. This document is not to be distributed, duplicated, or copied, digitally or otherwise, without the written consent of Polaris Inc.

8. Press down the bracket latch and slide WCM froward to remove.

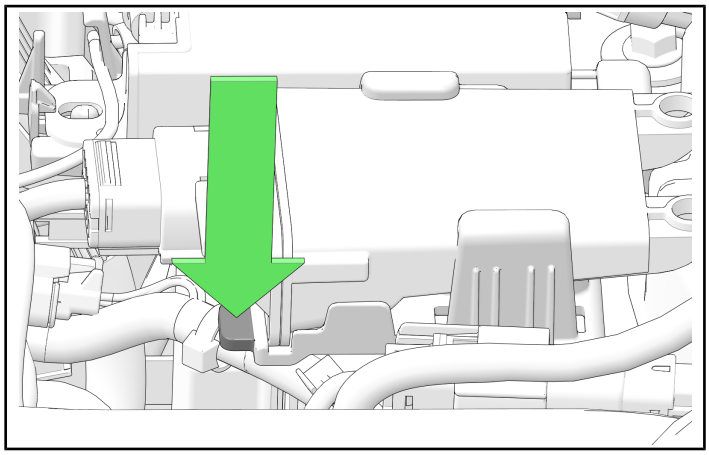

WCM INSTALLATION

1. Install WCM into position and connect WCM electrical connector ③.

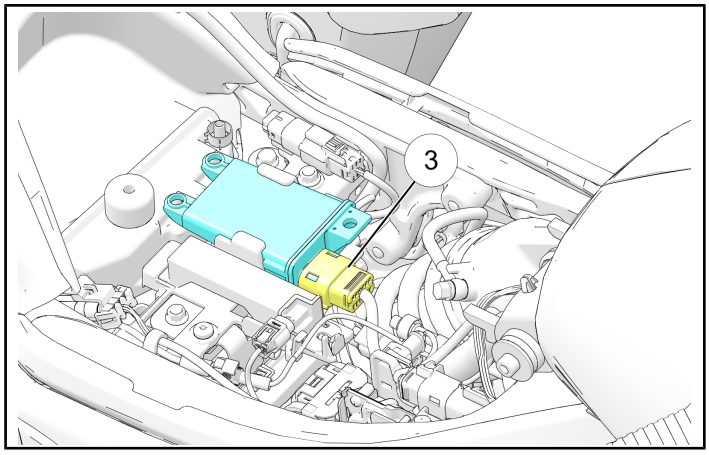

2. Connect the negative battery cable. Torque negative terminal fastener to specification. Apply light film of dielectric grease or petroleum jelly to the terminal.

TORQUE
Battery Terminal: **48 in-lbs (5 N·m)**

3. Install battery bracket and fastener ②. Make sure the retention tab is fully engaged. Torque fastener to specification.

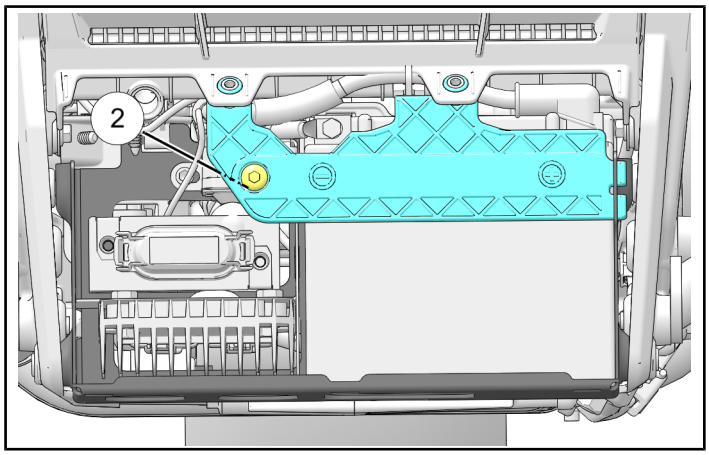

TORQUE
Battery Bracket Fastener: **84 in-lbs (10 N·m)**

The information contained within this document is confidential and protected by U.S. and international copyright laws, and is the property of Polaris Inc. This document is provided for the sole use of authorized Polaris dealers and distributors. This document is not to be distributed, duplicated, or copied, digitally or otherwise, without the written consent of Polaris Inc.

© 2021 Polaris Inc.

4. Install chin faring and fasteners ①. Make sure the tabs are aligned on the bottom. Torque fasteners to specification.

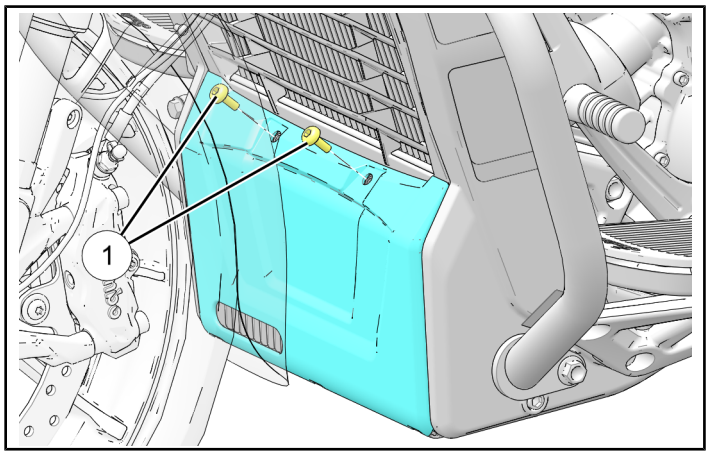

TORQUE
Chin Fairing Fastener: **36 in-lbs (4 N·m)**

5. Install the seat. See **2020–2021 Indian Challenger Service Manual 9850038**.

KEY FOB PROGRAMMING

Programming the key fob can only be done by the dealer and must be done using Digital Wrench®. A single key fob can be programmed to multiple motorcycles. One motorcycle can have up to 4 key fobs programmed to the WCM.

1. Connect the recommended BatteryMINDer® battery charger to the motorcycle connector. The connector is on the left side of the unit near the fuse box.

2. Connect Digital Wrench® and turn power switch to "ON" position. Do NOT start the engine.
3. In Digital Wrench®, select "Special Tests" (Red Toolbox) , next select "#4: Key fob Maintenance".

4. Select "Continue." Digital Wrench® will then read the WCM information for key fob.

The information contained within this document is confidential and protected by U.S. and international copyright laws, and is the property of Polaris Inc. This document is provided for the sole use of authorized Polaris dealers and distributors. This document is not to be distributed, duplicated, or copied, digitally or otherwise, without the written consent of Polaris Inc.

© 2021 Polaris Inc.

5. Locate the key fob ID (FID) located inside the key fob.

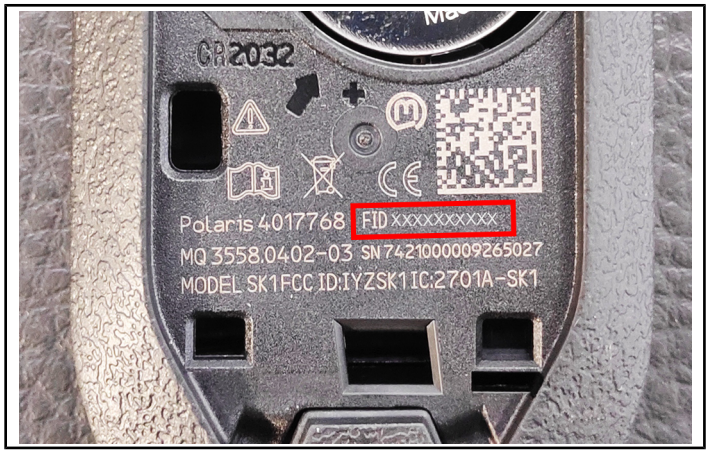

6. Add new key fob type in the 10 digit FID number under "New Value" and then select "Write New".

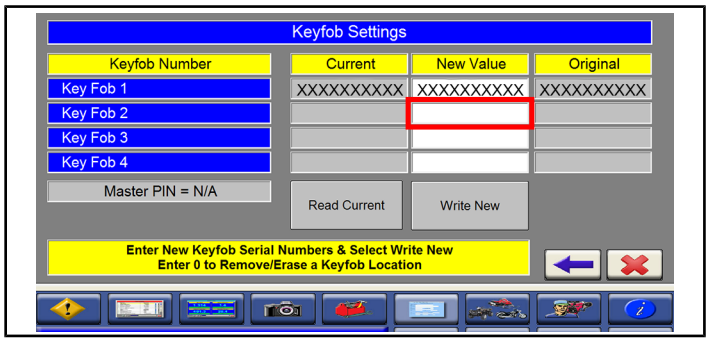

NOTICE
When adding additional key fobs, all current and additional key fobs must be present.

7. Upload the service report record. Setup consumer PIN to match the number the owner provided.
8. File a SB claim for I-20-06-A.
9. If the motorcycle is equipped with TPMS, proceed to I-20-06-C instructions for TPMS removal.

The information contained within this document is confidential and protected by U.S. and international copyright laws, and is the property of Polaris Inc. This document is provided for the sole use of authorized Polaris dealers and distributors. This document is not to be distributed, duplicated, or copied, digitally or otherwise, without the written consent of Polaris Inc.

I-20-06-B KIT CONTENTS (2209265)

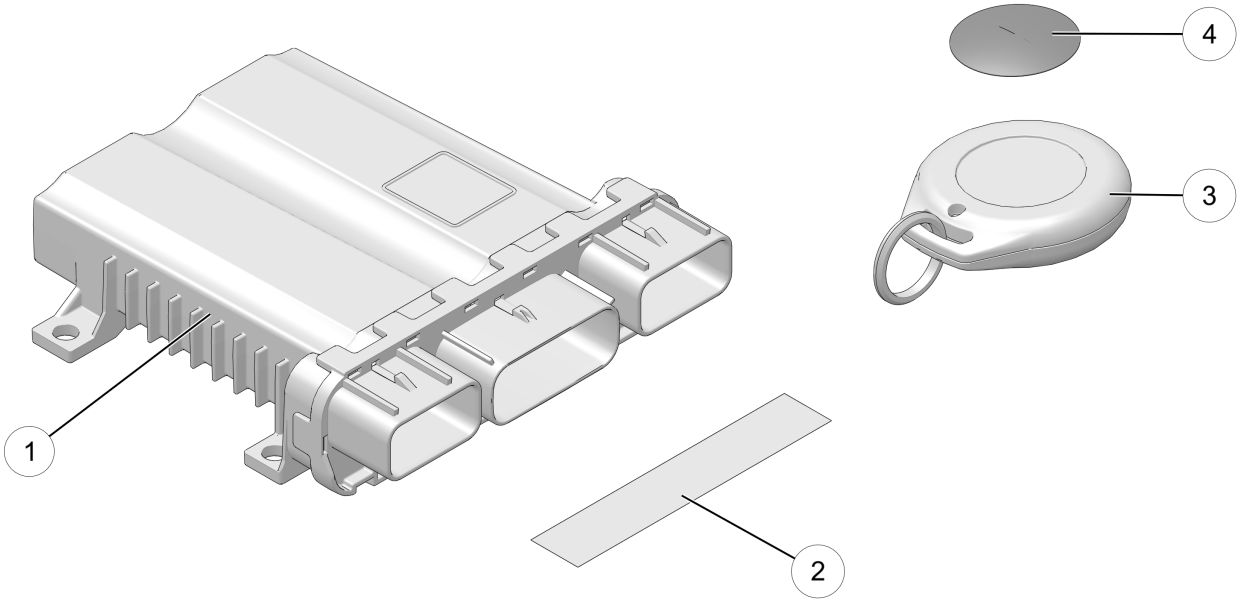

ITEM	DESCRIPTION	PART NUMBER
①	VCM	2416222
②	Foil Shield	8360225
③	Key Fob	4080233
④	Decal, Indian	7180111

The information contained within this document is confidential and protected by U.S. and international copyright laws, and is the property of Polaris Inc. This document is provided for the sole use of authorized Polaris dealers and distributors. This document is not to be distributed, duplicated, or copied, digitally or otherwise, without the written consent of Polaris Inc.

I-20-06-B - VCM AND KEY FOB REPLACEMENT (FULL-SIZE MOTORCYCLES)

Reference the service manual below when performing repair procedures.

- 2014–2016 Indian Full-Size Service Manual **9925933**.
- 2017–2021 Indian Full-Size Service Manual **9850035**.

TOOLS REQUIRED

- 5mm allen socket
- 6mm allen socket
- 10mm socket
- Ratchet
- Torque Wrench
- Electric Isolation Tape
- Dielectric Grease or Petroleum Jelly
- Digital Wrench Smart-Link or Multi-link XP connector

PREPARATION

STOP!

Safety Bulletin I-20-03, gear position sensor replacement, must be competed before proceeding with I-20-06-B. Please check unit inquiry if the I-20-03 communication was completed.

Before proceeding with VCM and key fob replacement, obtain the consumer pin number.

VCM REMOVAL

NOTICE

Remove and install the SEAT by using the instructions located in the applicable Service Manual.

1. Park motorcycle on flat level surface.
2. Ensure the bike is powered off.
3. Remove seat. See **2017–2021 Indian Full-Size Service Manual 9850035**.
4. Using a 5mm hex wrench, remove the bolt ② securing the VCM mounting plate to the battery box.

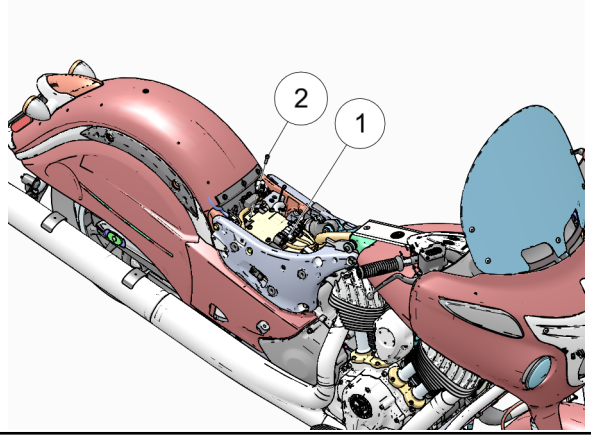

IMPORTANT

Do not disconnect the VCM, Make sure the VCM does not touch the positive battery terminal or cable. This can cause the VCM to short out.

5. Disconnect the negative battery cable.

IMPORTANT

Position the cable out of the way to prevent accidental contact with the battery terminal.

NOTICE

Electrical tape can be used to cover the negative battery terminal and cable end to prevent a short from occurring across the VCM.

6. Disconnect the three multi-plugs ① from the VCM.
7. Lift the VCM / mounting plate assembly from the rear and disengage hinge pins from the battery box to remove.

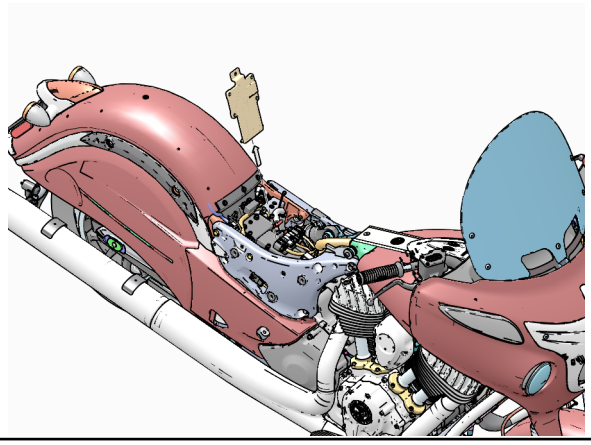

The information contained within this document is confidential and protected by U.S. and international copyright laws, and is the property of Polaris Inc. This document is provided for the sole use of authorized Polaris dealers and distributors. This document is not to be distributed, duplicated, or copied, digitally or otherwise, without the written consent of Polaris Inc.

ANTENNA FOIL SHIELD INSTALLATION

1. Locate the antenna foil shield (8360225)

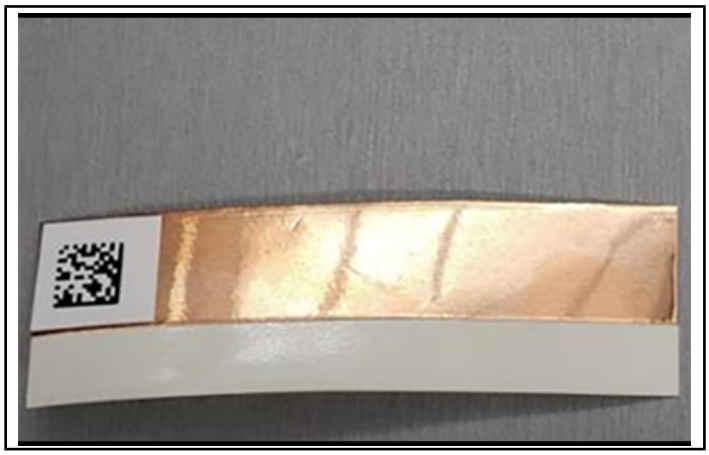

2. Wipe upper part of antenna with rag soaked in alcohol and apply foil shield 8360225 on top of antenna as shown below.

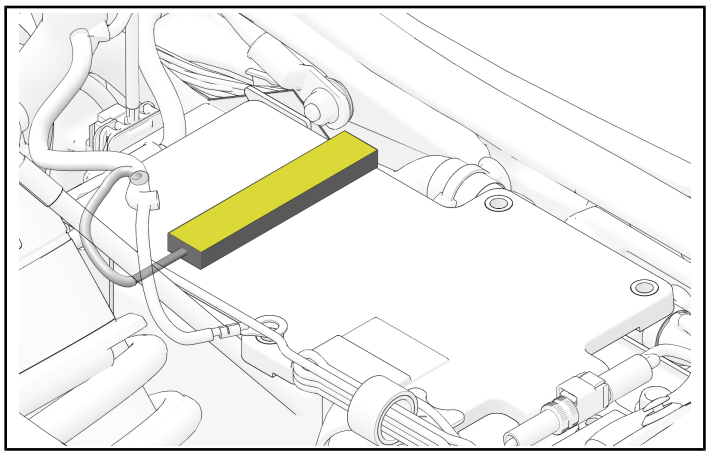

VCM INSTALLATION

1. Install the VCM to the mounting plate and connect the three multi-plugs to the VCM.
2. Connect the negative battery cable, reinstall fastener, and torque to specification. Apply thin film of dielectric grease or petroleum jelly to the battery terminal.

TORQUE
Battery Terminal Fasteners: **36 in-lbs (4.1 Nm)**

3. Install the VCM mounting fastener and torque to specification.

TORQUE
Vehicle Control Module Mounting Plate Fastener: **84 in-lbs (9.5 Nm)**

4. Install the seat. See **2017–2021 Indian Full-Size Service Manual 9850035**.

The information contained within this document is confidential and protected by U.S. and international copyright laws, and is the property of Polaris Inc. This document is provided for the sole use of authorized Polaris dealers and distributors. This document is not to be distributed, duplicated, or copied, digitally or otherwise, without the written consent of Polaris Inc.

© 2021 Polaris Inc.

KEY FOB PROGRAMMING

Programming the key fob can only be done by the dealer and must be done using Digital Wrench®. A single key fob can be programmed to multiple motorcycles. One motorcycle can have up to 4 key fobs programmed to the VCM.

1. Connect Digital Wrench® and turn power switch to "ON" position. Do NOT start the engine.
2. In Digital Wrench®, select "Special Tests" (Red Toolbox) , next select "#4: Key fob Maintenance".

3. Select "Continue." Digital Wrench® will then read the VCM information for key fob.

4. Locate the key fob ID (FID) located on the tag of the key fob.

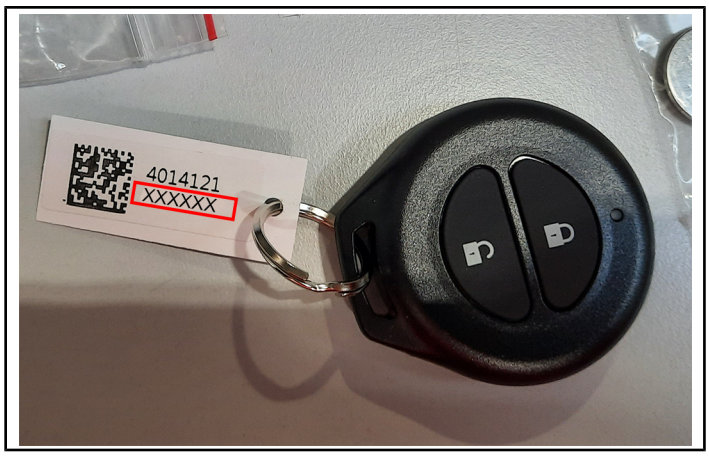

5. Add new key fob type in the 6 digit FID number under "New Value" and then select "Write New".

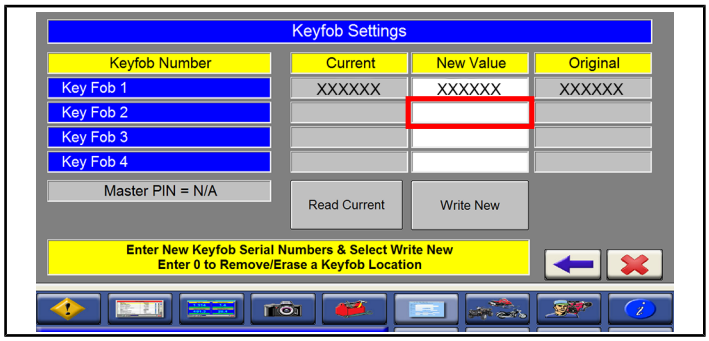

NOTICE
When adding additional key fobs, all current and additional key fobs must be present.

6. To change or add a new key fob number, type in the FID number under "New Value" and then select "Write New".

NOTICE
When adding additional key fobs, all current and additional key fobs must be present.

7. Upload the service report record. Setup consumer PIN to match the number the owner provided.
8. Install the decal onto the key fob in the orientation shown.

The information contained within this document is confidential and protected by U.S. and international copyright laws, and is the property of Polaris Inc. This document is provided for the sole use of authorized Polaris dealers and distributors. This document is not to be distributed, duplicated, or copied, digitally or otherwise, without the written consent of Polaris Inc.

VCM REFLASH

1. Connect the recommended BatteryMINDer® battery charger to the motorcycle connector. The connector is located behind the left hand side cover and taped back to the chassis harness. Carefully remove the tape to expose the connector and length of wire. Be sure to properly secure the wire and connector before operating the vehicle.

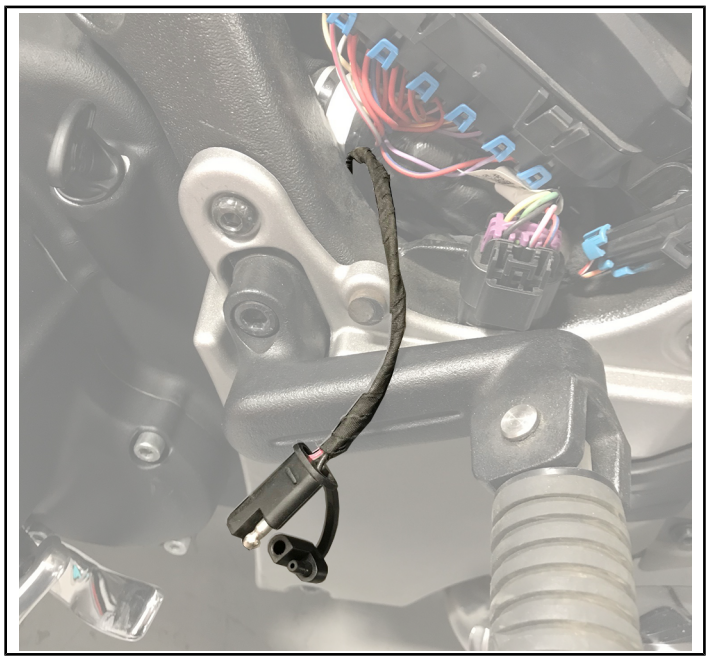

2. Verify that Digital Wrench version 4.2 Update 2/04/21 or later has been installed on your PC or laptop and proceed to step 7.

   If you do not have Version 4.2 – Update 2/04/21 or later installed, you must first download it before proceeding with the reflash proceed to step 3.

NOTICE
If you do not have Digital Wrench installed on your computer, you must first download the **Digital Wrench Base Version Installer** (STEP 3).

3. To download Digital Wrench Base Version, go to your dealer homepage and select **Digital Wrench Base Version Installer** from the **Service and Warranty** dropdown menu and download.

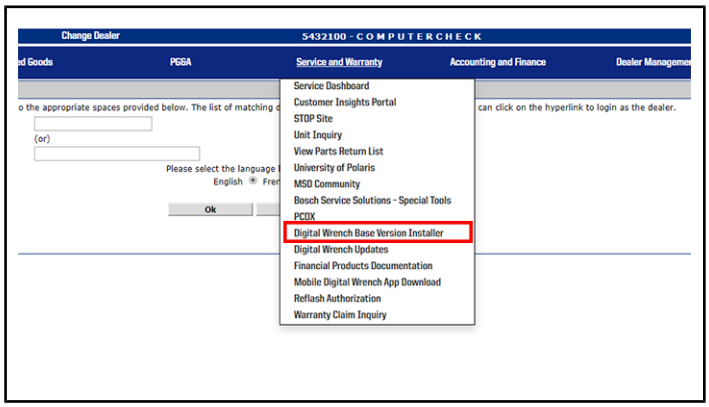

NOTICE
International Subsidiaries and Distributors use the **Digital Wrench Subscriptions** link to purchase and update your digital wrench software.

4. Once the Base Version is installed, go to your dealer homepage and select **Digital Wrench Updates** from the **Service and Warranty** dropdown menu.

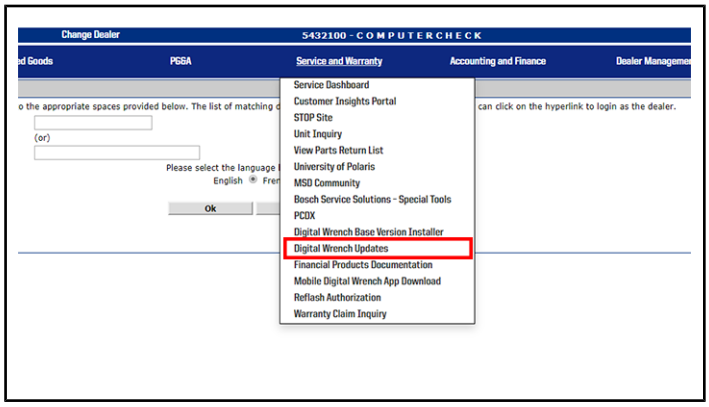

5. Click on **Digital Wrench Version 4.2 Updates.**
6. Download and install **Digital Wrench Version 4.2 update 2/04/21 or higher.**

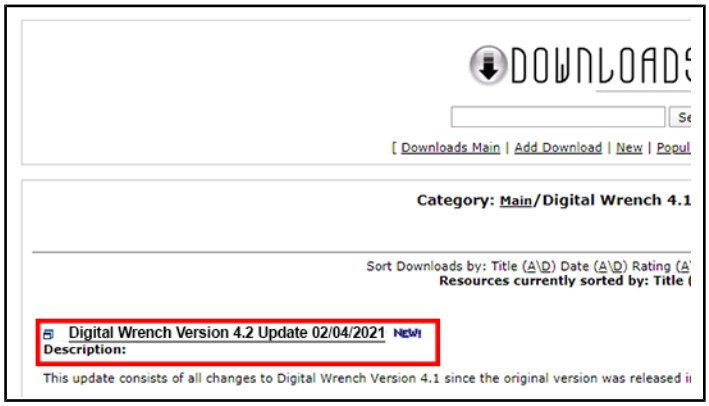

The information contained within this document is confidential and protected by U.S. and international copyright laws, and is the property of Polaris Inc. This document is provided for the sole use of authorized Polaris dealers and distributors. This document is not to be distributed, duplicated, or copied, digitally or otherwise, without the written consent of Polaris Inc.

7. Connect SmartLink / MultiLink XP cables to PC and vehicle.

8. Open the Digital Wrench program.

9. Select the model year, product line, and vehicle description by selecting the "Change Vehicle Type" icon .

10. Select the **Special Test Tab** ①.

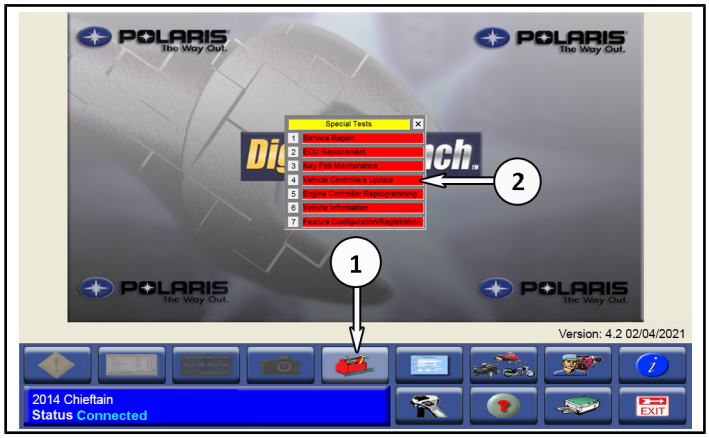

11. Select **Vehicle Controller Update** ②.

IMPORTANT

DO NOT use **Engine Controller Reprogramming** instead of **Vehicle Controllers Update**. This will result in loss of stage calibration.

NOTICE

Digital Wrench will automatically identify current software levels and determine which modules require software updates.

IMPORTANT

Make sure the vehicle battery is fully charged or connected to a battery charger before proceeding.

STAGE CALIBRATION: If a motorcycle is equipped with an Indian Motorcycle stage calibration, Digital Wrench will identify and maintain the upgraded software calibration if **Vehicle Controllers Update** is selected.

⚠ CAUTION

The VCM update procedure will take you through TWO separate reprogramming procedures.

- Boot Mode
- Reflash Application

During the reflash process the gauge and all indicators will power down. Each procedure must be completed in sequence or the VCM will not function.

12. Follow the on-screen prompts until all control modules have been updated.

13. Once the flash is complete, hit the continue button and leave Digital Wrench connected and ignition powered ON. **DO NOT** touch the unit for 35 seconds.

14. Power ignition off and wait 130 Seconds.

15. Check / clear any stored fault codes, disconnect Digital Wrench and test ride the motorcycle.

NOTICE

Following the VCM reflash, some customers may notice a slight delay in illumination of their fog lights (if equipped) during vehicle use. This is normal and is intended to reduce current flow through the VCM

16. File a SB claim for I-20-06-B.

17. If the motorcycle is equipped with TPMS, proceed to I-20-06-C instructions for TPMS removal.

The information contained within this document is confidential and protected by U.S. and international copyright laws, and is the property of Polaris Inc. This document is provided for the sole use of authorized Polaris dealers and distributors. This document is not to be distributed, duplicated, or copied, digitally or otherwise, without the written consent of Polaris Inc.

I-20-06-C - TPMS REMOVAL

FRONT WHEEL REMOVAL

Steering / Suspension Chapter > Front Wheel / Suspension > Service Procedures > Front Wheel Removal / Installation

TIRE REMOVAL

Steering / Suspension Chapter >Tires > Tire Removal

- Remove fastener ① and TPMS sensor ②.

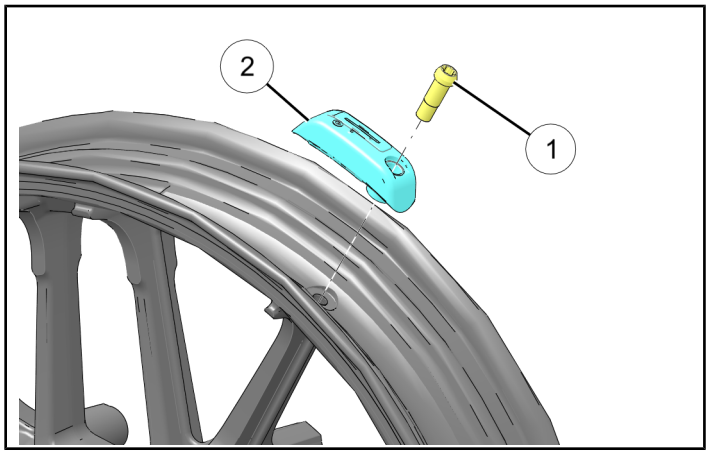

- Dispose the TPMS Sensor.

TIRE INSTALLATION

Steering / Suspension Chapter >Tires > Tire Installation

FRONT WHEEL INSTALLATION.

Steering / Suspension Chapter > Front Wheel / Suspension > Service Procedures > Front Wheel Removal / Installation

REAR WHEEL REMOVAL

Steering / Suspension Chapter > Rear Wheel / Suspension > Rear Wheel Service > Rear Wheel Removal / Installation

TIRE REMOVAL

Steering / Suspension Chapter > Tires > Tire Removal

- Remove fastener ① and TPMS sensor ②.

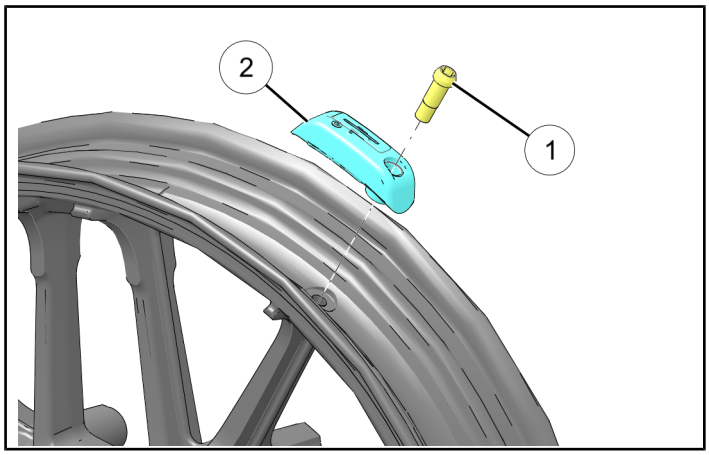

- Dispose the TPMS Sensor.

TIRE INSTALLATION

Steering / Suspension Chapter >Tires > Tire Installation

REAR WHEEL INSTALLATION.

Steering / Suspension Chapter > Rear Wheel / Suspension > Rear Wheel Service > Rear Wheel Removal / Installation

1. File a SB claim for I-20-06-C.

The information contained within this document is confidential and protected by U.S. and international copyright laws, and is the property of Polaris Inc. This document is provided for the sole use of authorized Polaris dealers and distributors. This document is not to be distributed, duplicated, or copied, digitally or otherwise, without the written consent of Polaris Inc.