Revisions to this document are noted by a stripe in the left-hand margin

SUBJECT: Transmission Fluid/Filter Change Recommendations

MODELS AFFECTED: Allison Commercial On-Highway Products, AT 500 Series, MT 600 Series, HT 700 Series, 1000 and 2000 SeriesTransmissions, 3000 Series™ Transmissions (includes B300/400 and T200/300), 4000 Series™ Transmissions (includes B500 and T400/500), TC10®, H 40/50 EP™ Products

Introduction:

Optimum performance and reliability of heavy-duty automatic transmissions can be noticeably influenced by the type of fluid and filter(s) used and the frequency with which those fluid and filter(s) are changed. Allison Transmission has designed extensive programs including specifications and tests to verify the quality of fluids and consequently have specific fluid and filter change recommendations. Due to field studies, changes in emission requirements, vehicle design, and operating environments, Allison Transmission has realigned recommended fluid and filter change intervals. Heavy-duty Automatic Transmission change intervals have been revised to more closely match today's operating environments.

Model Year 2009 and 2010 Prognostics:

Prognostics that monitor and maximize fluid and filter life were offered in Model Year 2009 for 1000/2000/3000/4000 Series Transmissions. 3000/4000 Series Transmissions began using Prognostics with serial numbers 6510822005 (3000), 6520099957 (3000), 6610257671 (4000), 6620007438 (4000). 1000/2000 Series Transmission Prognostics were first available in July of 2008 (MY2009). **MY2009 Allison Prognostics must only be used with Allison Approved TES 668™ and TES 295® fluids**. January 2010 Allison Prognostics are compatible with TES 668™, TES 295® and TES 389® approved fluids in 3000/4000 Series Transmissions starting with TCM calibration CIN 4C or later (4C-xxxxx-yyy-z) and all January 2010 1000/2000 Series Transmissions.

All 3000/4000 Series Transmissions utilizing Prognostics require the use of Genuine Allison High-Capacity filters. All 1000/2000 Series Transmissions utilizing Prognostics require the use of Genuine Allison Control Main Spin-On filter, P/N 29539579. 1000/2000/3000/4000 Series Transmissions may or may not have this feature "enabled" or turned ON. This option requires that the OEM provide the wiring necessary and the feature enabled in the TCM. Refer to the appropriate Operator's Manual for the methods of identifying if Prognostics is enabled.

Refer to Table 4 for Filter/Fluid Change Intervals/Fluid Capacities by Series.

Copyright © 2021 Allison Transmission, Inc. All Rights Reserved.

Fluids and Specifications:

Fluid types are defined by applicable performance specification. The following transmission fluid types are approved for use in Allison Commercial On-Highway transmission products.

Fluid Type	Recommended (Intended) Usage
TES 668™ and TES 295® Fluids • See *www.allisontransmission.com* for a list of Allison Approved TES 668™ and TES 295® fluids	• General or severe duty • Extended change interval (2) (required) • Extended Transmission Coverage (ETC) policy (required) • Prognostics (required) MY2009
TES 468™ Fluids • See *www.allisontransmission.com* for a list of Allison Approved TES 468™ fluids	• General duty • Extended Transmission Coverage (ETC) policy (required) • TES 468™ fluids are only used for H 40/50 EP™ Products
TES 389® Fluids • Schedule One TES 389®* • Military specification fluids (for use in Military Vehicles Only) (1) • See *www.allisontransmission.com* for a list of Allison Approved TES 389® fluids	• General or severe duty • Standard change interval (2) • Prognostics MY2010 (3)
(1) Military specification fluids are approved for use in Military Applications in 3000, 4000, AT, MT, and HT Series products only, and are strictly prohibited from use in 1000 and 2000 Series transmission products. (2) Fluid and filter change intervals are based on transmission model, vocation (duty cycle), and fluid type (see attached charts). NOTE: Fluid drain intervals are based on 100 percent fill with Allison approved fluids. Fluid change intervals may be adjusted based on fluid analysis and fleet data. Refer to Service Information Letter (SIL) 17-TR-96 for details. (3) Prognostics are available with Allison Approved TES 668™, TES 295® and TES 389® fluids only.	

Local conditions, severity of operation or duty cycle may require more or less frequent fluid change intervals that differ from the published recommended fluid change intervals of Allison Transmission. Allison Transmission recommends that customers use fluid analysis as the primary method for determining fluid change intervals. In the absence of a fluid analysis program the fluid change intervals listed in the charts must be used.

For information concerning models not listed in this publication, please call the Allison Technical Assistance Center at 1-800-252-5283.

Refer to the latest revision of Allison publication number GN2055EN, “Technicians’ Guide to Automatic Transmission Fluid”, and SIL 17-TR-96 for additional information on oil analysis and general knowledge about transmission fluids.

Non-approved Fluids

DEXRON®-III and DEXRON®-VI fluids are no longer approved for use in Commercial On-Highway transmission products and have been removed from all Allison Approved TES 389® fluids lists. TES 228® (C4 type) fluids are no longer approved for use in Commercial On-Highway transmission products and have been removed from the Allison Approved TES 389® fluids list.

Copyright © 2021 Allison Transmission, Inc. All Rights Reserved.

Allison Fluid and Filters for Extended Transmission Coverage (ETC)

Specified fluids and genuine Allison filters must be used to qualify for Extended Transmission Coverage. This coverage is forfeited when non-approved fluids and non-genuine filters are used.

Transmission Fluid Mixture Guidelines

Transmissions with a mixture of TES 668™ or TES 295® fluid and Allison Approved TES 389® fluids must follow fluid/filter change recommendations for Allison Approved TES 389®. Upon the second oil change, if the customer reinstalls TES 668™ or TES 295®, the fluid/filter change recommendations outlined in 100 percent TES 668™ or TES 295® approved fluids must be followed. H 40/50 EP™ Products require OEM factory TES 468™ fluids.

Fluid Exchange Machines:

Fluid exchanging machines are not recommended or recognized due to variation and inconsistencies that may not guarantee removal of 100 percent of the used fluid.

3000/4000 Series and H 40/50 EP™ Filters:

New Genuine Allison High Capacity filters were released into production beginning with:

6510670912 (3000) 6610205144 (4000) 7110001551 (H 40/50 EP™) 6520067342 (3000) 6620002521 (4000)

High-Capacity Filters:

Genuine Allison 3000/4000 Series and H 40/50 EP™ high-capacity filters were released into production beginning July 2006. High-capacity filters allow extended filter change intervals when used with Allison Approved TES 668™, TES 295® or TES 468™ fluid. High-capacity service filters can be identified by P/N 29558294 or P/N 29558295 stamped into the filter end cap. Previous Allison 3000/4000 Series and H 40/50 EP™ filters can be identified by P/N 29538231 or P/N 29538232 stamped into the filter end cap.

Table 1. Filter Kits

Series	High-Capacity Filter Kit
3000/4000	29558328 (2 inch)
	29558329 (4 inch)
H 40/50 EP™	29545785

NOTE: Extended 3000/4000 Series transmissions Allison Approved TES 668™ or TES 295® fluid and filter change intervals are only allowed with Genuine Allison high-capacity filters. Filters must be changed at or before recommended intervals.

Copyright © 2021 Allison Transmission, Inc. All Rights Reserved.

Initial Transmission Filter Change Schedule (Production/ReTran®)

*3000 and 4000 SeriesTransmissions — Main Filter 5000 miles (8000 km)/200 hours

*3000 and 4000 Series Transmission ReTran® — Main Filter 5000 miles (8000 km)/200 hours

H 40/50 EP™ Products Spin-On Control Main Filter 5000 miles (8000 km)/200 hours

AT Auxiliary Filter 5000 miles (8000 km)/200 hours

MT Auxiliary Filter 5000 miles (8000 km)/200 hours

*Not required beginning with S/N 6510670912, S/N 6610205144, S/N 6520067342, S/N 6620002521, and S/N 9320005689, S/N 9370006284, S/N 9420006679, S/N 9470005459

1000, 2000, 3000, 4000 Series Hours vs. Miles Chart

Table 2 (2000/3000 Hour Based Maintenance) and Table 3 (4000/6000 Hour Based Maintenance) list the equivalent mileage based on the Allison recommended change intervals for Allison Approved TES 668™ or TES 295® approved fluids. For example, vocations or vehicles that operate with a high density shift cycle typically reach the 6000/3000 hour change limit **before** the recommended mileage limit.

An example could be a transit bus equipped with a B500R that operates an average of 7 mph (11 km/h). Recommended fluid/filter change interval for a B500R equipped with 2 inch control module in a transit vocation using a TES 668™ or TES 295® fluid is 150,000 miles/240 000 km/6000 hours or 48 months whichever occurs first. Using Table 3 Hours vs. Miles, a vehicle operating at 7 mph (11 km/h) will travel approximately 42,000 miles (66 000 km) in 6000 hours. If an odometer is used to determine when to change the transmission fluid and filters, this specific vehicle would change the fluid every 42,000 miles (66 000 km) and filters every 21,000 miles (33 000 km).

Estimating average mph can be approximated by dividing total distance traveled in a typical day by the hours elapsed during that total distance. An example would be a vehicle that operates on average 96 miles (155 km) a day over an 8 hour period would average 12 mph (19 km/h).

Copyright © 2021 Allison Transmission, Inc. All Rights Reserved.

Table 2. 2000 and 3000 Hour Based Maintenance — Hours vs. Miles

2000 Hour Based Maintenance				3000 Hour Based Maintenance			
km/h Average	km Equivalent	MPH Average	miles Equivalent	km/h Average	km Equivalent	MPH Average	miles Equivalent
5	10000	3	6000	5	15000	3	9000
6	12000	4	8000	6	18000	4	12000
8	16000	5	1000	8	24000	5	15000
10	20000	6	12000	10	30000	6	18000
11	22000	7	14000	11	33000	7	21000
13	26000	8	16000	13	39000	8	24000
14	28000	9	18000	14	42000	9	27000
16	32000	10	20000	16	48000	10	30000
18	36000	11	22000	18	54000	11	33000
19	38000	12	24000	19	57000	12	36000
21	42000	13	26000	21	63000	13	39000
23	46000	14	28000	23	69000	14	42000
24	48000	15	30000	24	72000	15	45000
26	52000	16	32000	26	78000	16	48000
27	54000	17	34000	27	81000	17	51000
29	58000	18	36000	29	87000	18	54000
31	62000	19	38000	31	93000	19	57000
32	64000	20	40000	32	96000	20	60000
34	68000	21	42000	34	102000	21	63000
35	70000	22	44000	35	105000	22	66000
37	74000	23	46000	37	111000	23	69000
39	78000	24	48000	39	117000	24	72000
40	80000	25	50000	40	120000	25	75000

Copyright © 2021 Allison Transmission, Inc. All Rights Reserved.

Table 3. 4000 and 6000 Hour Based Maintenance — Hours vs. Miles

4000 Hour Based Maintenance				6000 Hour Based Maintenance			
km/h Average	km Equivalent	MPH Average	miles Equivalent	km/h Average	km Equivalent	MPH Average	miles Equivalent
5	20000	3	12000	5	30000	3	18000
6	24000	4	16000	6	36000	4	24000
8	32000	5	20000	8	48000	5	30000
10	40000	6	24000	10	60000	6	36000
11	44000	7	28000	11	66000	7	42000
13	52000	8	32000	13	78000	8	48000
14	56000	9	36000	14	84000	9	54000
16	64000	10	40000	16	96000	10	60000
18	72000	11	44000	18	108000	11	66000
19	76000	12	48000	19	114000	12	72000
21	84000	13	52000	21	126000	13	78000
23	92000	14	56000	23	138000	14	84000
24	96000	15	60000	24	144000	15	90000
26	104000	16	64000	26	156000	16	96000
27	108000	17	68000	27	162000	17	102000
29	116000	18	72000	29	174000	18	108000
31	124000	19	76000	31	186000	19	114000
32	128000	20	80000	32	192000	20	120000
34	136000	21	84000	34	204000	21	126000
35	140000	22	88000	35	210000	22	132000
37	148000	23	92000	37	222000	23	138000
39	156000	24	96000	39	234000	24	144000
40	160000	25	100000	40	240000	25	150000

Copyright © 2021 Allison Transmission, Inc. All Rights Reserved.

Table 4. Filter/Fluid Change Intervals/Fluid Capacities

1000/ 2000 Series	Filter	Change Intervals	Refer to Appendix A
		Filter Types and Part Numbers	Refer to Appendix A
	Fluid	Change Intervals	Refer to Appendix A
		Fluid Capacity	Refer to Appendix A
3000/ 4000 Series	Filter	Change Intervals	Refer to Appendix B
		Filter and Gasket Kits	Refer to Appendix B
	Fluid	Change Intervals	Refer to Appendix B
		Fluid Capacity	Refer to Appendix B
		Additional Fill for Allison Coolers/Accumulators	Refer to Appendix B
TC10	Filter	Change Intervals	Refer to Appendix C
		Filter and Gasket Kits	Refer to Appendix C
	Fluid	Change Intervals	Refer to Appendix C
		Fluid Capacity	Refer to Appendix C
H 40/ 50 EP™ Products	Filter	Change Intervals	Refer to Appendix D
		Filter and Gasket Kits	Refer to Appendix D
	Fluid	Change Intervals	Refer to Appendix D
		Fluid Capacity	Refer to Appendix D
AT 500 Series	Filter	Change Intervals	Refer to Appendix E
		Filter and Gasket Kits	Refer to Appendix E
	Fluid	Change Intervals	Refer to Appendix E
		Fluid Capacity	Refer to Appendix E
MT 600 Series	Filter	Change Intervals	Refer to Appendix F
		Filter and Gasket Kits	Refer to Appendix F
	Fluid	Change Intervals	Refer to Appendix F
		Fluid Capacity	Refer to Appendix F
HT 700 Series	Filter	Change Intervals	Refer to Appendix G
		Filter and Gasket Kits	Refer to Appendix G
	Fluid	Change Intervals	Refer to Appendix G
		Fluid Capacity	Refer to Appendix G

Copyright © 2021 Allison Transmission, Inc. All Rights Reserved.

Appendix A. 1000/2000 Filter Change/Fluid Change Intervals

Table 5. Recommended Filter Change/Fluid Intervals

NOTE: Refer to Table 6 for Filter Type/Part Number Information and Table 7 for Fluid Capacity Information.

NOTE: Change fluid and filters at or before recommended mileage, months, or hours have elapsed, whichever occurs first.

NOTE: Local conditions, severity of operation or duty cycle may require more or less frequent fluid change intervals that differ from the published recommended fluid change intervals of Allison Transmission. Allison Transmission recommends that customers use fluid analysis as the primary method for determining fluid change intervals. In the absence of a fluid analysis program the fluid change intervals listed in the charts should be used.

1000/2000 Series Fluid And Filter Change Interval Recommendations						
			Prognostics Turned Off or Not Calibrated in TCM		Prognostics Turned On	
		Duty Cycle	Allison Approved TES 668™ and/or TES 295® Fluid	Allison Approved TES 389® Fluid	Allison Approved TES 668™ and/or TES 295® Fluid	Allison Approved TES 389® Fluid
Fluid		General*	150,000 Miles (240,000 km) 4,000 Hours 48 Months	50,000 Miles (80,000 km) 2,000 Hours 24 Months	When indicated by controller or 48 months, whichever occurs first	When indicated by controller or 24 months, whichever occurs first (MY2010)
		Severe**	75,000 Miles (120,000 km) 3,000 Hours 36 Months	12,000 Miles (20,000 km) 500 Hours 6 Months		
Filters	Spin-On Control Main Filter	General*	50,000 Miles (80,000 km) 2,000 Hours 24 Months	50,000 Miles (80,000 km) 2,000 Hours 24 Months	When indicated by controller or 48 months, whichever occurs first	When indicated by controller or 24 months, whichever occurs first (MY2010)
		Severe**	50,000 Miles (80,000 km) 2,000 Hours 24 Months	12,000 Miles (20,000 km) 500 Hours 6 Months		
	Internal Filter	All	Overhaul	Overhaul	Overhaul	Overhaul

NOTE: TES 389® cannot be used in MY09.

NOTE: Anything less than 100 percent concentration of TES 668™ and/or TES 295® Allison approved fluids is considered a mixture and should utilize Schedule One TES 389® change intervals. Also, mixtures shall not be used with Prognostics.

* General Vocation: All vocations not classified as Severe
** Severe Vocation: On/Off Highway, Refuse, City Transit, Shuttle Transit

Copyright © 2021 Allison Transmission, Inc. All Rights Reserved.

Table 6. Filter Type/Part Number

Filters	
Filter Type	**Part Number**
Control Main	29539579
Pan Suction (Shallow)*	29542833, 29537965**
Pan Suction (Deep)*	29542824

* Overhaul Only
** See SIL 12-1K2K-10, Interchangeability of the Shallow Sump Filters

Table 7. Fluid Capacity

NOTE: Approximate Fluid Loss for Control Main Filter (Spin-On) = 0.47 liters (1 pint)

Capacities (Approximate) *		
Sump Type	Initial Fill**	Refill**
	Liters (Quarts)	Liters (Quarts)
Standard	14 (14.8)	10 (10.6)
Shallow	12 (12.7)	7 (7.4)

* Fluid fill capacity is dependent on vehicle configuration. Final fluid capacity must be determined by dipstick level (see Mechanic's Tips MT3190EN, MT4007EN Section 1 or your Operator's Manual under "Care and Maintenance".
** Approximate quantities, do not include external lines, cooler, and hoses.

Copyright © 2021 Allison Transmission, Inc. All Rights Reserved.

Appendix B. 3000/4000 Filter Change/Fluid Change Intervals

Table 8. Recommended Filter Change/Fluid Change Intervals

NOTE: Refer to Table 9 for Filter and Gasket Kit Information, Table 10 for Fluid Capacity Information, Table 11 for Additional Fill for Allison Coolers/Accumulators, and Figure 1 for Drain Plug Location, Filter Locations, and Control Module Dimensions.

NOTE: Change fluid and filters at or before recommended mileage, months, or hours have elapsed, whichever occurs first.

NOTE: Local conditions, severity of operation or duty cycle may require more or less frequent fluid change intervals that differ from the published recommended fluid change intervals of Allison Transmission. Allison Transmission recommends that customers use fluid analysis as the primary method for determining fluid change intervals. In the absence of a fluid analysis program the fluid change intervals listed in the charts should be used.

3000/4000 Series Fluid And Filter Change Interval Recommendations					
		Prognostics Turned Off or Not Calibrated in TCM		Prognostics Turned On	
	Duty Cycle	Allison Approved TES 668™ and/or TES 295® Fluid	Allison Approved TES 389® Fluid	Allison Approved TES 668™ and/or TES 295® Fluid	Allison Approved TES 389® Fluid
Fluid	General*	300,000 Miles (480,000 km) 6,000 Hours 48 Months	25,000 Miles (40,000 km) 1,000 Hours 12 Months	When indicated by controller or 60 months, whichever occurs first	When indicated by controller or 24 months, whichever occurs first
	Severe**	150,000 Miles (240,000 km) 6,000 Hours 48 Months	12,000 Miles (20,000 km) 500 Hours 6 Months		
* General Vocation: All vocations not classified as Severe ** Severe Vocation: On/Off Highway, Refuse, City Transit, Shuttle Transit					

Copyright © 2021 Allison Transmission, Inc. All Rights Reserved.

Table 8. Recommended Filter Change/Fluid Change Intervals *(cont'd)*

3000/4000 Series Fluid And Filter Change Interval Recommendations						
			Prognostics Turned Off or Not Calibrated in TCM		Prognostics Turned On	
		Duty Cycle	Allison Approved TES 668™ and/or TES 295® Fluid	Allison Approved TES 389® Fluid	Allison Approved TES 668™ and/or TES 295® Fluid	Allison Approved TES 389® Fluid
Filters	Main Filter	General*	75,000 Miles (120,000 km) 3,000 Hours 36 Months	25,000 Miles (40,000 km) 1,000 Hours 12 Months	When indicated by controller or 60 months, whichever occurs first	When indicated by controller or 24 months, whichever occurs first
		Severe**	75,000 Miles (120,000 km) 3,000 Hours 36 Months	12,000 Miles (20,000 km) 500 Hours 6 Months		
	Internal Filter	All	Overhaul	Overhaul	Overhaul	Overhaul
	Lube/ Auxiliary Filter	General*	75,000 Miles (120,000 km) 3,000 Hours 36 Months	25,000 Miles (40,000 km) 1,000 Hours 12 Months	When indicated by controller or 60 months, whichever occurs first	When indicated by controller or 24months, whichever occurs first
		Severe**	75,000 Miles (120,000 km) 3,000 Hours 36 Months	12,000 Miles (20,000 km) 500 Hours 6 Months		

NOTE: TES 389® cannot be used in MY09.

NOTE: Anything less than 100 percent concentration of TES 668™ and/or TES 295® Allison approved fluids is considered a mixture and should utilize Schedule One TES 389® change intervals. Also, mixtures shall not be used with Prognostics.

* General Vocation: All vocations not classified as Severe
** Severe Vocation: On/Off Highway, Refuse, City Transit, Shuttle Transit

Table 9. Filter and Gasket Kits

NOTE: Refer to Figure 1 for Filter Locations, and Control Module Dimensions.

Filter and Gasket Kits	
Kit Description	**Filter (High-Capacity)**
Filter Kit, 4” Service Filters for 2” or 7” sump	29558328
Filter Kit, 6” Service Filters for 4” sump	29558329

Copyright © 2021 Allison Transmission, Inc. All Rights Reserved.

NOTE: Square cut filter cover O-rings P/N 29501469 are no longer included in High-Capacity Filter Kits P/N 29558328 and P/N 29558329. When servicing former filter covers P/N 29507434, the required square cut filter cover O-rings must be ordered separately. Square cut filter cover O-rings were originally used in transmissions manufactured prior to January 22, 1996, prior to 3000 Series Product Family. S/N 6510069120 or 4000 Series Product Family S/N 6610009730. Former filter covers can be identified by the part number cast on the exterior side of the filter cover. Any 3000 and 4000 Series Product Family transmissions with the former filter cover requires one square cut filter cover O-ring (4) and one O-ring (5) (refer to Figure 1) per filter cover. O-ring (5) is included in the aforementioned high-capacity filter kits. Some remanufactured transmissions may require the use of square cut O-rings if equipped with the former filter covers.

Table 10. Fluid Capacity

Fluid Capacities (Approximate)*			
Transmissions Fluid Loss — Filter Change Only: Main Filter = 1.9 liters (2 quarts) Lube Filter = 7.6 liters (8 quarts)			
Model	Sump	Initial Fill**	Refill**
		Liters (Quarts)	Liters (Quarts)
3000	4 inch	27 (29)	18 (19)
3000	2 inch	25 (26)	16 (17)
4000	4 inch***	45 (48)	37 (39)
4000	2 inch***	38 (40)	30 (31)

* Fluid fill capacity is dependent on vehicle configuration. Final fluid capacity must be determined by dipstick level (see Mechanic's Tips MT3004EN Section 1 or your Operator's Manual under "Care and Maintenance".
** Approximate quantities, do not include external lines, cooler, and hose
*** Add 2.8 Liters (3 Quarts) for Transmissions with PTO

Table 11. Additional Fill for Allison Coolers/Accumulators

Additional Fill for Allison Coolers/Accumulators		
Product Family	**Cooler Type**	**Liters (Quarts)**
3000/4000	Non-Retarder Direct Mount	1.0 (1.1)
3000/4000	Remote/Retarder/Sump	2.5 (2.6)
3000	Retarder Accumulator	1.2 (1.3)
4000	Direct Mount/Retarder	2.1 (2.2)
4000	Retarder Accumulator	0.6 (0.6)

Copyright © 2021 Allison Transmission, Inc. All Rights Reserved.

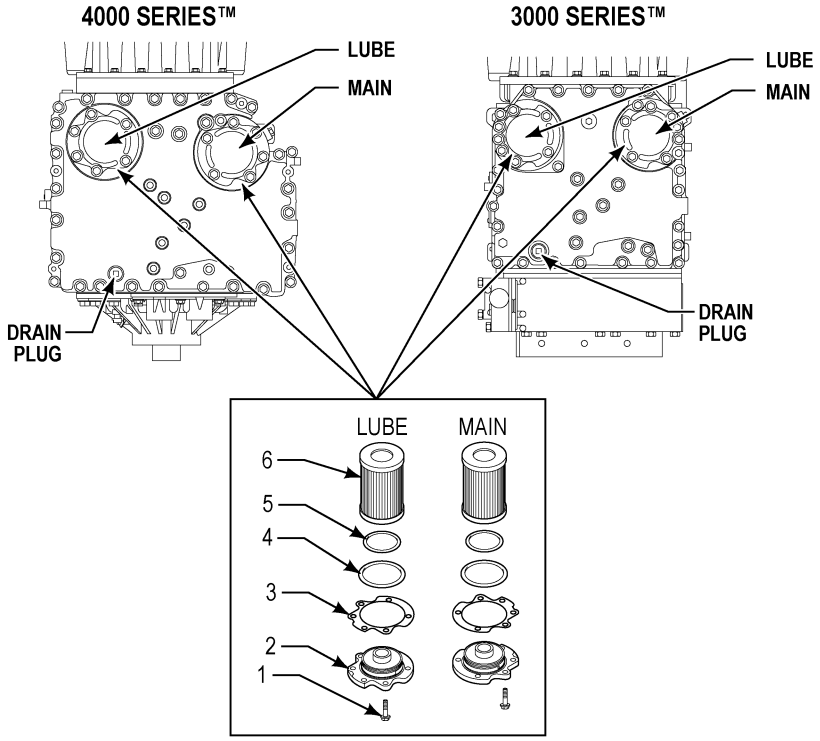

NOTE: Torque all filter cover retaining bolts to 51-61 N•m (38-45 lb ft)
NOTE: Main and Lube Filter designations cast into bottom of Control Module
NOTE: O-Ring #4 is no longer included in high capacity filter kits.

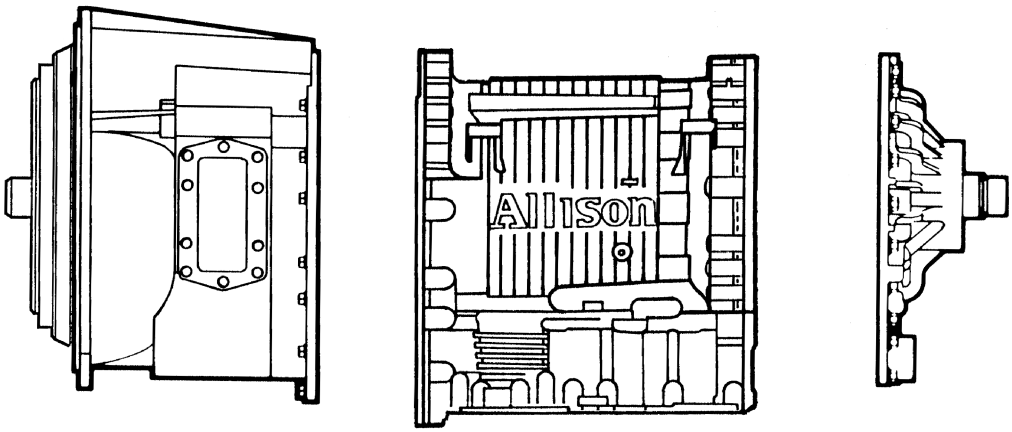

* 4 inch Control Module Measures 3.5 inch approximately
2 inch Control Module Measures 1.75 inch approximately

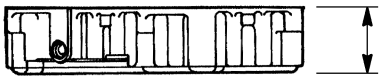

REFERENCED* DIMENSION

5308987

Figure 1. Drain Plug/Filter Location and Control Module Dimensions

Copyright © 2021 Allison Transmission, Inc. All Rights Reserved.

Appendix C. TC10 Filter Change/Fluid Change Intervals

Table 12. Recommended Filter Change/Fluid Change Intervals

NOTE: Refer to Table 13 for Filter and Gasket Kit Information, Table 14 for Fluid Capacity Information, and Figure 2 for Drain Plug and Filter Locations.

NOTE: Change fluid and filters at or before recommended mileage, months, or hours have elapsed, whichever occurs first.

NOTE: Local conditions, severity of operation or duty cycle may require more or less frequent fluid change intervals that differ from the published recommended fluid change intervals of Allison Transmission. Allison Transmission recommends that customers use fluid analysis as the primary method for determining fluid change intervals. In the absence of a fluid analysis program the fluid change intervals listed in the charts should be used.

TC10®Tractor Series Fluid And Filter Change Interval Recommendations				
			Prognostics Turned Off or Not Calibrated in TCM	**Prognostics Turned On**
		Duty Cycle	**Allison Approved TES 295®* Fluid**	**Allison Approved TES 295®* Fluid**
Fluid		General	500,000 Miles (804,700 km) 20,000 Hours 60 Months	When indicated by controller or 60 months, whichever occurs first
FIters	**Internal Filter**	General	Overhaul	Overhaul
	Lube/ Auxiliary Filter	General	500,000 Miles (804,700 km) 20,000 Hours 60 Months	When indicated by controller or 60 months, whichever occurs first
*100 Percent Concentration Allison Approved TES 295® Fluid and Allison Filters — Required				

Table 13. Filter and Gasket Kits

NOTE: Refer to Figure 2 for Filter Location.

Filter and Gasket Kits	
Description	**Part Number**
Kit - Oil Filter	29554653
Oil Filter*	29558295
O-Ring, Cover *	29554650
Seal, Drain Plug *	24205123
Instruction Sheet # 350 *	29554750
Internal Suction Filter**	29551998
*Included in the Oil Filter Kit **Overhaul Only	

Copyright © 2021 Allison Transmission, Inc. All Rights Reserved.

Table 14. Fluid Capacity

Capacities (Approximate) *		
Model	Initial Fill **	Refill **
	Liters (Quarts)	Liters (Quarts)
TC10	49 (52)	38 (40)

* Fluid fill capacity is dependent on vehicle configuration. Final fluid capacity must be determined by dipstick level (refer to Mechanic's Tips MT7119EN Section 2 or your Operator's Manual OM7118EN under "Care and Maintenance").
** Approximate quantities, do not include external circuits.

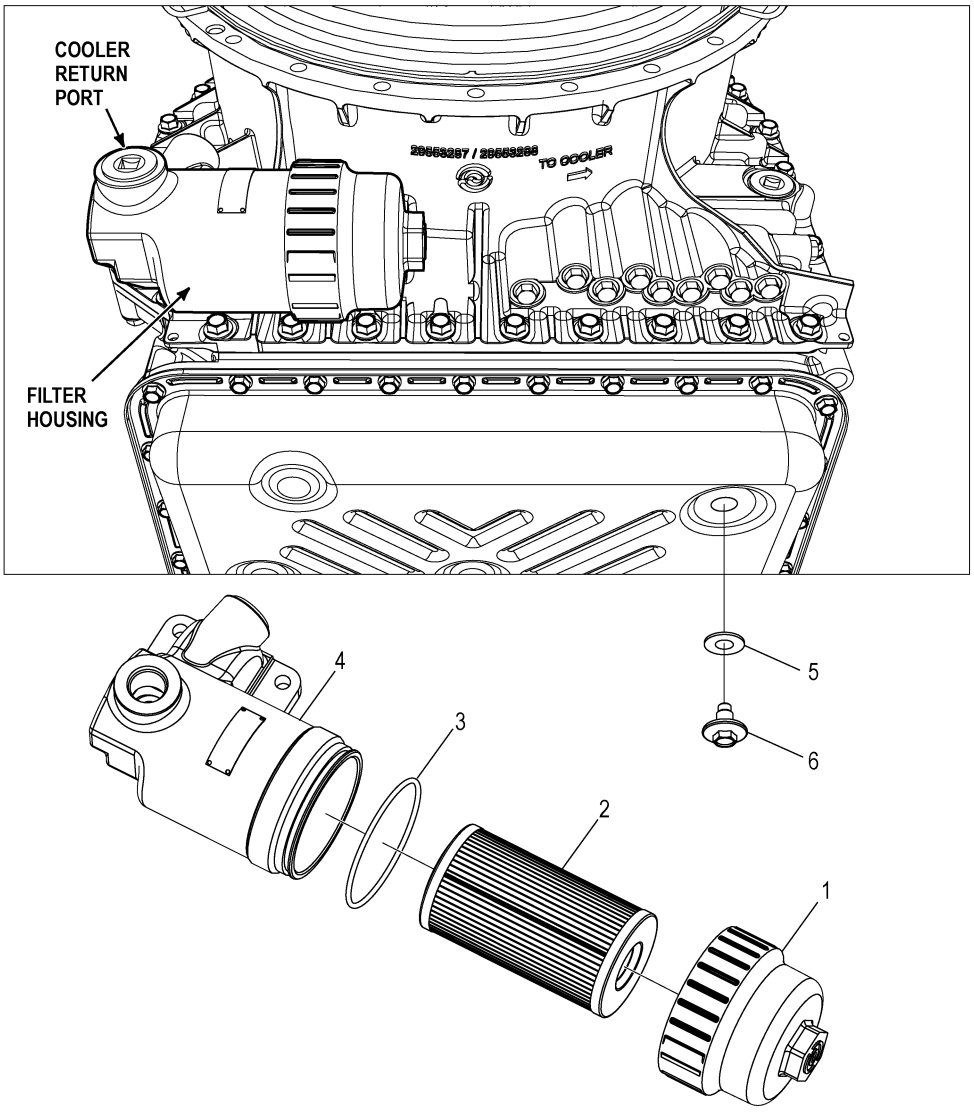

Figure 2. Drain Plug and Filter Locations

Copyright © 2021 Allison Transmission, Inc. All Rights Reserved.

Appendix D. H 40/50 EP Filter Change/Fluid Change Intervals

Table 15. Recommended Filter Change/Fluid Change Intervals

NOTE: Refer to Figure 3 for Drain Plug and Filter Locations.

NOTE: Change filters/fluid at or before recommended mileage or months have elapsed, whichever occurs first.

NOTE: H 40/50 EP™ Drive Unit Drive Unit Lube Filter extended time change intervals are only valid with the use of Allison Transmission High-Capacity filters. High-Capacity filters implemented into production starting with S/N 7110001551.

NOTE: Local conditions, severity of operation or duty cycle may require more or less frequent fluid change intervals that differ from the published recommended fluid change intervals of Allison Transmission. Allison Transmission recommends that customers use fluid analysis as the primary method for determining fluid change intervals. In the absence of a fluid analysis program the fluid change intervals listed in the charts should be used.

H 40/50 EP Fluid And Filter Change Interval Recommendations			
		Duty Cycle	**Allison Approved TES 468™* Fluid**
Fluid		General	100,000 Miles (160,000 km) or 48 Months
FIters	**Control Main Filter**	Intial	5,000 Miles (8,000 km) or 200 Hours
		After Intial	50,000 Miles (80,000 km) or 24 Months
	Lube Filter	High Capacity	100,000 Miles (160,000 km) or 48 Months
	Sump/Internal Filter	General	Overhaul
*100 Percent Concentration Allison Approved TES 468™ Fluid and Allison Filters — Required			

Table 16. Filter and Gasket Kits

NOTE: Refer to Figure 3 for Drain Plug and Filter Locations.

Filter and Gasket Kits	
Description	**Part Number**
Lube Filter and Gasket Kit	29545785
Control Main Filter	29539579

Copyright © 2021 Allison Transmission, Inc. All Rights Reserved.

Table 17. Fluid Capacity

NOTE: Refer to Figure 3 for Drain Plug and Filter Locations.

Capacities (Approximate) *	
Transmissions Fluid Loss — Filter Change Only: Control Main filter = 0.94 liters (1 quart) Lube Filter = 2.84 liters (3 quarts)	
Model	Refill**
	Liters (Quarts)
H 40/50 EP™ Drive Unit Drive Unit	15.1 (16)
* Fluid fill capacity is dependent on vehicle configuration. ** Approximate quantities, do not include DPIM, cooler, and external lines.	

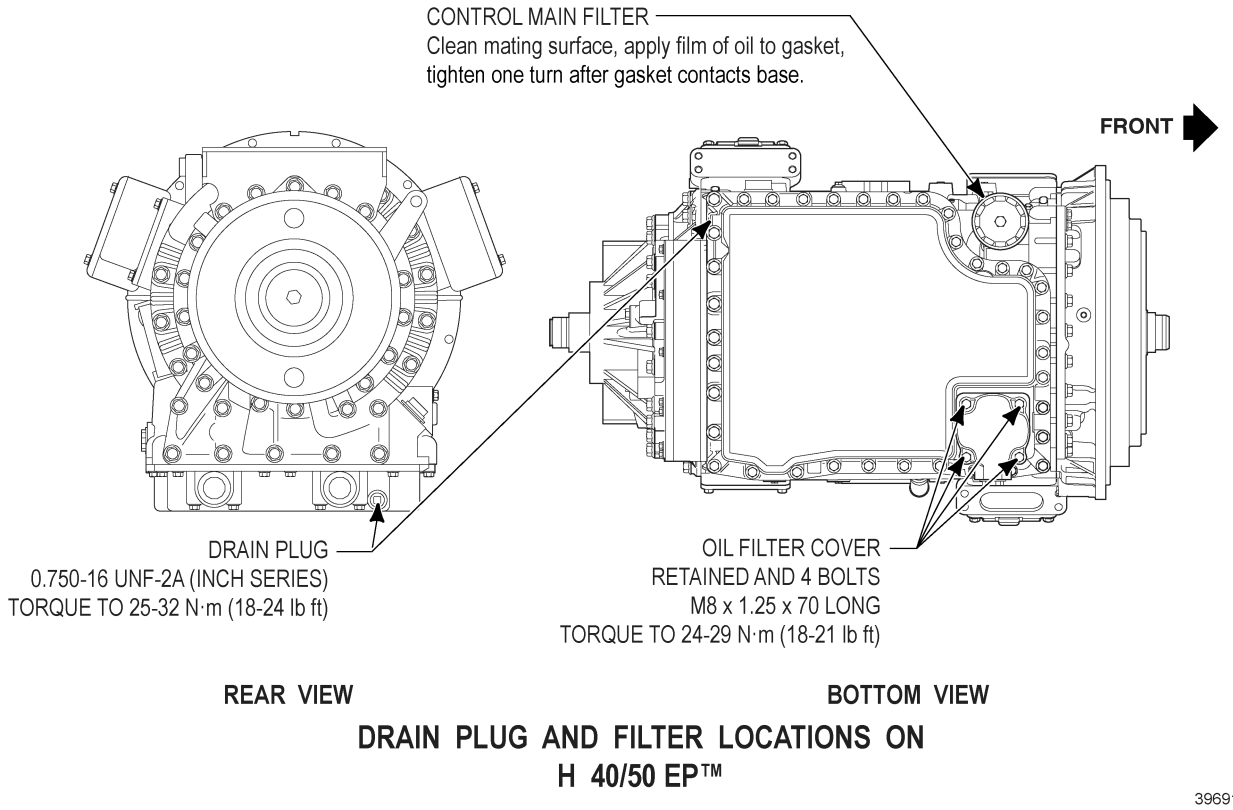

Figure 3. Drain Plug and Filter Locations

Copyright © 2021 Allison Transmission, Inc. All Rights Reserved.

Appendix E. AT 500 Series Filter Change/Fluid Change Intervals

Table 18. Recommended Filter Change Intervals

NOTE: Refer to Table 19 for Fluid Change Intervals, Table 20 for Filter and Gasket Kit Information and Table 21 for Fluid Capacity Information.

NOTE: Change filters at or before recommended mileage, months, or hours have elapsed, whichever occurs first.

<table>
<tr><th colspan="8">Filter Change Intervals</th></tr>
<tr><th colspan="4">100 Percent Concentration Allison Approved TES 295® Fluids*</th><th colspan="4">Allison Approved TES 389® Fluids*</th></tr>
<tr><th colspan="2">Internal Filter</th><th colspan="2">Lube/Auxiliary Filter</th><th colspan="2">Internal Filter</th><th colspan="2">Lube/Auxiliary Filter</th></tr>
<tr><td>General***</td><td>Severe****</td><td colspan="2">Initial
5000 Miles (8000 km)
200 Hours</td><td>General***</td><td>Severe****</td><td colspan="2">Initial
5000 Miles (8000 km)
200 Hours</td></tr>
<tr><td colspan="2">Polyester Filter**</td><td>General***†</td><td>Severe****†</td><td colspan="2">Polyester Filter**</td><td>General***†</td><td>Severe****†</td></tr>
<tr><td>Overhaul</td><td>Overhaul</td><td rowspan="3">50,000 Miles
(80 000 km)
2000 Hours
24 Months</td><td rowspan="3">25,000 Miles
(40 000 km)
1000 Hours
12 Months</td><td>Overhaul</td><td>Overhaul</td><td rowspan="3">25,000 Miles
(40 000 km)
1000 Hours
12 Months</td><td rowspan="3">12,000 Miles
(20 000 km)
500 Hours
6 Months</td></tr>
<tr><td colspan="2">Wire Mesh Filter</td><td colspan="2">Wire Mesh Filter</td></tr>
<tr><td>100,000 Miles
(160 000 km)
4000 Hours
48 Months</td><td>50,000 Miles
(80 000 km)
2000 Hours
24 Months</td><td>25,000 Miles
(40 000 km)
1000 Hours
12 Months</td><td>12,000 Miles
(20 000 km)
500 Hours
6 Months</td></tr>
<tr><td colspan="8">See www.allisontransmission.com for a list of Allison Approved TES 389® fluids.</td></tr>
</table>

* Anything other than 100 percent concentration of Allison Approved TES 295® fluid is considered a mixture and should utilize Allison Approved TES 389® fluids change intervals.
*** General Vocation: less than one (1) stop per mile.
**** Severe Vocation: more than one (1) stop per mile.
** For additional information regarding the polyester internal filter see the latest revision of SIL 9-TR-01.
† When an Allison recommended high-efficiency filter is used, the change interval is not until the Change Filter light indicates the filter is contaminated or until it has been in use for 3 years, whichever occurs first. No mileage restrictions apply. High-efficiency filters are only approved for use with AT/MT/HT Series.

Copyright © 2021 Allison Transmission, Inc. All Rights Reserved.

Table 19. Recommended Fluid Change Intervals

NOTE: Refer to Table 18 for Filter Change Intervals, Table 20 for Filter and Gasket Kit Information and Table 21 for Fluid Capacity Information.

NOTE: Change fluid at or before recommended mileage, months, or hours have elapsed, whichever occurs first.

NOTE: Local conditions, severity of operation or duty cycle may require more or less frequent fluid change intervals that differ from the published recommended fluid change intervals of Allison Transmission. Allison Transmission recommends that customers use fluid analysis as the primary method for determining fluid change intervals. In the absence of a fluid analysis program the fluid change intervals listed in the charts should be used.

Fluid Change Intervals			
100 Percent Concentration Allison Approved TES 295® Fluids*		**Allison Approved TES 389® Fluids***	
General**	**Severe*****	**General****	**Severe*****
100,000 Miles (160 000 km) 4000 Hours 48 Months	50,000 Miles (80 000 km) 2000 Hours 24 Months	25,000 Miles (40 000 km) 1000 Hours 12 Months	12,000 Miles (20 000 km) 500 Hours 6 Months
See *www.allisontransmission.com* for a list of Allison Approved TES 389® fluids.			

* Anything other than 100 percent concentration of Allison Approved TES 295® fluid is considered a mixture and should utilize Allison Approved TES 389® fluids change intervals.
** General Vocation: less than one (1) stop per mile.
*** Severe Vocation: more than one (1) stop per mile.

Table 20. Filter and Gasket Kits

NOTE: See the latest revision of SIL 9-TR-01 for additional information.

Filter and Gasket Kits	
Pan	**Oil Filter and Gasket Kit Part Number**
97 mm (3.8 inch) oil pan	29540976
135 mm (5.3 inch) oil pan	29538489

Table 21. Fluid Capacity

Capacities (Approximate)*	
Pan Depth	Initial Fill**
	Liters (Quarts)
97 mm (3.8 inch) oil pan	8.5 (9)
135 mm (5.3 inch) oil pan	15 (16)

* Fluid fill capacity is dependent on vehicle configuration. Final fluid capacity must be determined by dipstick level (see Mechanic's Tips MT1321EN Section 1 or your Operator's Manual under "Care and Maintenance"
** Approximate quantities, do not include external lines and cooler hose

Copyright © 2021 Allison Transmission, Inc. All Rights Reserved.

Appendix F. MT 600 Series Filter Change/Fluid Change Intervals

Table 22. Recommended Filter Change Intervals

NOTE: Refer to Table 23 for Fluid Change Intervals, Table 24 for Filter and Gasket Kit Information, and Table 25 for Fluid Capacity Information.

NOTE: Change filters at or before recommended mileage, months, or hours have elapsed, whichever occurs first.

NOTE: Local conditions, severity of operation or duty cycle may require more or less frequent fluid change intervals that differ from the published recommended fluid change intervals of Allison Transmission. Allison Transmission recommends that customers use fluid analysis as the primary method for determining fluid change intervals. In the absence of a fluid analysis program the fluid change intervals listed in the charts should be used.

Filter Change Intervals							
100 Percent Concentration Allison Approved TES 295® Fluids *				**Allison Approved TES 389® Fluids ***			
Internal Filter		**Lube/Auxiliary Filter**		**Internal Filter**		**Lube/Auxiliary Filter**	
General**	**Severe*****	**Initial** 5000 Miles (8000 km) 200 Hours		**General****	**Severe*****	**Initial** 5000 Miles (8000 km) 200 Hours	
Overhaul	Overhaul	**General**†**	**Severe***†**	Overhaul	Overhaul	**General**†**	**Severe***†**
		50,000 Miles (80 000 km) 2000 Hours 24 Months	25,000 Miles (40 000 km) 1000 Hours 12 Months			25,000 Miles (40 000 km) 1000 Hours 12 Months	12,000 Miles (20 000 km) 500 Hours 6 Months
See *www.allisontransmission.com* for a list of Allison Approved TES 389® fluids.							

* Anything other than 100 percent concentration Allison Approved TES 295® fluid is considered a mixture and should utilize Allison Approved TES 389® fluids change intervals.
** General Vocation: less than one (1) stop per mile.
*** Severe Vocation: more than one (1) stop per mile.
† When an Allison recommended high-efficiency filter is used, the change interval is not until the Change Filter light indicates the filter is contaminated or until it has been in use for 3 years, whichever occurs first. No mileage restrictions apply. High-efficiency filters are only approved for use with AT/MT/HT Series.

Copyright © 2021 Allison Transmission, Inc. All Rights Reserved.

Table 23. Recommended Fluid Change Intervals

NOTE: Refer to Table 22 for Filter Change Intervals, Table 24 for Filter and Gasket Kit Information, and Table 25 for Fluid Capacity Information.

NOTE: Change fluid at or before recommended mileage, months, or hours have elapsed, whichever occurs first.

NOTE: Local conditions, severity of operation or duty cycle may require more or less frequent fluid change intervals that differ from the published recommended fluid change intervals of Allison Transmission. Allison Transmission recommends that customers use fluid analysis as the primary method for determining fluid change intervals. In the absence of a fluid analysis program the fluid change intervals listed in the charts should be used.

Fluid Change Intervals			
100 Percent Concentration Allison Approved TES 295® Fluids *		**Allison Approved TES 389® Fluids ***	
General**	**Severe*****	**General****	**Severe*****
100,000 Miles (160 000 km) 4000 Hours 48 Months	50,000 Miles (80 000 km) 2000 Hours 24 Months	25,000 Miles (40 000 km) 1000 Hours 12 Months	12,000 Miles (20 000 km) 500 Hours 6 Months
See *www.allisontransmission.com* for a list of Allison Approved TES 389® fluids.			

*Anything other than 100 percent concentration Allison Approved TES 295® fluid is considered a mixture and should utilize Allison Approved TES 389® fluids change intervals.
** General Vocation: less than one (1) stop per mile.
***Severe Vocation: more than one (1) stop per mile.

Table 24. Filter and Gasket Kit

NOTE: See the latest revision of SIL 4-TR-01 for additional information.

Filter and Gasket Kit
Oil Filter and Gasket Kit Part Number
29538489

Table 25. Fluid Capacity

Capacities (Approximate) *	
Pan Depth	Initial Fill**
	Liters (Quarts)
110 mm (4.3 inch) oil pan	11 (12)
130 mm (5.1 inch) oil pan	14 (15)

* Fluid fill capacity is dependent on vehicle configuration. Final fluid capacity must be determined by dipstick level (see Mechanic's Tips MT1357EN Section 1 or your Operator's Manual under "Care and Maintenance"
** Approximate quantities, do not include external lines and cooler hose

Copyright © 2021 Allison Transmission, Inc. All Rights Reserved.

Appendix G. HT 700 Series Filter Change/Fluid Change Intervals

Table 26. Recommended Filter Change Intervals

NOTE: Refer to Table 27 for Fluid Change Intervals, Table 28 for Filter and Gasket Kit Information, and Table 29 for Fluid Capacity Information.

NOTE: Change filters at or before recommended mileage, months, or hours have elapsed, whichever occurs first.

Filter Change Intervals									
100 Percent Concentration Allison Approved TES 295® Fluids*					**Allison Approved TES 389® Fluids***				
Main Filter		**Internal Filter**	**Lube/Auxiliary Filter**		**Main Filter**		**Internal Filter**	**Lube/Auxiliary Filter**	
General**	**Severe*****	Overhaul	**Initial** 5000 Miles (8000 km) 200 Hours		**General****	**Severe*****	Overhaul	**Initial** 5000 Miles (8000 km) 200 Hours	
			General**†	**Severe*****†				**General****†	**Severe*****†
50,000 Miles (80 000 km) 2000 Hours 24 Months	25,000 Miles (40 000 km) 1000 Hours 12 Months		50,000 Miles (80 000 km) 2000 Hours 24 Months	25,000 Miles (40 000 km) 1000 Hours 12 Months	25,000 Miles (40 000 km) 1000 Hours 12 Months	12,000 Miles (20 000 km) 500 Hours 6 Months		25,000 Miles (40 000 km) 1000 Hours 12 Months	12,000 Miles (20 000 km) 500 Hours 6 Months
See *www.allisontransmission.com* for a list of Allison Approved TES 389® fluids									

* Anything other than 100 percent concentration of Allison Approved TES 295® fluid is considered a mixture and should utilize Allison Approved TES 389® fluids change intervals.
** General Vocation: less than one (1) stop per mile.
*** Severe Vocation: more than one (1) stop per mile.
† When an Allison recommended high-efficiency filter is used, the change interval is not until the Change Filter light indicates the filter is contaminated or until it has been in use for 3 years, whichever occurs first. No mileage restrictions apply. High-efficiency filters are only approved for use with AT/MT/HT Series.

Copyright © 2021 Allison Transmission, Inc. All Rights Reserved.

Table 27. Recommended Fluid Change Intervals

NOTE: Refer to Table 26 for Filter Change Intervals, Table 28 for Filter and Gasket Kit Information, and Table 29 for Fluid Capacity Information.

NOTE: Change fluid at or before recommended mileage, months, or hours have elapsed, whichever occurs first.

NOTE: Local conditions, severity of operation or duty cycle may require more or less frequent fluid change intervals that differ from the published recommended fluid change intervals of Allison Transmission. Allison Transmission recommends that customers use fluid analysis as the primary method for determining fluid change intervals. In the absence of a fluid analysis program the fluid change intervals listed in the charts should be used.

Fluid Change Intervals			
100 Percent Concentration Allison Approved TES 295® Fluids *		**Allison Approved TES 389® Fluids***	
General**	**Severe*****	**General****	**Severe*****
100,000 Miles (160 000 km) 4000 Hours 48 Months	50,000 Miles (80 000 km) 2000 Hours 24 Months	25,000 Miles (40 000 km) 1000 Hours 12 Months	12,000 Miles (20 000 km) 500 Hours 6 Months
See *www.allisontransmission.com* for a list of Allison Approved TES 389® fluids			

*Anything other than 100 percent concentration of Allison Approved TES 295® fluid is considered a mixture and should utilize Allison Approved TES 389® fluids change intervals.
**General Vocation: less than one (1) stop per mile.
***Severe Vocation: more than one (1) stop per mile.

Table 28. Filter and Gasket Kit

Filter and Gasket Kits	
Pan	**Filter and Gasket Kit Part Number**
114 mm (4.5 inch) Oil Pan	29530562
114 mm (4.5 inch) Oil Pan (With adapter 23016883 and pan 23016884)	29530563
152 mm (6 inch) Oil Pan	6839945
178 mm (7 inch) Oil Pan	29530564
216 mm (8.5 inch) Hydraulic Oil Pan	23012407
216 mm (8.5 inch) Electronic Oil Pan	29530565

Copyright © 2021 Allison Transmission, Inc. All Rights Reserved.

Table 29. Fluid Capacities

Capacities (Approximate)*	
Pan Depth	Refill**
	Liters (Quarts)
114 mm (4.5 inch) oil pan	32 (34)
152 mm (6 inch) oil pan	28.5 (30)
178 mm (7 inch) oil pan	31 (33)
216 mm (8.5 inch) oil pan	40.5 (42.8)

* Fluid fill capacity is dependent on vehicle configuration. Final fluid capacity must be determined by dipstick level (see Mechanic's Tips MT1366EN (Hydraulic Controls) or MT1958EN (Electronics Controls) Section 1 or your Operator's Manual under "Care and Maintenance"
** Approximate quantities, do not include external lines, and cooler hose

Copyright © 2021 Allison Transmission, Inc. All Rights Reserved.