ST
SERVICE TIP

Allison Transmission

Revisions to this document are noted by a stripe in the left-hand margin

#1099, Rev. V
January 05, 2021


SUBJECT: Transmission Fluid/Filter Change Recommendations

MODELS AFFECTED: Allison Commercial On-Highway Products, AT 500 Series, MT 600 Series, HT 700 Series, 1000 and 2000 SeriesTransmissions, 3000 Series™ Transmissions (includes B300/400 and T200/300), 4000 Series™ Transmissions (includes B500 and T400/500), TC10®, H 40/50 EP™ Products

## Introduction:

Optimum performance and reliability of heavy-duty automatic transmissions can be noticeably influenced by the type of fluid and filter(s) used and the frequency with which those fluid and filter(s) are changed. Allison Transmission has designed extensive programs including specifications and tests to verify the quality of fluids and consequently have specific fluid and filter change recommendations. Due to field studies, changes in emission requirements, vehicle design, and operating environments, Allison Transmission has realigned recommended fluid and filter change intervals. Heavy-duty Automatic Transmission change intervals have been revised to more closely match today's operating environments.

## Model Year 2009 and 2010 Prognostics:

Prognostics that monitor and maximize fluid and filter life were offered in Model Year 2009 for 1000/2000/3000/4000 Series Transmissions. 3000/4000 Series Transmissions began using Prognostics with serial numbers 6510822005 (3000), 6520099957 (3000), 6610257671 (4000), 6620007438 (4000). 1000/2000 Series Transmission Prognostics were first available in July of 2008 (MY2009). **MY2009 Allison Prognostics must only be used with Allison Approved TES 668™ and TES 295® fluids**. January 2010 Allison Prognostics are compatible with TES 668™, TES 295® and TES 389® approved fluids in 3000/4000 Series Transmissions starting with TCM calibration CIN 4C or later (4C-xxxxx-yyy-z) and all January 2010 1000/2000 Series Transmissions.

All 3000/4000 Series Transmissions utilizing Prognostics require the use of Genuine Allison High-Capacity filters. All 1000/2000 Series Transmissions utilizing Prognostics require the use of Genuine Allison Control Main Spin-On filter, P/N 29539579. 1000/2000/3000/4000 Series Transmissions may or may not have this feature "enabled" or turned ON. This option requires that the OEM provide the wiring necessary and the feature enabled in the TCM. Refer to the appropriate Operator's Manual for the methods of identifying if Prognostics is enabled.

**Refer to Table 4 for Filter/Fluid Change Intervals/Fluid Capacities by Series.**



Copyright © 2021 Allison Transmission, Inc. All Rights Reserved.

## Fluids and Specifications:

Fluid types are defined by applicable performance specification. The following transmission fluid types are approved for use in Allison Commercial On-Highway transmission products.

| Fluid Type | Recommended (Intended) Usage |
|---|---|
| ***TES 668™ and TES 295® Fluids***<br>• See *www.allisontransmission.com* for a list of Allison Approved TES 668™ and TES 295® fluids | • General or severe duty<br>• Extended change interval (2) (required)<br>• Extended Transmission Coverage (ETC) policy (required)<br>• Prognostics (required) MY2009 |
| ***TES 468™ Fluids***<br>• See *www.allisontransmission.com* for a list of Allison Approved TES 468™ fluids | • General duty<br>• Extended Transmission Coverage (ETC) policy (required)<br>• TES 468™ fluids are only used for H 40/50 EP™ Products |
| ***TES 389® Fluids***<br>• Schedule One TES 389®*<br>• Military specification fluids (for use in Military Vehicles Only) (1)<br>• See *www.allisontransmission.com* for a list of Allison Approved TES 389® fluids | • General or severe duty<br>• Standard change interval (2)<br>• Prognostics MY2010 (3) |
| (1) Military specification fluids are approved for use in Military Applications in 3000, 4000, AT, MT, and HT Series products only, and are strictly prohibited from use in 1000 and 2000 Series transmission products.<br>(2) Fluid and filter change intervals are based on transmission model, vocation (duty cycle), and fluid type (see attached charts). NOTE: Fluid drain intervals are based on 100 percent fill with Allison approved fluids. Fluid change intervals may be adjusted based on fluid analysis and fleet data. Refer to Service Information Letter (SIL) 17-TR-96 for details.<br>(3) Prognostics are available with Allison Approved TES 668™, TES 295® and TES 389® fluids only. | |

**Local conditions, severity of operation or duty cycle may require more or less frequent fluid change intervals that differ from the published recommended fluid change intervals of Allison Transmission. Allison Transmission recommends that customers use fluid analysis as the primary method for determining fluid change intervals. In the absence of a fluid analysis program the fluid change intervals listed in the charts must be used.**

**For information concerning models not listed in this publication, please call the Allison Technical Assistance Center at 1-800-252-5283.**

Refer to the latest revision of Allison publication number GN2055EN, “Technicians’ Guide to Automatic Transmission Fluid”, and SIL 17-TR-96 for additional information on oil analysis and general knowledge about transmission fluids.

## Non-approved Fluids

DEXRON®-III and DEXRON®-VI fluids are no longer approved for use in Commercial On-Highway transmission products and have been removed from all Allison Approved TES 389® fluids lists. TES 228® (C4 type) fluids are no longer approved for use in Commercial On-Highway transmission products and have been removed from the Allison Approved TES 389® fluids list.

Copyright © 2021 Allison Transmission, Inc. All Rights Reserved.

## Allison Fluid and Filters for Extended Transmission Coverage (ETC)

Specified fluids and genuine Allison filters must be used to qualify for Extended Transmission Coverage. This coverage is forfeited when non-approved fluids and non-genuine filters are used.

### Transmissions Not OEM Factory Filled with TES 668™ or TES 295® Fluids:

New vehicles delivered from the OEM with a mixture of TES 668™ or TES 295® fluid and Allison Approved TES 389® fluids must follow fluid/filter change recommendations for Allison Approved TES 389® fluids outlined in flow charts. If the customer fills the transmission with a mixture of Allison Approved TES 668™ and TES 295® fluid, the change recommendations of Allison Approved TES 389® fluids must be followed. Upon the second oil change, if the customer reinstalls TES 668™ or TES 295®, the fluid/filter change recommendations outlined in 100 percent TES 668™ or TES 295® approved fluids must be followed. H 40/50 EP™ Products require OEM factory TES 468™ fluids.

### Fluid Exchange Machines:

Fluid exchanging machines are not recommended or recognized due to variation and inconsistencies that may not guarantee removal of 100 percent of the used fluid.

### 3000/4000 Series and H 40/50 EP™ Filters:

New Genuine Allison High Capacity filters were released into production beginning with:

6510670912 (3000) 6610205144 (4000) 7110001551 (H 40/50 EP™) 6520067342 (3000) 6620002521 (4000)

### High-Capacity Filters:

Genuine Allison 3000/4000 Series and H 40/50 EP™ high-capacity filters were released into production beginning July 2006. High-capacity filters allow extended filter change intervals when used with Allison Approved TES 668™, TES 295® or TES 468™ fluid. High-capacity service filters can be identified by P/N 29558294 or P/N 29558295 stamped into the filter end cap. Previous Allison 3000/4000 Series and H 40/50 EP™ filters can be identified by P/N 29538231 or P/N 29538232 stamped into the filter end cap.

**Table 1. Filter Kits**

| Series | High-Capacity Filter Kit |
|---|---|
| 3000/4000 | 29558328 (2 inch) |
| | 29558329 (4 inch) |
| H 40/50 EP™ | 29545785 |

**NOTE:** Extended 3000/4000 Series transmissions Allison Approved TES 668™ or TES 295® fluid and filter change intervals are only allowed with Genuine Allison high-capacity filters. Filters must be changed at or before recommended intervals.

Copyright © 2021 Allison Transmission, Inc. All Rights Reserved.

## Initial Transmission Filter Change Schedule (Production/ReTran®)

*3000 and 4000 SeriesTransmissions — Main Filter 5000 miles (8000 km)/200 hours

*3000 and 4000 Series Transmission ReTran® — Main Filter 5000 miles (8000 km)/200 hours

H 40/50 EP™ Products Spin-On Control Main Filter 5000 miles (8000 km)/200 hours

AT Auxiliary Filter 5000 miles (8000 km)/200 hours

MT Auxiliary Filter 5000 miles (8000 km)/200 hours

*Not required beginning with S/N 6510670912, S/N 6610205144, S/N 6520067342, S/N 6620002521, and S/N 9320005689, S/N 9370006284, S/N 9420006679, S/N 9470005459

## 1000, 2000, 3000, 4000 Series Hours vs. Miles Chart

Table 2 (2000/3000 Hour Based Maintenance) and Table 3 (4000/6000 Hour Based Maintenance) list the equivalent mileage based on the Allison recommended change intervals for Allison Approved TES 668™ or TES 295® approved fluids. For example, vocations or vehicles that operate with a high density shift cycle typically reach the 6000/3000 hour change limit **before** the recommended mileage limit.

An example could be a transit bus equipped with a B500R that operates an average of 7 mph (11 km/h). Recommended fluid/filter change interval for a B500R equipped with 2 inch control module in a transit vocation using a TES 668™ or TES 295® fluid is 150,000 miles/240 000 km/6000 hours or 48 months whichever occurs first. Using Table 3 Hours vs. Miles, a vehicle operating at 7 mph (11 km/h) will travel approximately 42,000 miles (66 000 km) in 6000 hours. If an odometer is used to determine when to change the transmission fluid and filters, this specific vehicle would change the fluid every 42,000 miles (66 000 km) and filters every 21,000 miles (33 000 km).

Estimating average mph can be approximated by dividing total distance traveled in a typical day by the hours elapsed during that total distance. An example would be a vehicle that operates on average 96 miles (155 km) a day over an 8 hour period would average 12 mph (19 km/h).

Copyright © 2021 Allison Transmission, Inc. All Rights Reserved.

**Table 2. 2000 and 3000 Hour Based Maintenance — Hours vs. Miles**

| 2000 Hour Based Maintenance | | | | 3000 Hour Based Maintenance | | | |
|---|---|---|---|---|---|---|---|
| km/h Average | km Equivalent | MPH Average | miles Equivalent | km/h Average | km Equivalent | MPH Average | miles Equivalent |
| 5 | 10000 | 3 | 6000 | 5 | 15000 | 3 | 9000 |
| 6 | 12000 | 4 | 8000 | 6 | 18000 | 4 | 12000 |
| 8 | 16000 | 5 | 1000 | 8 | 24000 | 5 | 15000 |
| 10 | 20000 | 6 | 12000 | 10 | 30000 | 6 | 18000 |
| 11 | 22000 | 7 | 14000 | 11 | 33000 | 7 | 21000 |
| 13 | 26000 | 8 | 16000 | 13 | 39000 | 8 | 24000 |
| 14 | 28000 | 9 | 18000 | 14 | 42000 | 9 | 27000 |
| 16 | 32000 | 10 | 20000 | 16 | 48000 | 10 | 30000 |
| 18 | 36000 | 11 | 22000 | 18 | 54000 | 11 | 33000 |
| 19 | 38000 | 12 | 24000 | 19 | 57000 | 12 | 36000 |
| 21 | 42000 | 13 | 26000 | 21 | 63000 | 13 | 39000 |
| 23 | 46000 | 14 | 28000 | 23 | 69000 | 14 | 42000 |
| 24 | 48000 | 15 | 30000 | 24 | 72000 | 15 | 45000 |
| 26 | 52000 | 16 | 32000 | 26 | 78000 | 16 | 48000 |
| 27 | 54000 | 17 | 34000 | 27 | 81000 | 17 | 51000 |
| 29 | 58000 | 18 | 36000 | 29 | 87000 | 18 | 54000 |
| 31 | 62000 | 19 | 38000 | 31 | 93000 | 19 | 57000 |
| 32 | 64000 | 20 | 40000 | 32 | 96000 | 20 | 60000 |
| 34 | 68000 | 21 | 42000 | 34 | 102000 | 21 | 63000 |
| 35 | 70000 | 22 | 44000 | 35 | 105000 | 22 | 66000 |
| 37 | 74000 | 23 | 46000 | 37 | 111000 | 23 | 69000 |
| 39 | 78000 | 24 | 48000 | 39 | 117000 | 24 | 72000 |
| 40 | 80000 | 25 | 50000 | 40 | 120000 | 25 | 75000 |

Copyright © 2021 Allison Transmission, Inc. All Rights Reserved.

**Table 3. 4000 and 6000 Hour Based Maintenance — Hours vs. Miles**

| 4000 Hour Based Maintenance | | | | 6000 Hour Based Maintenance | | | |
|---|---|---|---|---|---|---|---|
| km/h Average | km Equivalent | MPH Average | miles Equivalent | km/h Average | km Equivalent | MPH Average | miles Equivalent |
| 5 | 20000 | 3 | 12000 | 5 | 30000 | 3 | 18000 |
| 6 | 24000 | 4 | 16000 | 6 | 36000 | 4 | 24000 |
| 8 | 32000 | 5 | 20000 | 8 | 48000 | 5 | 30000 |
| 10 | 40000 | 6 | 24000 | 10 | 60000 | 6 | 36000 |
| 11 | 44000 | 7 | 28000 | 11 | 66000 | 7 | 42000 |
| 13 | 52000 | 8 | 32000 | 13 | 78000 | 8 | 48000 |
| 14 | 56000 | 9 | 36000 | 14 | 84000 | 9 | 54000 |
| 16 | 64000 | 10 | 40000 | 16 | 96000 | 10 | 60000 |
| 18 | 72000 | 11 | 44000 | 18 | 108000 | 11 | 66000 |
| 19 | 76000 | 12 | 48000 | 19 | 114000 | 12 | 72000 |
| 21 | 84000 | 13 | 52000 | 21 | 126000 | 13 | 78000 |
| 23 | 92000 | 14 | 56000 | 23 | 138000 | 14 | 84000 |
| 24 | 96000 | 15 | 60000 | 24 | 144000 | 15 | 90000 |
| 26 | 104000 | 16 | 64000 | 26 | 156000 | 16 | 96000 |
| 27 | 108000 | 17 | 68000 | 27 | 162000 | 17 | 102000 |
| 29 | 116000 | 18 | 72000 | 29 | 174000 | 18 | 108000 |
| 31 | 124000 | 19 | 76000 | 31 | 186000 | 19 | 114000 |
| 32 | 128000 | 20 | 80000 | 32 | 192000 | 20 | 120000 |
| 34 | 136000 | 21 | 84000 | 34 | 204000 | 21 | 126000 |
| 35 | 140000 | 22 | 88000 | 35 | 210000 | 22 | 132000 |
| 37 | 148000 | 23 | 92000 | 37 | 222000 | 23 | 138000 |
| 39 | 156000 | 24 | 96000 | 39 | 234000 | 24 | 144000 |
| 40 | 160000 | 25 | 100000 | 40 | 240000 | 25 | 150000 |

Copyright © 2021 Allison Transmission, Inc. All Rights Reserved.

**Table 4. Filter/Fluid Change Intervals/Fluid Capacities**

| | | | |
|---|---|---|---|
| **1000/ 2000 Series** | Filter | Change Intervals | Refer to Appendix A |
| | | Filter Types and Part Numbers | Refer to Appendix A |
| | Fluid | Change Intervals | Refer to Appendix A |
| | | Fluid Capacity | Refer to Appendix A |
| **3000/ 4000 Series** | Filter | Change Intervals | Refer to Appendix B |
| | | Filter and Gasket Kits | Refer to Appendix B |
| | Fluid | Change Intervals | Refer to Appendix B |
| | | Fluid Capacity | Refer to Appendix B |
| | | Additional Fill for Allison Coolers/Accumulators | Refer to Appendix B |
| **TC10** | Filter | Change Intervals | Refer to Appendix C |
| | | Filter and Gasket Kits | Refer to Appendix C |
| | Fluid | Change Intervals | Refer to Appendix C |
| | | Fluid Capacity | Refer to Appendix C |
| **H 40/ 50 EP™ Products** | Filter | Change Intervals | Refer to Appendix D |
| | | Filter and Gasket Kits | Refer to Appendix D |
| | Fluid | Change Intervals | Refer to Appendix D |
| | | Fluid Capacity | Refer to Appendix D |
| **AT 500 Series** | Filter | Change Intervals | Refer to Appendix E |
| | | Filter and Gasket Kits | Refer to Appendix E |
| | Fluid | Change Intervals | Refer to Appendix E |
| | | Fluid Capacity | Refer to Appendix E |
| **MT 600 Series** | Filter | Change Intervals | Refer to Appendix F |
| | | Filter and Gasket Kits | Refer to Appendix F |
| | Fluid | Change Intervals | Refer to Appendix F |
| | | Fluid Capacity | Refer to Appendix F |
| **HT 700 Series** | Filter | Change Intervals | Refer to Appendix G |
| | | Filter and Gasket Kits | Refer to Appendix G |
| | Fluid | Change Intervals | Refer to Appendix G |
| | | Fluid Capacity | Refer to Appendix G |

Copyright © 2021 Allison Transmission, Inc. All Rights Reserved.

# Appendix A. 1000/2000 Filter Change/Fluid Change Intervals

**Table 5. Recommended Filter Change/Fluid Intervals**

**NOTE:** Refer to Table 6 for Filter Type/Part Number Information and Table 7 for Fluid Capacity Information.

**NOTE:** Change fluid and filters at or before recommended mileage, months, or hours have elapsed, whichever occurs first.

**NOTE:** Local conditions, severity of operation or duty cycle may require more or less frequent fluid change intervals that differ from the published recommended fluid change intervals of Allison Transmission. Allison Transmission recommends that customers use fluid analysis as the primary method for determining fluid change intervals. In the absence of a fluid analysis program the fluid change intervals listed in the charts should be used.

| 1000/2000 Series Fluid And Filter Change Interval Recommendations | | | | | | |
|---|---|---|---|---|---|---|
| | | | Prognostics Turned Off or Not Calibrated in TCM | | Prognostics Turned On | |
| | | Duty Cycle | Allison Approved TES 668™ or TES 295® Fluid | Allison Approved TES 389® Fluid | Allison Approved TES 668™ or TES 295® Fluid | Allison Approved TES 389® Fluid |
| Fluid | | General* | 150,000 Miles (240,000 km) 4,000 Hours 48 Months | 50,000 Miles (80,000 km) 2,000 Hours 24 Months | When indicated by controller or 48 months, whichever occurs first | When indicated by controller or 24 months, whichever occurs first (MY2010) |
| | | Severe** | 75,000 Miles (120,000 km) 4,300 Hours 36 Months | 12,000 Miles (20,000 km) 500 Hours 6 Months | | |
| Filters | Spin-On Control Main Filter | General* | 50,000 Miles (80,000 km) 2,000 Hours 24 Months | 50,000 Miles (80,000 km) 2,000 Hours 24 Months | When indicated by controller or 48 months, whichever occurs first | When indicated by controller or 24 months, whichever occurs first (MY2010) |
| | | Severe** | 50,000 Miles (80,000 km) 2,000 Hours 24 Months | 12,000 Miles (20,000 km) 500 Hours 6 Months | | |
| | Internal Filter | All | Overhaul | Overhaul | Overhaul | Overhaul |

**NOTE:** TES 389® cannot be used in MY09.

**NOTE:** Anything less than 100 percent concentration of TES 668™ or TES 295® Allison approved fluids is considered a mixture and should utilize Schedule One TES 389® change intervals. Also, mixtures shall not be used with Prognostics.

* General Vocation: All vocations not classified as Severe
** Severe Vocation: On/Off Highway, Refuse, City Transit, Shuttle Transit

Copyright © 2021 Allison Transmission, Inc. All Rights Reserved.

**Table 6. Filter Type/Part Number**

| Filters | |
|---|---|
| **Filter Type** | **Part Number** |
| Control Main | 29539579 |
| Pan Suction (Shallow)* | 29542833, 29537965** |
| Pan Suction (Deep)* | 29542824 |

* Overhaul Only
** See SIL 12-1K2K-10, Interchangeability of the Shallow Sump Filters

**Table 7. Fluid Capacity**

**NOTE:** Approximate Fluid Loss for Control Main Filter (Spin-On) = 0.47 liters (1 pint)

| Capacities (Approximate) * | | |
|---|---|---|
| Sump Type | Initial Fill** | Refill** |
| | Liters (Quarts) | Liters (Quarts) |
| Standard | 14 (14.8) | 10 (10.6) |
| Shallow | 12 (12.7) | 7 (7.4) |

* Fluid fill capacity is dependent on vehicle configuration. Final fluid capacity must be determined by dipstick level (see Mechanic's Tips MT3190EN, MT4007EN Section 1 or your Operator's Manual under "Care and Maintenance".
** Approximate quantities, do not include external lines, cooler, and hoses.

Copyright © 2021 Allison Transmission, Inc. All Rights Reserved.

# Appendix B. 3000/4000 Filter Change/Fluid Change Intervals

**Table 8. Recommended Filter Change/Fluid Change Intervals**

**NOTE:** Refer to Table 9 for Filter and Gasket Kit Information, Table 10 for Fluid Capacity Information, Table 11 for Additional Fill for Allison Coolers/Accumulators, and Figure 1 for Drain Plug Location, Filter Locations, and Control Module Dimensions.

**NOTE:** Change fluid and filters at or before recommended mileage, months, or hours have elapsed, whichever occurs first.

**NOTE:** Local conditions, severity of operation or duty cycle may require more or less frequent fluid change intervals that differ from the published recommended fluid change intervals of Allison Transmission. Allison Transmission recommends that customers use fluid analysis as the primary method for determining fluid change intervals. In the absence of a fluid analysis program the fluid change intervals listed in the charts should be used.

| 3000/4000 Series Fluid And Filter Change Interval Recommendations | | | | | |
|---|---|---|---|---|---|
| | | Prognostics Turned Off or Not Calibrated in TCM | | Prognostics Turned On | |
| | Duty Cycle | Allison Approved TES 668™ or TES 295® Fluid | Allison Approved TES 389® Fluid | Allison Approved TES 668™ or TES 295® Fluid | Allison Approved TES 389® Fluid |
| Fluid | General* | 300,000 Miles (480,000 km) 6,000 Hours 48 Months | 25,000 Miles (40,000 km) 1,000 Hours 12 Months | When indicated by controller or 60 months, whichever occurs first | When indicated by controller or 24 months, whichever occurs first |
| | Severe** | 150,000 Miles (240,000 km) 6,000 Hours 48 Months | 12,000 Miles (20,000 km) 500 Hours 6 Months | | |
| * General Vocation: All vocations not classified as Severe<br>** Severe Vocation: On/Off Highway, Refuse, City Transit, Shuttle Transit | | | | | |

Copyright © 2021 Allison Transmission, Inc. All Rights Reserved.

**Table 8. Recommended Filter Change/Fluid Change Intervals *(cont'd)***

| 3000/4000 Series Fluid And Filter Change Interval Recommendations | | | | | | |
|---|---|---|---|---|---|---|
| | | | Prognostics Turned Off or Not Calibrated in TCM | | Prognostics Turned On | |
| | | Duty Cycle | Allison Approved TES 668™ or TES 295® Fluid | Allison Approved TES 389® Fluid | Allison Approved TES 668™ or TES 295® Fluid | Allison Approved TES 389® Fluid |
| Filters | Main Filter | General* | 75,000 Miles (120,000 km) 3,000 Hours 36 Months | 25,000 Miles (40,000 km) 1,000 Hours 12 Months | When indicated by controller or 60 months, whichever occurs first | When indicated by controller or 24 months, whichever occurs first |
| | | Severe** | 75,000 Miles (120,000 km) 3,000 Hours 36 Months | 12,000 Miles (20,000 km) 500 Hours 6 Months | | |
| | Internal Filter | All | Overhaul | Overhaul | Overhaul | Overhaul |
| | Lube/ Auxiliary Filter | General* | 75,000 Miles (120,000 km) 3,000 Hours 36 Months | 25,000 Miles (40,000 km) 1,000 Hours 12 Months | When indicated by controller or 60 months, whichever occurs first | When indicated by controller or 24months, whichever occurs first |
| | | Severe** | 75,000 Miles (120,000 km) 3,000 Hours 36 Months | 12,000 Miles (20,000 km) 500 Hours 6 Months | | |

**NOTE:** TES 389® cannot be used in MY09.

**NOTE:** Anything less than 100 percent concentration of TES 668™ or TES 295® Allison approved fluids is considered a mixture and should utilize Schedule One TES 389® change intervals. Also, mixtures shall not be used with Prognostics.

* General Vocation: All vocations not classified as Severe
** Severe Vocation: On/Off Highway, Refuse, City Transit, Shuttle Transit

**Table 9. Filter and Gasket Kits**

**NOTE:** Refer to Figure 1 for Filter Locations, and Control Module Dimensions.

| Filter and Gasket Kits | |
|---|---|
| **Kit Description** | **Filter (High-Capacity)** |
| Filter Kit, 4” Service Filters for 2” or 7” sump | 29558328 |
| Filter Kit, 6” Service Filters for 4” sump | 29558329 |

Copyright © 2021 Allison Transmission, Inc. All Rights Reserved.

**NOTE:** Square cut filter cover O-rings P/N 29501469 are no longer included in High-Capacity Filter Kits P/N 29558328 and P/N 29558329. When servicing former filter covers P/N 29507434, the required square cut filter cover O-rings must be ordered separately. Square cut filter cover O-rings were originally used in transmissions manufactured prior to January 22, 1996, prior to 3000 Series Product Family. S/N 6510069120 or 4000 Series Product Family S/N 6610009730. Former filter covers can be identified by the part number cast on the exterior side of the filter cover. Any 3000 and 4000 Series Product Family transmissions with the former filter cover requires one square cut filter cover O-ring (4) and one O-ring (5) (refer to Figure 1) per filter cover. O-ring (5) is included in the aforementioned high-capacity filter kits. Some remanufactured transmissions may require the use of square cut O-rings if equipped with the former filter covers.

**Table 10. Fluid Capacity**

| Fluid Capacities (Approximate)* | | | |
|---|---|---|---|
| Transmissions Fluid Loss — Filter Change Only:<br>Main Filter = 1.9 liters (2 quarts)<br>Lube Filter = 7.6 liters (8 quarts) | | | |
| Model | Sump | Initial Fill** | Refill** |
| | | Liters (Quarts) | Liters (Quarts) |
| 3000 | 4 inch | 27 (29) | 18 (19) |
| 3000 | 2 inch | 25 (26) | 16 (17) |
| 4000 | 4 inch*** | 45 (48) | 37 (39) |
| 4000 | 2 inch*** | 38 (40) | 30 (31) |

* Fluid fill capacity is dependent on vehicle configuration. Final fluid capacity must be determined by dipstick level (see Mechanic's Tips MT3004EN Section 1 or your Operator's Manual under "Care and Maintenance".
** Approximate quantities, do not include external lines, cooler, and hose
*** Add 2.8 Liters (3 Quarts) for Transmissions with PTO

**Table 11. Additional Fill for Allison Coolers/Accumulators**

| Additional Fill for Allison Coolers/Accumulators | | |
|---|---|---|
| **Product Family** | **Cooler Type** | **Liters (Quarts)** |
| 3000/4000 | Non-Retarder Direct Mount | 1.0 (1.1) |
| 3000/4000 | Remote/Retarder/Sump | 2.5 (2.6) |
| 3000 | Retarder Accumulator | 1.2 (1.3) |
| 4000 | Direct Mount/Retarder | 2.1 (2.2) |
| 4000 | Retarder Accumulator | 0.6 (0.6) |

Copyright © 2021 Allison Transmission, Inc. All Rights Reserved.

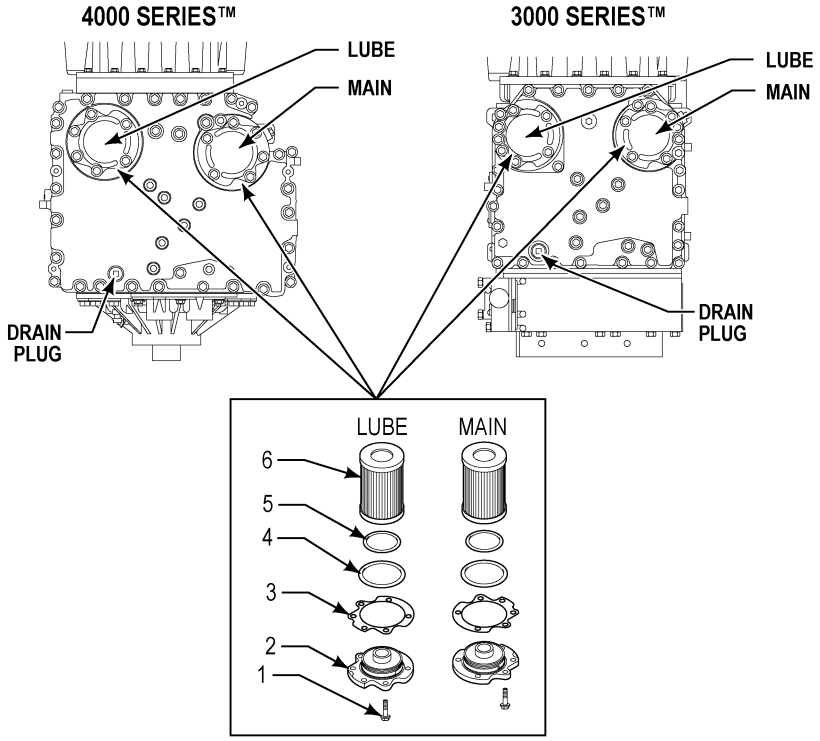


**NOTE:** Torque all filter cover retaining bolts to 51-61 N•m (38-45 lb ft)
**NOTE:** Main and Lube Filter designations cast into bottom of Control Module
**NOTE:** O-Ring #4 is no longer included in high capacity filter kits.

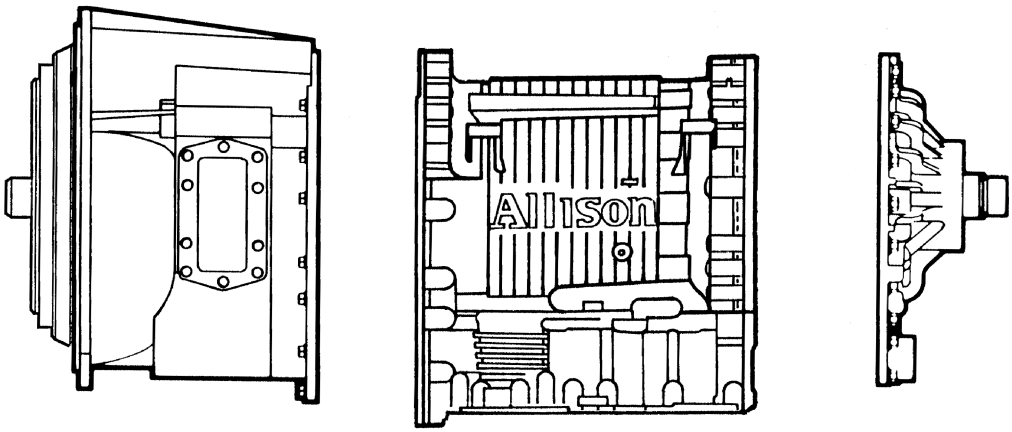


* 4 inch Control Module Measures 3.5 inch approximately
2 inch Control Module Measures 1.75 inch approximately

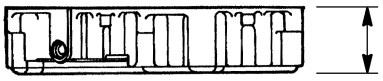

REFERENCED* DIMENSION

5308987

**Figure 1. Drain Plug/Filter Location and Control Module Dimensions**

Copyright © 2021 Allison Transmission, Inc. All Rights Reserved.

# Appendix C. TC10 Filter Change/Fluid Change Intervals

### Table 12. Recommended Filter Change/Fluid Change Intervals

**NOTE:** Refer to Table 13 for Filter and Gasket Kit Information, Table 14 for Fluid Capacity Information, and Figure 2 for Drain Plug and Filter Locations.

**NOTE:** Change fluid and filters at or before recommended mileage, months, or hours have elapsed, whichever occurs first.

**NOTE:** Local conditions, severity of operation or duty cycle may require more or less frequent fluid change intervals that differ from the published recommended fluid change intervals of Allison Transmission. Allison Transmission recommends that customers use fluid analysis as the primary method for determining fluid change intervals. In the absence of a fluid analysis program the fluid change intervals listed in the charts should be used.

| TC10®Tractor Series Fluid And Filter Change Interval Recommendations | | | | |
|---|---|---|---|---|
| | | | **Prognostics Turned Off or Not Calibrated in TCM** | **Prognostics Turned On** |
| | | **Duty Cycle** | **Allison Approved TES 295®* Fluid** | **Allison Approved TES 295®* Fluid** |
| **Fluid** | | General | 500,000 Miles (804,700 km)<br>20,000 Hours<br>60 Months | When indicated by controller or<br>60 months,<br>whichever occurs first |
| **FIters** | **Internal Filter** | General | Overhaul | Overhaul |
| | **Lube/ Auxiliary Filter** | General | 500,000 Miles (804,700 km)<br>20,000 Hours<br>60 Months | When indicated by controller or<br>60 months,<br>whichever occurs first |
| *100 Percent Concentration Allison Approved TES 295® Fluid and Allison Filters — Required | | | | |

### Table 13. Filter and Gasket Kits

**NOTE:** Refer to Figure 2 for Filter Location.

| Filter and Gasket Kits | |
|---|---|
| **Description** | **Part Number** |
| Kit - Oil Filter | 29554653 |
| Oil Filter* | 29558295 |
| O-Ring, Cover * | 29554650 |
| Seal, Drain Plug * | 24205123 |
| Instruction Sheet # 350 * | 29554750 |
| Internal Suction Filter** | 29551998 |
| *Included in the Oil Filter Kit<br>**Overhaul Only | |

Copyright © 2021 Allison Transmission, Inc. All Rights Reserved.

**Table 14. Fluid Capacity**

| Capacities (Approximate) * | | |
|---|---|---|
| Model | Initial Fill ** | Refill ** |
| | Liters (Quarts) | Liters (Quarts) |
| TC10 | 49 (52) | 38 (40) |

* Fluid fill capacity is dependent on vehicle configuration. Final fluid capacity must be determined by dipstick level (refer to Mechanic's Tips MT7119EN Section 2 or your Operator's Manual OM7118EN under "Care and Maintenance").
** Approximate quantities, do not include external circuits.

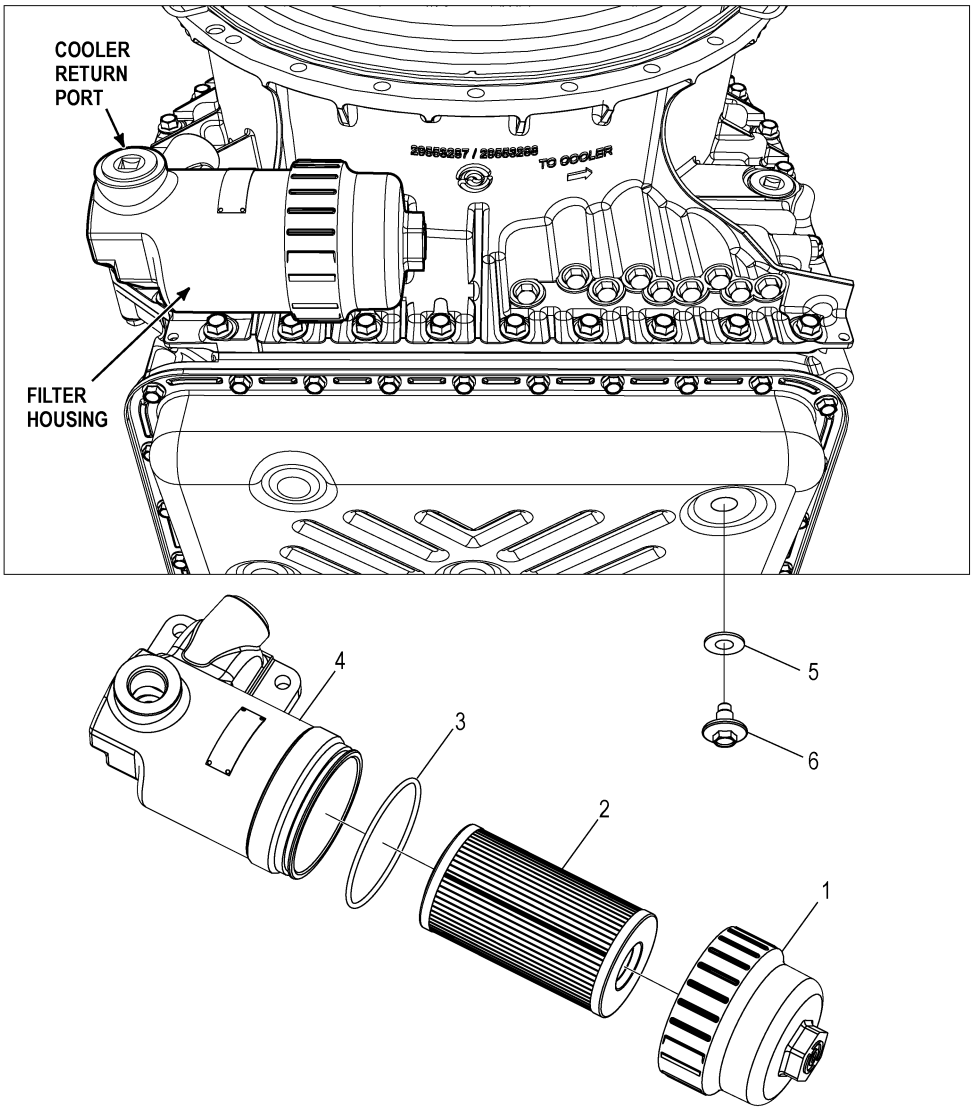


**Figure 2. Drain Plug and Filter Locations**

Copyright © 2021 Allison Transmission, Inc. All Rights Reserved.

# Appendix D. H 40/50 EP Filter Change/Fluid Change Intervals

### Table 15. Recommended Filter Change/Fluid Change Intervals

**NOTE:** Refer to Figure 3 for Drain Plug and Filter Locations.

**NOTE:** Change filters/fluid at or before recommended mileage or months have elapsed, whichever occurs first.

**NOTE:** H 40/50 EP™ Drive Unit Drive Unit Lube Filter extended time change intervals are only valid with the use of Allison Transmission High-Capacity filters. High-Capacity filters implemented into production starting with S/N 7110001551.

**NOTE:** Local conditions, severity of operation or duty cycle may require more or less frequent fluid change intervals that differ from the published recommended fluid change intervals of Allison Transmission. Allison Transmission recommends that customers use fluid analysis as the primary method for determining fluid change intervals. In the absence of a fluid analysis program the fluid change intervals listed in the charts should be used.

| H 40/50 EP Fluid And Filter Change Interval Recommendations | | | |
|---|---|---|---|
| | | **Duty Cycle** | **Allison Approved TES 468™* Fluid** |
| **Fluid** | | General | 100,000 Miles (160,000 km) or 48 Months |
| **FIters** | **Control Main Filter** | Intial | 5,000 Miles (8,000 km) or 200 Hours |
| | | After Intial | 50,000 Miles (80,000 km) or 24 Months |
| | **Lube Filter** | High Capacity | 100,000 Miles (160,000 km) or 48 Months |
| | **Sump/Internal Filter** | General | Overhaul |
| *100 Percent Concentration Allison Approved TES 468™ Fluid and Allison Filters — Required | | | |

### Table 16. Filter and Gasket Kits

**NOTE:** Refer to Figure 3 for Drain Plug and Filter Locations.

| Filter and Gasket Kits | |
|---|---|
| **Description** | **Part Number** |
| Lube Filter and Gasket Kit | 29545785 |
| Control Main Filter | 29539579 |

Copyright © 2021 Allison Transmission, Inc. All Rights Reserved.

**Table 17. Fluid Capacity**

**NOTE:** Refer to Figure 3 for Drain Plug and Filter Locations.

| Capacities (Approximate) * | |
|---|---|
| Transmissions Fluid Loss — Filter Change Only:<br>Control Main filter = 0.94 liters (1 quart)<br>Lube Filter = 2.84 liters (3 quarts) | |
| Model | Refill** |
| | Liters (Quarts) |
| H 40/50 EP™ Drive Unit Drive Unit | 15.1 (16) |
| * Fluid fill capacity is dependent on vehicle configuration.<br>** Approximate quantities, do not include DPIM, cooler, and external lines. | |

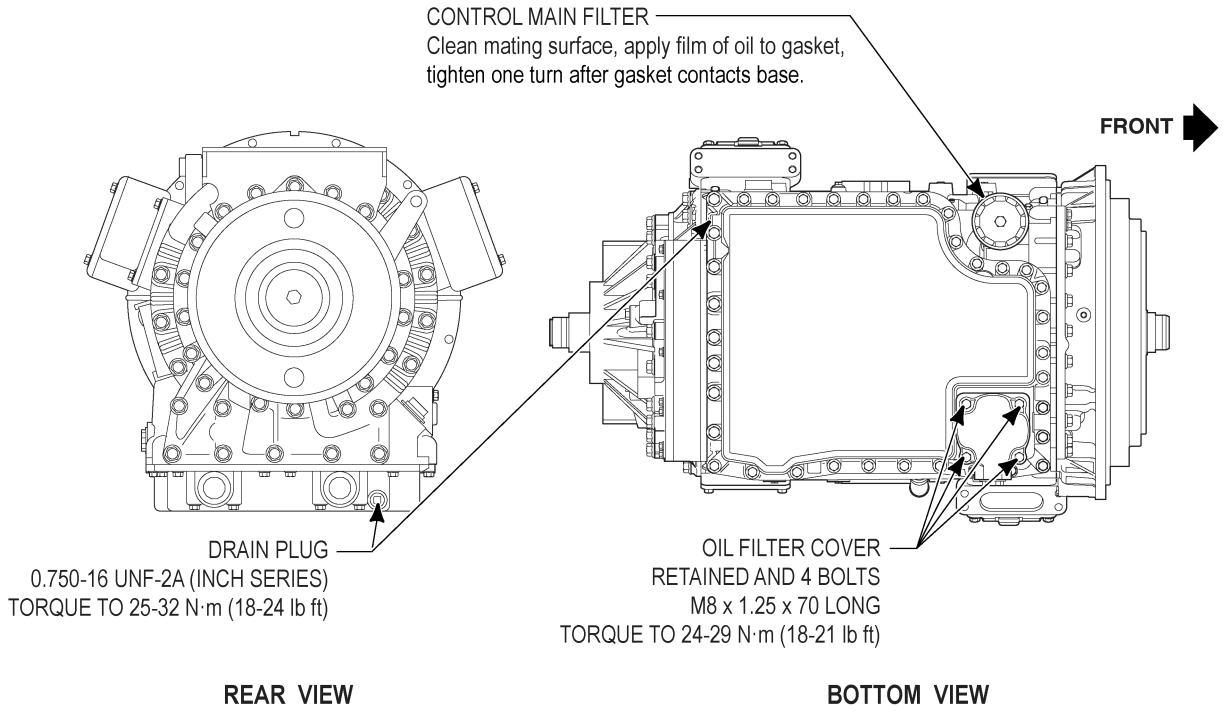


**Figure 3. Drain Plug and Filter Locations**

Copyright © 2021 Allison Transmission, Inc. All Rights Reserved.

# Appendix E. AT 500 Series Filter Change/Fluid Change Intervals

**Table 18. Recommended Filter Change Intervals**

**NOTE:** Refer to Table 19 for Fluid Change Intervals, Table 20 for Filter and Gasket Kit Information and Table 21 for Fluid Capacity Information.

**NOTE:** Change filters at or before recommended mileage, months, or hours have elapsed, whichever occurs first.

<table>
<tr><th colspan="8">Filter Change Intervals</th></tr>
<tr><th colspan="4">100 Percent Concentration Allison Approved TES 295® Fluids*</th><th colspan="4">Allison Approved TES 389® Fluids*</th></tr>
<tr><th colspan="2">Internal Filter</th><th colspan="2">Lube/Auxiliary Filter</th><th colspan="2">Internal Filter</th><th colspan="2">Lube/Auxiliary Filter</th></tr>
<tr><td>General***</td><td>Severe****</td><td colspan="2">Initial<br>5000 Miles (8000 km)<br>200 Hours</td><td>General***</td><td>Severe****</td><td colspan="2">Initial<br>5000 Miles (8000 km)<br>200 Hours</td></tr>
<tr><td colspan="2">Polyester Filter**</td><td>General***†</td><td>Severe****†</td><td colspan="2">Polyester Filter**</td><td>General***†</td><td>Severe****†</td></tr>
<tr><td>Overhaul</td><td>Overhaul</td><td rowspan="3">50,000 Miles<br>(80 000 km)<br>2000 Hours<br>24 Months</td><td rowspan="3">25,000 Miles<br>(40 000 km)<br>1000 Hours<br>12 Months</td><td>Overhaul</td><td>Overhaul</td><td rowspan="3">25,000 Miles<br>(40 000 km)<br>1000 Hours<br>12 Months</td><td rowspan="3">12,000 Miles<br>(20 000 km)<br>500 Hours<br>6 Months</td></tr>
<tr><td colspan="2">Wire Mesh Filter</td><td colspan="2">Wire Mesh Filter</td></tr>
<tr><td>100,000 Miles<br>(160 000 km)<br>4000 Hours<br>48 Months</td><td>50,000 Miles<br>(80 000 km)<br>2000 Hours<br>24 Months</td><td>25,000 Miles<br>(40 000 km)<br>1000 Hours<br>12 Months</td><td>12,000 Miles<br>(20 000 km)<br>500 Hours<br>6 Months</td></tr>
<tr><td colspan="8">See www.allisontransmission.com for a list of Allison Approved TES 389® fluids.</td></tr>
</table>

* Anything other than 100 percent concentration of Allison Approved TES 295® fluid is considered a mixture and should utilize Allison Approved TES 389® fluids change intervals.
*** General Vocation: less than one (1) stop per mile.
**** Severe Vocation: more than one (1) stop per mile.
** For additional information regarding the polyester internal filter see the latest revision of SIL 9-TR-01.
† When an Allison recommended high-efficiency filter is used, the change interval is not until the Change Filter light indicates the filter is contaminated or until it has been in use for 3 years, whichever occurs first. No mileage restrictions apply. High-efficiency filters are only approved for use with AT/MT/HT Series.

Copyright © 2021 Allison Transmission, Inc. All Rights Reserved.

### Table 19. Recommended Fluid Change Intervals

**NOTE:** Refer to Table 18 for Filter Change Intervals, Table 20 for Filter and Gasket Kit Information and Table 21 for Fluid Capacity Information.

**NOTE:** Change fluid at or before recommended mileage, months, or hours have elapsed, whichever occurs first.

**NOTE:** Local conditions, severity of operation or duty cycle may require more or less frequent fluid change intervals that differ from the published recommended fluid change intervals of Allison Transmission. Allison Transmission recommends that customers use fluid analysis as the primary method for determining fluid change intervals. In the absence of a fluid analysis program the fluid change intervals listed in the charts should be used.

| Fluid Change Intervals | | | |
|---|---|---|---|
| **100 Percent Concentration Allison Approved TES 295® Fluids*** | | **Allison Approved TES 389® Fluids*** | |
| **General**** | **Severe***** | **General**** | **Severe***** |
| 100,000 Miles<br>(160 000 km)<br>4000 Hours<br>48 Months | 50,000 Miles<br>(80 000 km)<br>2000 Hours<br>24 Months | 25,000 Miles<br>(40 000 km)<br>1000 Hours<br>12 Months | 12,000 Miles<br>(20 000 km)<br>500 Hours<br>6 Months |
| See *www.allisontransmission.com* for a list of Allison Approved TES 389® fluids. | | | |

* Anything other than 100 percent concentration of Allison Approved TES 295® fluid is considered a mixture and should utilize Allison Approved TES 389® fluids change intervals.
** General Vocation: less than one (1) stop per mile.
*** Severe Vocation: more than one (1) stop per mile.

### Table 20. Filter and Gasket Kits

**NOTE:** See the latest revision of SIL 9-TR-01 for additional information.

| Filter and Gasket Kits | |
|---|---|
| **Pan** | **Oil Filter and Gasket Kit Part Number** |
| 97 mm (3.8 inch) oil pan | 29540976 |
| 135 mm (5.3 inch) oil pan | 29538489 |

### Table 21. Fluid Capacity

| Capacities (Approximate)* | |
|---|---|
| Pan Depth | Initial Fill** |
| | Liters (Quarts) |
| 97 mm (3.8 inch) oil pan | 8.5 (9) |
| 135 mm (5.3 inch) oil pan | 15 (16) |

* Fluid fill capacity is dependent on vehicle configuration. Final fluid capacity must be determined by dipstick level (see Mechanic's Tips MT1321EN Section 1 or your Operator's Manual under "Care and Maintenance"
** Approximate quantities, do not include external lines and cooler hose

Copyright © 2021 Allison Transmission, Inc. All Rights Reserved.

# Appendix F. MT 600 Series Filter Change/Fluid Change Intervals

**Table 22. Recommended Filter Change Intervals**

**NOTE:** Refer to Table 23 for Fluid Change Intervals, Table 24 for Filter and Gasket Kit Information, and Table 25 for Fluid Capacity Information.

**NOTE:** Change filters at or before recommended mileage, months, or hours have elapsed, whichever occurs first.

**NOTE:** Local conditions, severity of operation or duty cycle may require more or less frequent fluid change intervals that differ from the published recommended fluid change intervals of Allison Transmission. Allison Transmission recommends that customers use fluid analysis as the primary method for determining fluid change intervals. In the absence of a fluid analysis program the fluid change intervals listed in the charts should be used.

| **Filter Change Intervals** | | | | | | | |
|---|---|---|---|---|---|---|---|
| **100 Percent Concentration Allison Approved TES 295® Fluids *** | | | | **Allison Approved TES 389® Fluids *** | | | |
| **Internal Filter** | | **Lube/Auxiliary Filter** | | **Internal Filter** | | **Lube/Auxiliary Filter** | |
| **General**** | **Severe***** | **Initial** 5000 Miles (8000 km) 200 Hours | | **General**** | **Severe***** | **Initial** 5000 Miles (8000 km) 200 Hours | |
| Overhaul | Overhaul | **General**†** | **Severe***†** | Overhaul | Overhaul | **General**†** | **Severe***†** |
| | | 50,000 Miles (80 000 km) 2000 Hours 24 Months | 25,000 Miles (40 000 km) 1000 Hours 12 Months | | | 25,000 Miles (40 000 km) 1000 Hours 12 Months | 12,000 Miles (20 000 km) 500 Hours 6 Months |
| See *www.allisontransmission.com* for a list of Allison Approved TES 389® fluids. | | | | | | | |

* Anything other than 100 percent concentration Allison Approved TES 295® fluid is considered a mixture and should utilize Allison Approved TES 389® fluids change intervals.
** General Vocation: less than one (1) stop per mile.
*** Severe Vocation: more than one (1) stop per mile.
† When an Allison recommended high-efficiency filter is used, the change interval is not until the Change Filter light indicates the filter is contaminated or until it has been in use for 3 years, whichever occurs first. No mileage restrictions apply. High-efficiency filters are only approved for use with AT/MT/HT Series.

Copyright © 2021 Allison Transmission, Inc. All Rights Reserved.

### Table 23. Recommended Fluid Change Intervals

**NOTE:** Refer to Table 22 for Filter Change Intervals, Table 24 for Filter and Gasket Kit Information, and Table 25 for Fluid Capacity Information.

**NOTE:** Change fluid at or before recommended mileage, months, or hours have elapsed, whichever occurs first.

**NOTE:** Local conditions, severity of operation or duty cycle may require more or less frequent fluid change intervals that differ from the published recommended fluid change intervals of Allison Transmission. Allison Transmission recommends that customers use fluid analysis as the primary method for determining fluid change intervals. In the absence of a fluid analysis program the fluid change intervals listed in the charts should be used.

| Fluid Change Intervals | | | |
|---|---|---|---|
| **100 Percent Concentration Allison Approved TES 295® Fluids *** | | **Allison Approved TES 389® Fluids *** | |
| **General**** | **Severe***** | **General**** | **Severe***** |
| 100,000 Miles<br>(160 000 km)<br>4000 Hours<br>48 Months | 50,000 Miles<br>(80 000 km)<br>2000 Hours<br>24 Months | 25,000 Miles<br>(40 000 km)<br>1000 Hours<br>12 Months | 12,000 Miles<br>(20 000 km)<br>500 Hours<br>6 Months |
| See *www.allisontransmission.com* for a list of Allison Approved TES 389® fluids. | | | |

*Anything other than 100 percent concentration Allison Approved TES 295® fluid is considered a mixture and should utilize Allison Approved TES 389® fluids change intervals.
** General Vocation: less than one (1) stop per mile.
***Severe Vocation: more than one (1) stop per mile.

### Table 24. Filter and Gasket Kit

**NOTE:** See the latest revision of SIL 4-TR-01 for additional information.

| Filter and Gasket Kit |
|---|
| **Oil Filter and Gasket Kit Part Number** |
| 29538489 |

### Table 25. Fluid Capacity

| Capacities (Approximate) * | |
|---|---|
| Pan Depth | Initial Fill** |
| | Liters (Quarts) |
| 110 mm (4.3 inch) oil pan | 11 (12) |
| 130 mm (5.1 inch) oil pan | 14 (15) |

* Fluid fill capacity is dependent on vehicle configuration. Final fluid capacity must be determined by dipstick level (see Mechanic's Tips MT1357EN Section 1 or your Operator's Manual under "Care and Maintenance"
** Approximate quantities, do not include external lines and cooler hose

Copyright © 2021 Allison Transmission, Inc. All Rights Reserved.

# Appendix G. HT 700 Series Filter Change/Fluid Change Intervals

**Table 26. Recommended Filter Change Intervals**

**NOTE:** Refer to Table 27 for Fluid Change Intervals, Table 28 for Filter and Gasket Kit Information, and Table 29 for Fluid Capacity Information.

**NOTE:** Change filters at or before recommended mileage, months, or hours have elapsed, whichever occurs first.

| Filter Change Intervals | | | | | | | | | |
|---|---|---|---|---|---|---|---|---|---|
| **100 Percent Concentration Allison Approved TES 295® Fluids*** | | | | | **Allison Approved TES 389® Fluids*** | | | | |
| **Main Filter** | | **Internal Filter** | **Lube/Auxiliary Filter** | | **Main Filter** | | **Internal Filter** | **Lube/Auxiliary Filter** | |
| **General**** | **Severe***** | Overhaul | **Initial** 5000 Miles (8000 km) 200 Hours | | **General**** | **Severe***** | Overhaul | **Initial** 5000 Miles (8000 km) 200 Hours | |
| | | | **General**†** | **Severe***†** | | | | **General**†** | **Severe***†** |
| 50,000 Miles (80 000 km) 2000 Hours 24 Months | 25,000 Miles (40 000 km) 1000 Hours 12 Months | | 50,000 Miles (80 000 km) 2000 Hours 24 Months | 25,000 Miles (40 000 km) 1000 Hours 12 Months | 25,000 Miles (40 000 km) 1000 Hours 12 Months | 12,000 Miles (20 000 km) 500 Hours 6 Months | | 25,000 Miles (40 000 km) 1000 Hours 12 Months | 12,000 Miles (20 000 km) 500 Hours 6 Months |
| See *www.allisontransmission.com* for a list of Allison Approved TES 389® fluids | | | | | | | | | |

* Anything other than 100 percent concentration of Allison Approved TES 295® fluid is considered a mixture and should utilize Allison Approved TES 389® fluids change intervals.
** General Vocation: less than one (1) stop per mile.
*** Severe Vocation: more than one (1) stop per mile.
† When an Allison recommended high-efficiency filter is used, the change interval is not until the Change Filter light indicates the filter is contaminated or until it has been in use for 3 years, whichever occurs first. No mileage restrictions apply. High-efficiency filters are only approved for use with AT/MT/HT Series.

Copyright © 2021 Allison Transmission, Inc. All Rights Reserved.

### Table 27. Recommended Fluid Change Intervals

**NOTE:** Refer to Table 26 for Filter Change Intervals, Table 28 for Filter and Gasket Kit Information, and Table 29 for Fluid Capacity Information.

**NOTE:** Change fluid at or before recommended mileage, months, or hours have elapsed, whichever occurs first.

**NOTE:** Local conditions, severity of operation or duty cycle may require more or less frequent fluid change intervals that differ from the published recommended fluid change intervals of Allison Transmission. Allison Transmission recommends that customers use fluid analysis as the primary method for determining fluid change intervals. In the absence of a fluid analysis program the fluid change intervals listed in the charts should be used.

| Fluid Change Intervals | | | |
|---|---|---|---|
| **100 Percent Concentration Allison Approved TES 295® Fluids *** | | **Allison Approved TES 389® Fluids*** | |
| **General**** | **Severe***** | **General**** | **Severe***** |
| 100,000 Miles<br>(160 000 km)<br>4000 Hours<br>48 Months | 50,000 Miles<br>(80 000 km)<br>2000 Hours<br>24 Months | 25,000 Miles<br>(40 000 km)<br>1000 Hours<br>12 Months | 12,000 Miles<br>(20 000 km)<br>500 Hours<br>6 Months |
| See *www.allisontransmission.com* for a list of Allison Approved TES 389® fluids | | | |
| *Anything other than 100 percent concentration of Allison Approved TES 295® fluid is considered a mixture and should utilize Allison Approved TES 389® fluids change intervals.<br>**General Vocation: less than one (1) stop per mile.<br>***Severe Vocation: more than one (1) stop per mile. | | | |

### Table 28. Filter and Gasket Kit

| Filter and Gasket Kits | |
|---|---|
| **Pan** | **Filter and Gasket Kit Part Number** |
| 114 mm (4.5 inch) Oil Pan | 29530562 |
| 114 mm (4.5 inch) Oil Pan (With adapter 23016883 and pan 23016884) | 29530563 |
| 152 mm (6 inch) Oil Pan | 6839945 |
| 178 mm (7 inch) Oil Pan | 29530564 |
| 216 mm (8.5 inch) Hydraulic Oil Pan | 23012407 |
| 216 mm (8.5 inch) Electronic Oil Pan | 29530565 |

Copyright © 2021 Allison Transmission, Inc. All Rights Reserved.

**Table 29. Fluid Capacities**

| Capacities (Approximate)* | |
|---|---|
| Pan Depth | Refill** |
| | Liters (Quarts) |
| 114 mm (4.5 inch) oil pan | 32 (34) |
| 152 mm (6 inch) oil pan | 28.5 (30) |
| 178 mm (7 inch) oil pan | 31 (33) |
| 216 mm (8.5 inch) oil pan | 40.5 (42.8) |

* Fluid fill capacity is dependent on vehicle configuration. Final fluid capacity must be determined by dipstick level (see Mechanic's Tips MT1366EN (Hydraulic Controls) or MT1958EN (Electronics Controls) Section 1 or your Operator's Manual under "Care and Maintenance"
** Approximate quantities, do not include external lines, and cooler hose

Copyright © 2021 Allison Transmission, Inc. All Rights Reserved.