Service Data

SD-08-12046

Bendix® AD-HF® (High Flow) and AD-HF®i (High Flow Intelligent) PuraGuard® Oil Coalescing Air Dryer

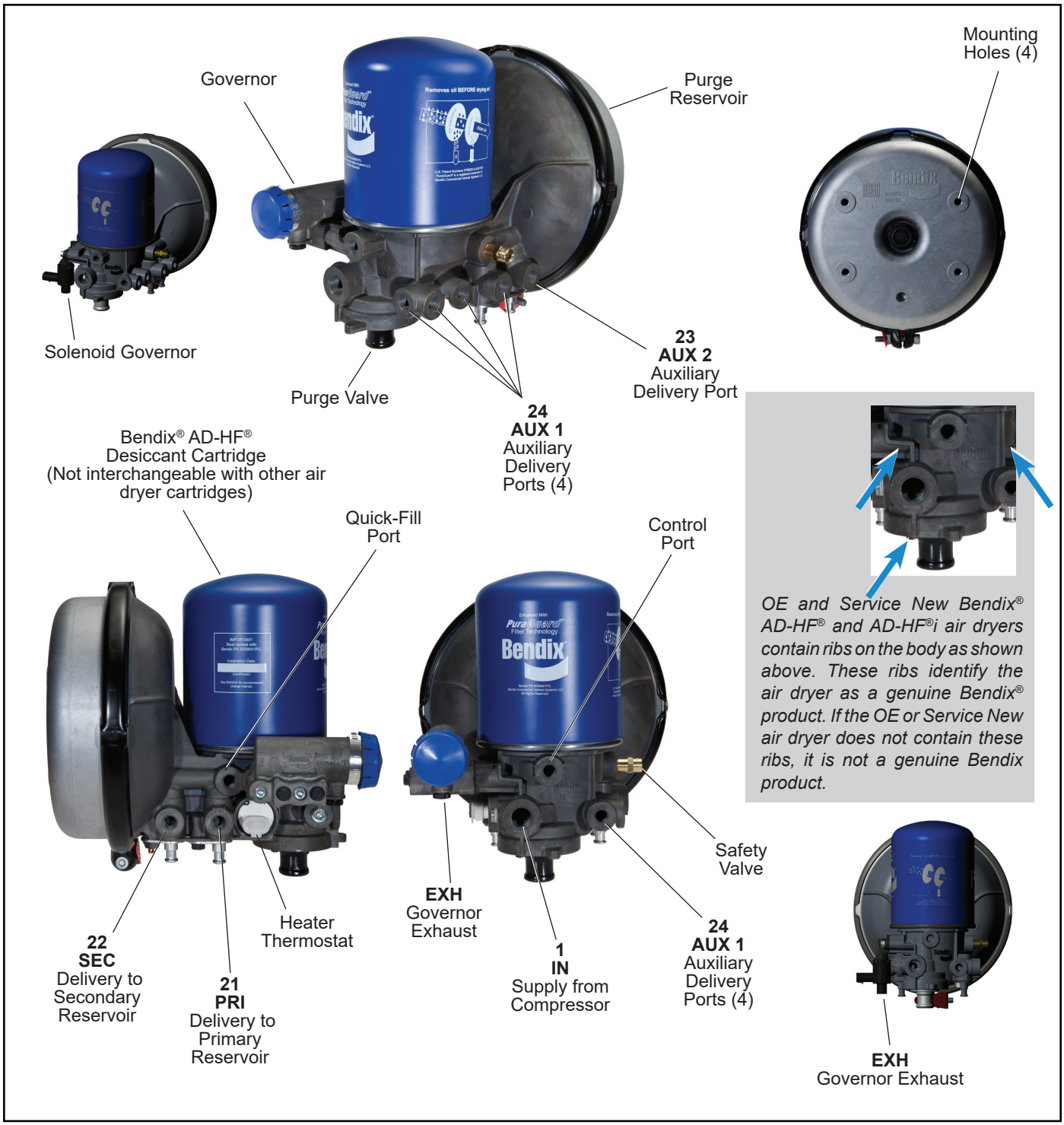

Figure 1 – Bendix® AD-HF® (High Flow) and AD-HF®i (High Flow Intelligent) PuraGuard® Oil Coalescing Air Dryer

GENERAL SAFETY GUIDELINES

WARNING! PLEASE READ AND FOLLOW THESE INSTRUCTIONS TO AVOID PERSONAL INJURY OR DEATH:

When working on or around a vehicle, the following guidelines should be observed AT ALL TIMES:

- ▲ Park the vehicle on a level surface, apply the parking brakes and always block the wheels. Always wear personal protection equipment.
- ▲ Stop the engine and remove the ignition key when working under or around the vehicle. When working in the engine compartment, the engine should be shut off and the ignition key should be removed. Where circumstances require that the engine be in operation, EXTREME CAUTION should be used to prevent personal injury resulting from contact with moving, rotating, leaking, heated or electrically-charged components.
- ▲ Do not attempt to install, remove, disassemble or assemble a component until you have read, and thoroughly understand, the recommended procedures. Use only the proper tools and observe all precautions pertaining to use of those tools.
- ▲ If the work is being performed on the vehicle's air brake system, or any auxiliary pressurized air systems, make certain to drain the air pressure from all reservoirs before beginning ANY work on the vehicle. If the vehicle is equipped with a Bendix® AD-IS® air dryer system, a Bendix® DRM™ dryer reservoir module, a Bendix® AD-9si, AD-HF®, or AD-HF®i air dryer, be sure to drain the purge reservoir.
- ▲ Following the vehicle manufacturer's recommended procedures, deactivate the electrical system in a manner that safely removes all electrical power from the vehicle.
- ▲ Never exceed manufacturer's recommended pressures.
- ▲ Never connect or disconnect a hose or line containing pressure; it may whip and/or cause hazardous airborne dust and dirt particles. Wear eye protection. Slowly open connections with care, and verify that no pressure is present. Never remove a component or plug unless you are certain all system pressure has been depleted.
- ▲ Use only genuine Bendix® brand replacement parts, components and kits. Replacement hardware, tubing, hose, fittings, wiring, etc. must be of equivalent size, type and strength as original equipment and be designed specifically for such applications and systems.
- ▲ Components with stripped threads or damaged parts should be replaced rather than repaired. Do not attempt repairs requiring machining or welding unless specifically stated and approved by the vehicle and component manufacturer.
- ▲ Prior to returning the vehicle to service, make certain all components and systems are restored to their proper operating condition.
- ▲ For vehicles with Automatic Traction Control (ATC), the ATC function must be disabled (ATC indicator lamp should be ON) prior to performing any vehicle maintenance where one or more wheels on a drive axle are lifted off the ground and moving.
- ▲ The power MUST be temporarily disconnected from the radar sensor whenever any tests USING A DYNAMOMETER are conducted on a vehicle equipped with a Bendix® Wingman® system.
- ▲ You should consult the vehicle manufacturer's operating and service manuals, and any related literature, in conjunction with the Guidelines above.

DESCRIPTION

The function of the Bendix® AD-HF® (High Flow) PuraGuard® oil coalescing air dryer and the AD-HF®i (High Flow Intelligent) air dryer is to collect and remove air system contaminants in solid, liquid, and aerosol form before they enter the brake system. As a module, they provide heavy vehicles with an integrated vehicle air dryer, purge reservoir, governor, and a number of the charging valve components in a complete assembly. These components have been designed as an integrated air supply system.

The air dryer provides clean, dry air to the components of the brake system – which increases the life of the system and reduces maintenance costs. The need for daily manual draining of the reservoirs is eliminated.

The air dryer is supplied with the PuraGuard oil coalescing cartridge. This cartridge contains an coalescing media at the inlet of the desiccant bed that provides a higher level of oil removal over the standard air dryer cartridge.

⚠ IMPORTANT

When servicing, note that the AD-HF and AD-HFi must be serviced with a PuraGuard oil coalescing cartridge. Do not use a standard air dryer cartridge to service the AD-HF and AD-HFi air dryers.

The function of the Cartridge Pressure Protection Valves (CPPV) is to protect each reservoir from a pressure loss in the other reservoir, or a pressure loss in an air accessory. Each of the CPPVs may have different pressure settings. These are factory set and must not be changed or adjusted. The cartridge pressure protection valve is serviceable. For ease of maintenance, the cartridge pressure protection valve can be serviced without removal of the air dryer from the vehicle.

The integrated air dryer system is made up of the following components: PuraGuard cartridge, Bendix D-2® governor (AD-HF) or solenoid governor (AD-HFi), die cast manifold, delivery check valve assembly, safety valve, heater and thermostat assembly, four (4) cartridge pressure protection valves, threaded air connections, the purge valve assembly, and an SAE-J10-compliant reservoir.

The removable purge valve assembly incorporates the purge valve mechanism and a turbocharger cut-off feature that is designed to prevent loss of engine turbo boost pressure during the purge cycle of the air dryer and reservoir system. For ease of maintenance, all replaceable assemblies can be serviced without removal of the air dryer from its mounting on the vehicle. Refer to the *Preventive Maintenance* section.

Air Connection Port ID	Function/ Connection	Port Size (NPT)	Qty.
1 IN	Inlet Port (air in)	1/2" - 14	1
1a IN	External Fill	1/4" - 18	1
21 PRI	Delivery Port Out (to Primary Reservoir)	1/4" - 18	1
22 SEC	Delivery Port Out (to Secondary Reservoir)	1/4" - 18	1
24 AUX 1	Auxiliary Delivery Port (air out)	1/4" - 18	4
23 AUX 2	Auxiliary Delivery Port (air out)	1/4" - 18	1
2-4 CON	Unloader Control Delivery	1/4" - 18	1
UNL	Unloader Control Air (Bendix® D-2A™ Governor) (AD-HF Air Dryer Only)	1/8" - 27	2
RES	Common Reservoir Pressure (Bendix D-2A Governor) (AD-HF Air Dryer Only)	1/8" - 27	2
EXH	Governor Exhaust	N/A	1

Table 1 – Port Designations

BENDIX AD-HF and AD-HFi AIR DRYER OPERATION: GENERAL

(Refer to Figure 2.)

The air dryer is designed to receive compressed air from the vehicle air compressor; clean and dry the air; deliver air to the vehicle's primary reservoir, secondary reservoir and accessories; and control the compressor/dryer charge cycle.

The air dryer and reservoir system alternates between two modes, or cycles, during operation: the *Charge Cycle* and the *Purge Cycle*. What follows describes these cycles of operation.

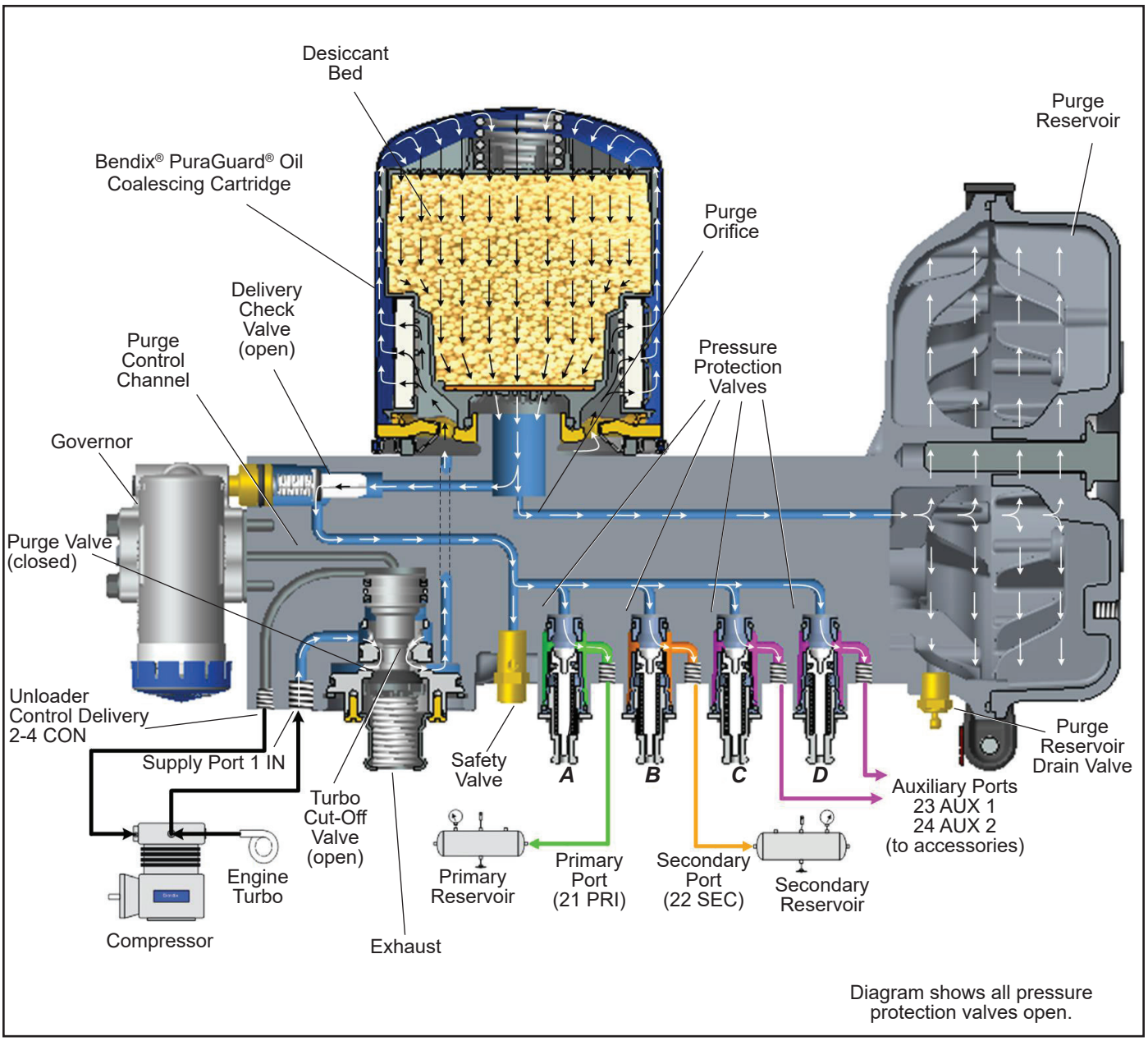

Figure 2 – Bendix® AD-HF® and Bendix® AD-HF®i Air Dryer Charge Cycle

CHARGE CYCLE *(Refer to Figure 2)*

When the compressor is running loaded (compressing air), compressed air flows through the compressor discharge line to the inlet (1/IN) port of the air dryer body. The compressed air often includes contaminates such as oil, oil vapor, water, and water vapor.

Traveling through the discharge line and into the air dryer, the temperature of the compressed air falls, causing some of the contaminants to condense and drop to the bottom of the air dryer and purge valve assembly. These contaminants are ready to be expelled at the next purge cycle. The air then flows into the desiccant cartridge, where it flows through the oil separator – or coalescing filter – which removes water in liquid form, as well as liquid oil and solid contaminants.

Air then flows into the desiccant drying bed and becomes progressively drier as water vapor adheres to the desiccant material in a process known as adsorption.

Dry air exits the desiccant cartridge – through the center of the die cast manifold – then flows to the delivery check valve, and through the purge orifice into the purge reservoir. The delivery check valve opens, supplying air to the pressure protection valves (A, B, C, D), the safety valve, and the attached governor. The purge reservoir fills, storing air that will be used to regenerate the desiccant during the purge cycle.

When the air pressure reaches the opening pressure, the four (4) pressure protection valves open and the air is supplied to the primary reservoir, secondary reservoir, and accessories. If the opening pressures of the pressure protection valves are set to different values, the valves will

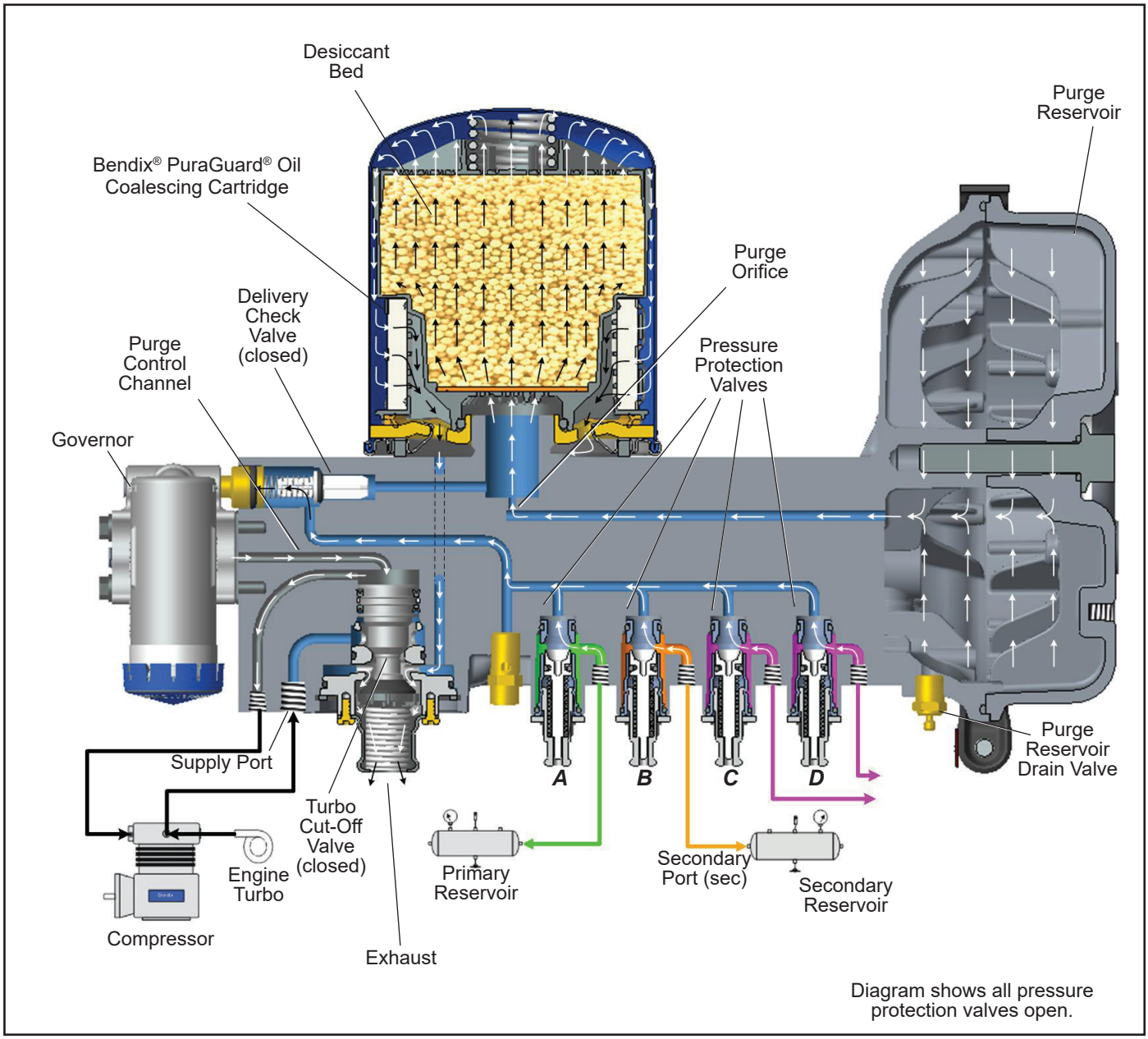

Figure 3 – Bendix® AD-HF® Air Dryer Purge Cycle

open – in order of lowest setting to highest setting – when charging a flat, or zero-pressure, system. The air dryer and purge reservoir will remain in the charge cycle until the air brake system pressure builds to the governor cut-out setting of approximately 130 psi.

PURGE CYCLE *(Refer to Figure 3)*

When the air brake system pressure reaches the cut-out setting of the governor, the governor unloads the compressor, activating the purge cycle of the air dryer and reservoir.

The governor unloads the compressor by building pressure in the line from the unloader control delivery 2-4 CON port, to the compressor unloader mechanism. This suspends the delivery of compressed air to the air dryer.

Simultaneously, the governor builds pressure in the control cavity above the purge valve. The pressure moves the air dryer purge piston down – opening the purge valve to atmosphere – and closing off the compressor air supply with the turbo cut-off valve (*covered in the Turbo Cut-off Valve section of this document*). Water and contaminants captured are expelled immediately when the purge valve opens. In addition, air – which was flowing through the desiccant cartridge – changes direction and begins to flow toward the open purge valve. Contaminants collected by the air dryer are removed by air flowing from the purge reservoir through the desiccant drying bed to the open purge valve.

The initial purge and desiccant cartridge decompression lasts only a few seconds, evidenced by an audible burst of air at the air dryer exhaust.

The actual regeneration of the desiccant drying bed begins as dry air from the purge reservoir then flows through the purge orifice into the desiccant bed. Pressurized air from the purge reservoir expands after passing through the purge orifice; its pressure lowers and its volume increases. The flow of dry air through the drying bed regenerates the desiccant material by removing any water vapor adhering to it. *See Table 2 for the time required for the entire contents of the purge reservoir of a Bendix® AD-HF® and Bendix® AD-HF® i air dryer to flow through the desiccant drying bed.*

The delivery check valve assembly prevents air pressure in the brake system from returning to the air dryer during the purge cycle. The air dryer remains in the purge mode until the air system pressure drops below the governor cut-in pressure, thereby placing both the compressor and the air dryer in the charge mode. After the purge reservoir pressure is depleted, the air dryer desiccant has been regenerated and is now ready for the next charge cycle.

TURBO CUT-OFF VALVE *(Refer to Figure 3)*

The primary function of the turbo cut-off valve is to prevent loss of engine turbocharger air pressure through the air dryer when the dryer is in the purge mode.

At the onset of the purge cycle, the downward travel of the purge piston is stopped when the turbo cut-off valve (the tapered portion of the purge piston) contacts its mating metal seat in the purge valve housing. With the turbo cut-off valve seated (in the closed position), air in the compressor discharge line – as well as the air dryer inlet port – cannot enter the air dryer. By completing these actions, the turbo cut-off effectively maintains turbocharger boost pressure to the engine.

ISO PNEUMATIC SCHEMATIC

Figure 4 shows an ISO schematic diagram of how the AD-HF air dryer functions. *Figure 5* shows an ISO schematic of how the AD-HFi air dryer functions.

PREVENTIVE MAINTENANCE

Important: Review the warranty policy before performing any intrusive maintenance procedures. An extended warranty may be voided if intrusive maintenance is performed during this period. Purge valve maintenance is permissible during the warranty period only when using a genuine Bendix® purge valve kit.

Bendix® AD-HF® and AD-HF®i Air Dryer Purge Reservoir Size and Purge Time

AD-HF and AD-HFi Air Dryer Purge Reservoir Options	Description	Purge Reservoir Size (in^3)	Approximate Purge Time (*See Note 2*)
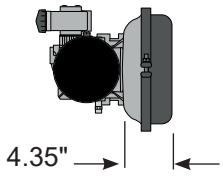	Air dryer with standard purge volume	200 in^3	35 seconds
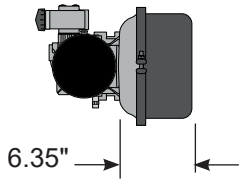	Air dryer with extended purge volume	300 in^3	55 seconds
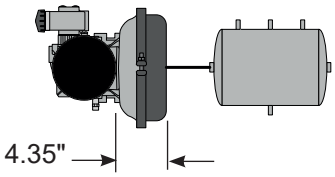	Air dryer with standard purge volume and extended purge volume mounted remotely	200 in^3 (standard purge) + 288 in^3 (remote purge) = 488 in^3 total volume (*See Note 1*)	85 seconds

Note 1: The remote purge reservoir volume can vary based on vehicle manufacturer options. Purge time is directly related to the purge reservoir volume: The larger the purge volume the longer the time needed to purge.

Note 2: Purge times are approximate and based on a new system with minimal leakage.

Table 2 – Purge Volume Size and Purge Time

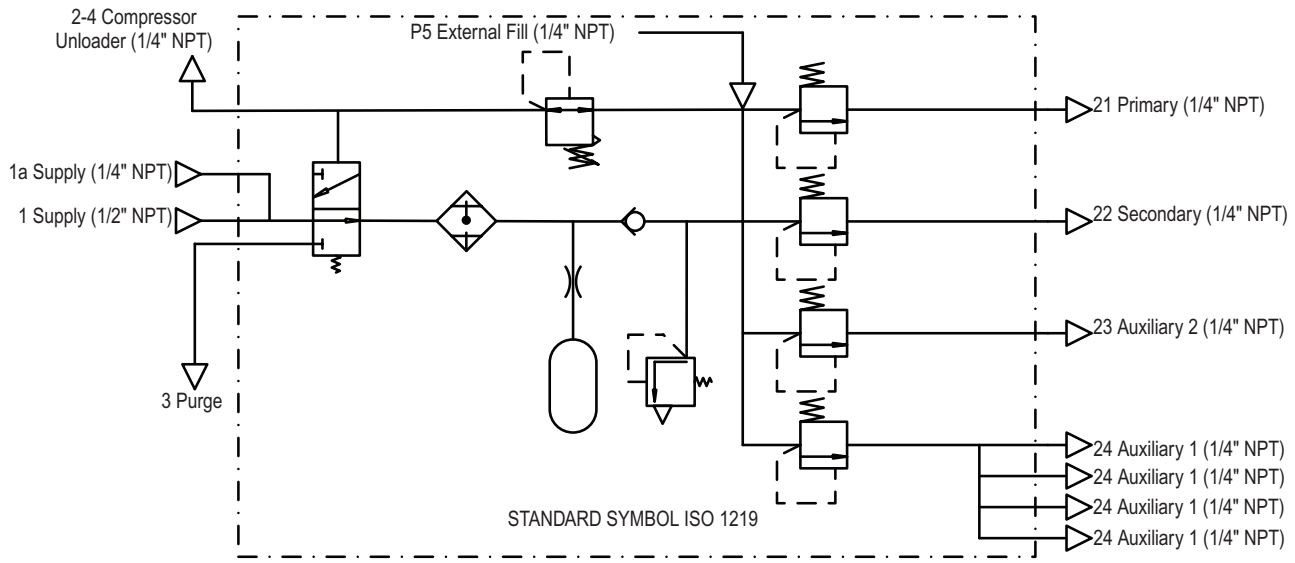

Figure 4 – Bendix® AD-HF® Air Dryer ISO Schematic

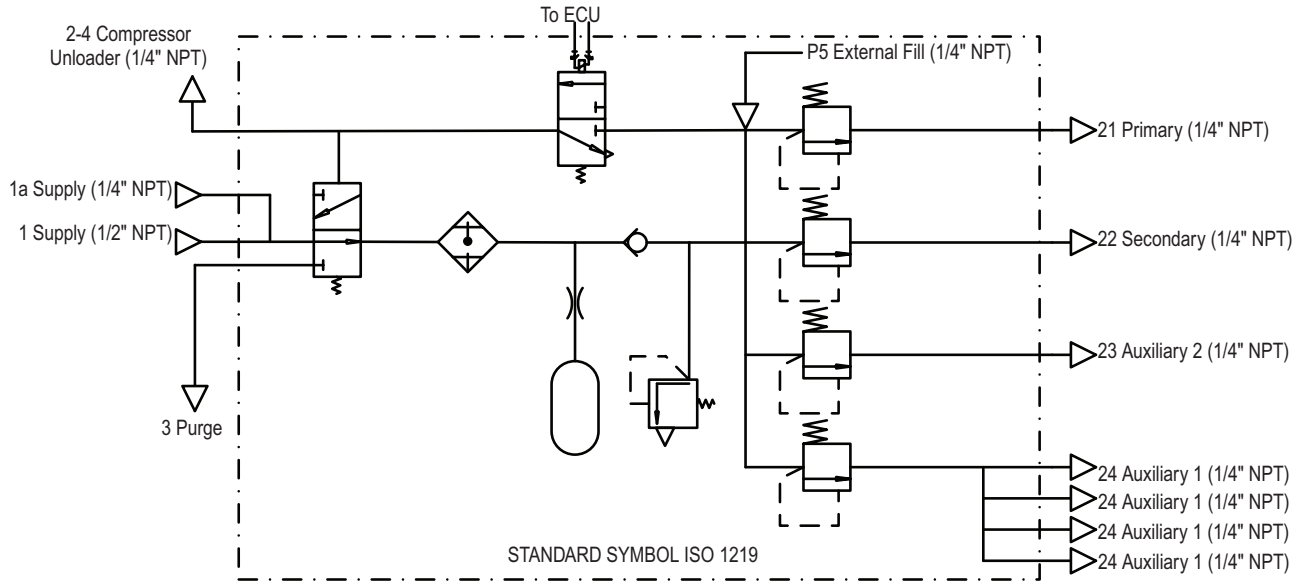

Figure 5 – Bendix® AD-HF®i Air Dryer ISO Schematic

Because no two vehicles operate under identical conditions, maintenance and maintenance intervals will vary. Experience is a valuable guide in determining the best maintenance interval for any one particular operation.

RESERVOIR DRAINING

1. Per the guidelines shown in *Table 3*, check for moisture in the air brake system by opening the reservoir drain valves and checking for the presence of water. If moisture is present, the desiccant cartridge may require replacement; however, the following conditions can also cause water accumulation and should be considered before replacing the desiccant:

   A. An outside air source has been used to charge the system. This air did not pass through the drying bed.

   B. Air usage is exceptionally high and not normal for a highway vehicle.

   This may be due to accessory air demands or some unusual air requirement that does not allow the compressor to load and unload (compressing and non-compressing cycle) in a normal fashion. Check for high air system leakage. If the vehicle vocation has changed, it may be necessary to upgrade the compressor size. For direct telephone technical support, the Bendix Tech Team is available at 1-800-AIR-BRAKE (1-800-247-2725) option 2, Monday through Thursday, 8:00 A.M. to 6:00 P.M. and Friday, 8:00 A.M. to 5:00 P.M. ET. Visit bendix.com for additional information.

Recommended Service Intervals for Bendix® AD-HF® and AD-HF®i Air Dryers						
Air Usage	Typical Vehicle Vocation	Axles	*Reservoir Drain Interval (whichever comes first)			PuraGuard® Oil Coalescing Cartridge Replacement
			Hours	Mileage	Time	
Standard	Line haul, city, delivery	5 or less	900	25,000	3 months	24 months or 200,000 miles
Medium	Double trailers, light transit, light off-highway	8 or less	450	12,000	2 months	18 months or 150,000 miles
High	Multiple trailers, city transit, heavy-duty off-road	11 or less	300	6,000	1 month	12 months
*Change the desiccant cartridge more frequently if more than just traces of moisture are found in any of the reservoirs when draining them.						

Table 3 – Service Intervals

C. The location of the air dryer is too close to the air compressor. For direct telephone technical support, the Bendix Tech Team is available at 1-800-AIR-BRAKE (1-800-247-2725) option 2, Monday through Thursday, 8:00 A.M. to 6:00 P.M. and Friday, 8:00 A.M. to 5:00 P.M. ET. Visit bendix.com for additional information.

D. In areas where more than a 30-degree range of temperature occurs in one day, small amounts of water can temporarily accumulate in the air brake system due to condensation. Under these conditions, the presence of small amounts of moisture is normal.

DESICCANT CARTRIDGE REPLACEMENT

Adhering to a preventive maintenance schedule is crucial to keeping a vehicle's air system clean and ensuring superior performance of all components that utilize system air – such as brakes, emissions equipment, and automated manual transmissions.

Bendix® AD-HF® Air Dryer: *See Table 3 for Bendix AD-HF air dryer recommended cartridge replacement intervals for vehicles equipped with a Bendix® compressor.*

Bendix® AD-HF®i Air Dryer: The Bendix AD-HFi air dryer, in conjunction with the Bendix® EC-80™ ECU, provides the Cartridge Life Prediction (CLP) advanced function. This function calculates the remaining effective moisture-removing lifetime of the air dryer desiccant cartridge and will alert the operator or service technical with Diagnostic Test Codes (DTCs) related to the cartridge service lifetime remaining. *Refer to Service Data Sheet SD-08-12000 for further information regarding the advanced functions of the AD-HFi air dryer.*

More frequent replacement intervals may be required depending on the vehicle's age, its compressor condition, use of a non-Bendix compressor, the operating environment, the vehicle's vocation, and its usage. In conjunction with these guidelines, fleets can determine the functionality of their filters by checking for moisture in the air brake system monthly. If moisture is present, the air dryer desiccant cartridge may require replacement.

1. Visually check for physical damage, such as chafed or broken air and electrical lines, and broken or missing parts.
2. Perform the *Operation and Leakage Tests* listed in this publication.

⚠ WARNING

This air dryer is intended to remove moisture and other contaminants normally found in the air brake system. Do not inject alcohol, anti-freeze, or other de-icing substances into – or upstream of – the air dryer. Alcohol is removed by the dryer, but reduces the effectiveness of the device to dry air. Use of these or other substances can damage the air dryer and may void the warranty.

OPERATION AND LEAKAGE TESTS *(REFER TO THE TROUBLESHOOTING CHART IN THIS MANUAL)*

For additional information *see video BW2327* – available through the Literature Center on bendix.com.

1. Check all lines and fittings leading to and from the air dryer for leakage and integrity. Repair any leaks found.
2. Build up system pressure to governor cut-out and note that the air dryer purges (with an audible burst of air). Watch the system pressure and note the pressure fall-off for a ten minute period. If pressure drop exceeds – a) for a single vehicle: 1 psi/minute from either service reservoir; or b) for tractor trailer: 3 psi/minute from either service reservoir – inspect the vehicle air systems for leak sources and repair them. *Refer to Symptoms 1 and 4 in the Troubleshooting Chart.*

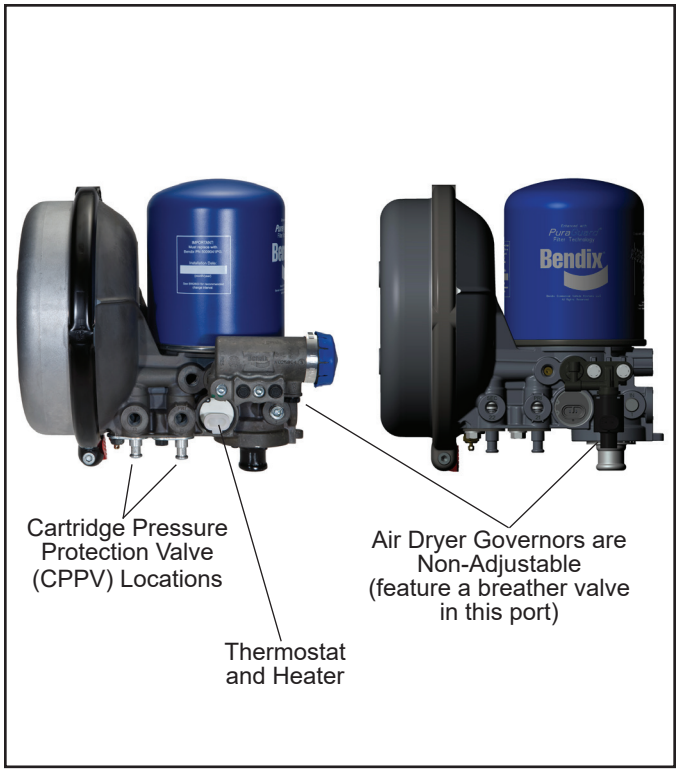

Figure 6 – Pressure Protection Valve Locations

CAUTION

3. **Be sure to wear safety glasses in case of a purge blast.** Check for excessive leakage around the purge valve with the compressor in the charge mode (compressing air). Apply a soap solution to the purge valve exhaust port and observe that leakage does not exceed a 1" bubble in one second. If any leakage exceeds the maximum specified, *refer to Symptom 4 in the Troubleshooting Chart.*

4. Build up system pressure to governor cut-out and note that the air dryer purges (with an audible burst of air), followed immediately by air flowing out of the purge valve. *See Table 2 for the time required for the entire contents of the purge reservoir of the air dryer to flow through the desiccant drying bed.* Fan the service brakes to reduce system air pressure to governor cut-in. Note that the system once again builds to full pressure and is followed by a purge. If the system does not follow this pattern, *refer to Symptoms 5 and 6 in the Troubleshooting Chart*.

5. Check the operation of the end cover heater and thermostat assembly during cold weather operation as follows:

   A. Electric Power to the Dryer (*Refer to Figure 4*)

   With the ignition or engine kill switch in the RUN position, check for voltage to the heater and thermostat assembly using a voltmeter or test light. Unplug the electrical connector at the air dryer and place the test leads on each of the connections of the female connector on the vehicle power lead. If there is no voltage, look for a blown fuse, broken wires, or corrosion in the vehicle wiring harness. Check to see if a good ground path exists.

   B. Thermostat and Heater Operation

   Note: *These tests are not possible except in cold weather operation.*

   Turn off the ignition switch and cool the thermostat and heater assembly to below 40°F. Using an ohmmeter, check the resistance between the electrical pins in the air dryer connector half. The resistance should be 1.5 to 3.0 ohms for the 12 volt heater assembly, and 6.0 to 9.0 ohms for the 24 volt heater assembly. *See Figure 6 for the thermostat and heater location.*

   Warm the thermostat and heater assembly to approximately 90°F and check the resistance again. The resistance should exceed 1,000 ohms. If the resistance values obtained are within the stated limits, the thermostat and heater assembly is operating properly. If the resistance values obtained are outside the stated limits, replace the heater and thermostat assembly.

6. Cartridge Pressure Protection Valves (CPPV). Observe the pressure gauges of the vehicle as system pressure builds from zero. The primary or secondary gauge should rise until it reaches approximately 106 psi (±6 psi), then level off (or a momentary slight fall) as the next pressure protection valve opens – supplying its reservoir. When that pressure gauge passes through approximately 106 psi (±6 psi), there should be an associated leveling off (or momentary slight fall) of pressure as the third and fourth pressure protection valves open. Then the primary and secondary gauges should increase together until they reach their full pressure of approximately 130 psi (±5 psi).

   If the air dryer and reservoir system does not perform within the pressure ranges as described above, recheck using gauges known to be accurate. If the readings remain outside of the ranges outlined, replace the cartridge pressure protection valves. A new feature of the Bendix® AD-HF® and AD-HF®i air dryer is serviceable Cartridge Pressure Protection Valves.

GENERAL

When rebuilding or replacing components of the air dryer and reservoir, use only genuine Bendix® brand replacement parts. For ease in servicing, the air dryer and reservoir have been designed so that maintenance kits can be installed without removing the air dryer and reservoir from the vehicle.

⚠ CAUTION

Always depressurize the air dryer and purge reservoir – and all other reservoirs on the vehicle – to 0 psi before servicing the air dryer.

If – after completing the routine operation and leakage tests – it has been determined that one or more components of the air dryer requires replacement or maintenance, refer to the Maintenance Kit listing shown in this manual or the *Bendix Quick Reference Guide (BW1114)* for the appropriate kit(s). *The Quick Reference Guide* can be ordered and viewed online in the Document Library on bendix.com.

TESTING THE AIR DRYER

Before placing the vehicle into service, perform the following tests:

1. Close all reservoir drain valves.
2. Build up system pressure to governor cut-out and note that the air dryer purges (with an audible burst of air), followed immediately by air flowing out of the purge valve. This purge time is related to the purge volume as shown in Table 2.
3. Apply and release the service brakes to reduce system air pressure to governor cut-in. Note that the system once again builds to full pressure and is followed by a purge at the air dryer exhaust.
4. It is recommended that the total air system be tested for leakage to ensure that the air dryer will not cycle excessively.

BRAKING SYSTEM PROTECTION

The air dryer allows the system to maintain one brake circuit, up to about 100 psi, even after a pressure loss in the other brake circuit. This allows a vehicle to be moved (in an emergency), but with reduced braking capacity. Compare this to a conventional system, where a loss of pressure in one service tank leaves the vehicle with a limited number of reduced braking capacity applications before the parking brakes automatically apply and stay on. *See Bendix publication BW5057 "Air Brake Handbook*."

Maintenance Kits/Service Replacement Parts	
Description	**Piece No.**
Delivery Check Valve Replacement Kit (Bendix® AD-HF® air dryer only)	K092011
Desiccant Cartridge Replacement Kit	5009041PG
Drain Valve	5004961N
Governor Gasket (AD-HF air dryer only)	5007834
Governor Replacement Kits:	
Cut-in 105 psi, Cut-out 130 psi	K194718
Cut-in 105 psi, Cut-out 125 psi	K194719
Cut-in 120 psi, Cut-out 140 psi	K194720
Bendix® AD-HF®i Governor and Delivery Check Valve Replacement Kit	K207883
Heater and Thermostat Replacement Kits:	
12 Volt	109495
24 Volt (AD-HF air dryer only)	109496
Mounting Studs Kit	K194717
Cartridge Pressure Protection Valves Replacement Kits:	
103 psi (Qty. 1), 112 psi (Qty. 3)	K194713
103 psi (Qty. 3), 112 psi (Qty. 1)	K194714
103 psi (Qty. 2), 112 psi (Qty. 2)	K194715
Purge Valve Replacement Assemblies:	
Assemblies for climate conditions above -40°C (-40°F)	
Standard Purge Valve Replacement Kit	K022105
Discharge Line Unloader Purge Valve Replacement Kit	K031562
Arctic Assemblies for climate conditions of -40°C to -50°C (-40°F to -58°F)	
Standard Purge Valve Replacement Kit	K031559
Discharge Line Unloader (DLU) Purge Valve Replacement Kit	K031563
Safety Valve	800350
Silencer Kit	K186791
Wiring Harness and Splice Kit	109871N

ROADSIDE INSPECTION

In the event of a roadside inspection the system behavior will be as follows: When the system is charged to governor cut-out and then one reservoir drain valve is opened, initially both reservoir gauges will fall; however, the air dryer primary and secondary pressure protection valves will close at pressures above 70 psi, protecting the remaining brake circuit from further loss of pressure.

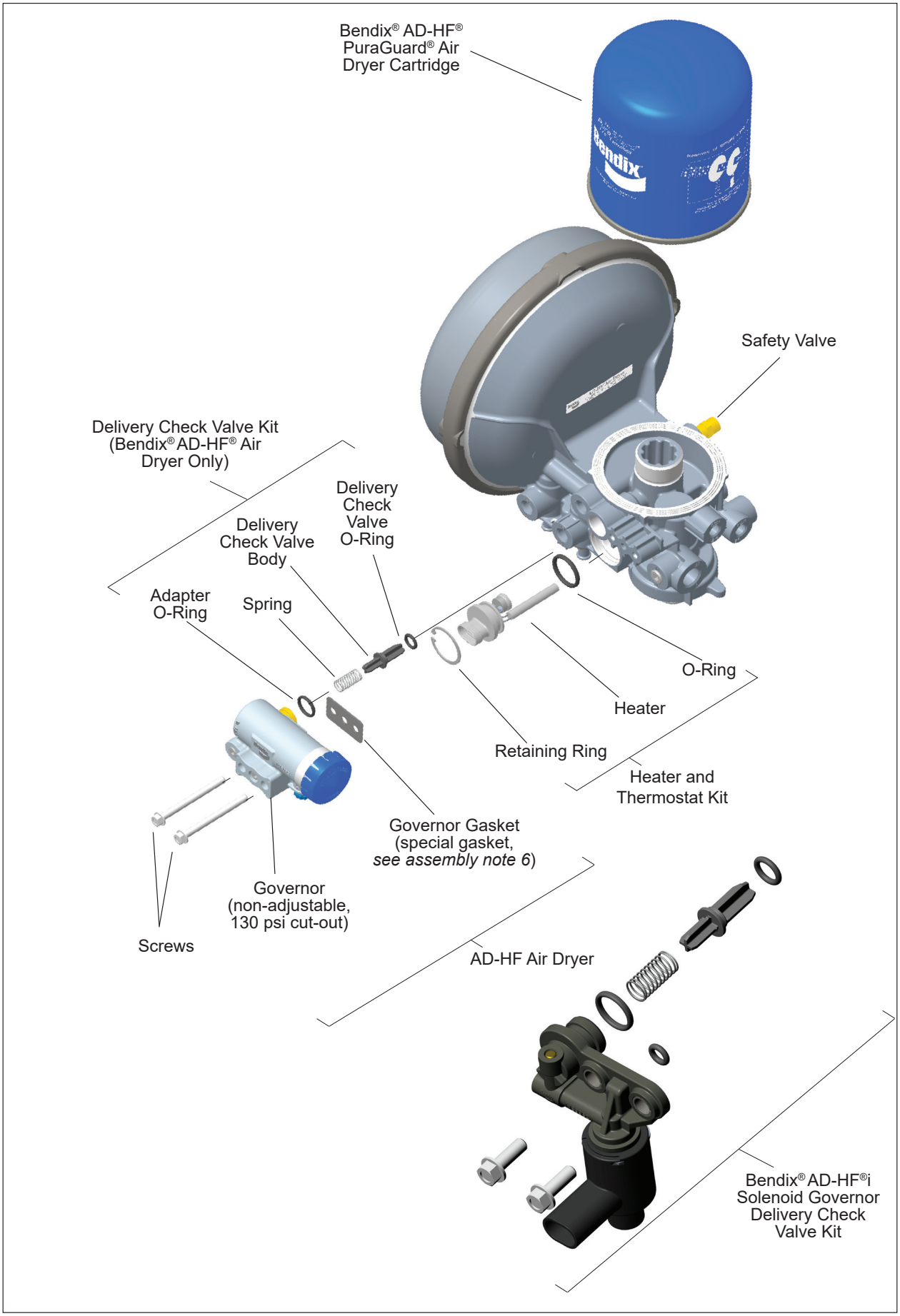

Figure 7 – Bendix® AD-HF® and AD-HF®i Air Dryer Service Kits

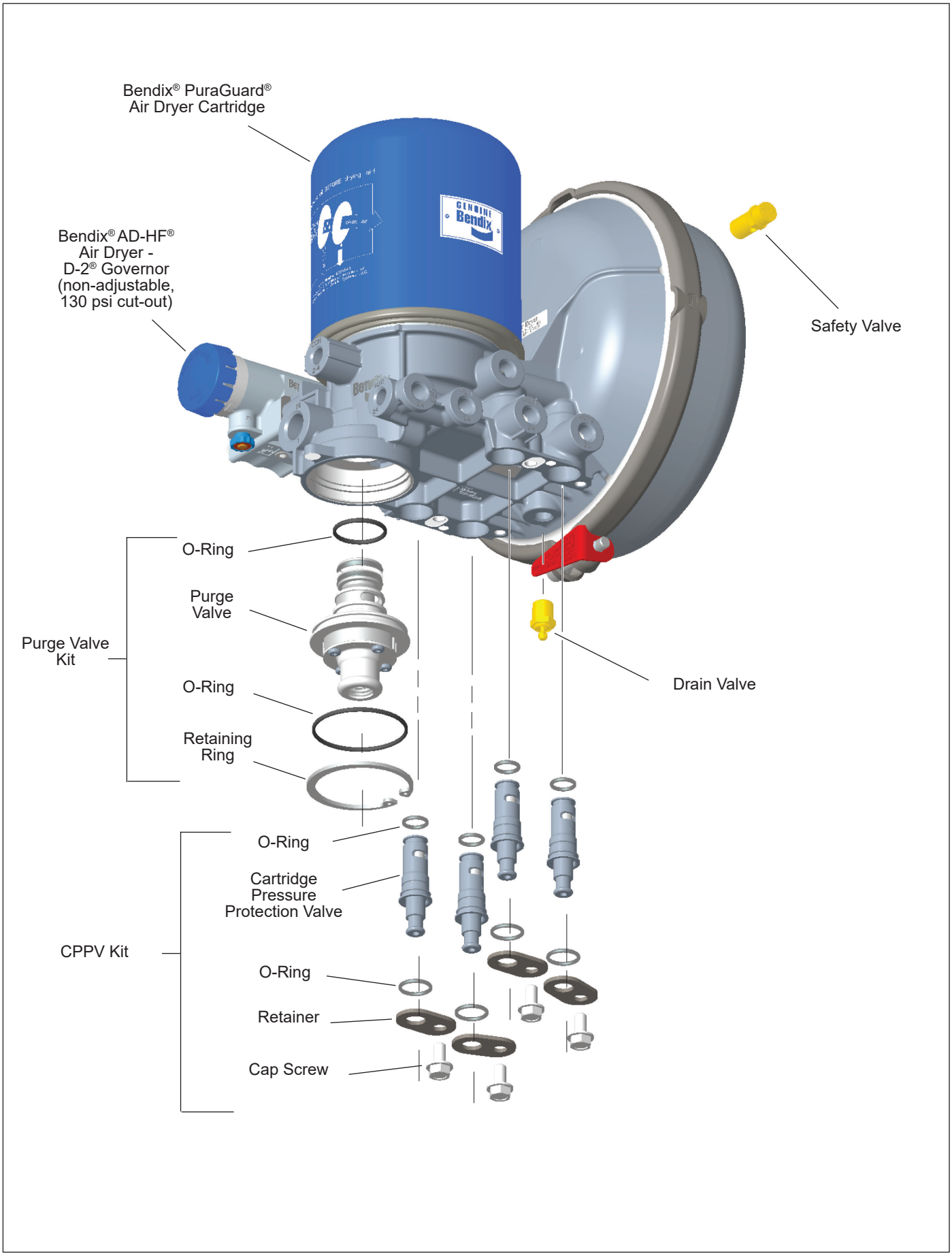

Figure 8 – Bendix® AD-HF® AD-HF®i Air Dryer Service Kits

TEMPORARY AIR DRYER BYPASS

To temporarily bypass the air dryer, follow these procedures: Adhere to the General Safety Guidelines outlined in this document.

Make sure that all residual pressure has been released and the air dryer purge reservoir has been drained to 0 psi, then remove the air supply line from the compressor to the inlet port (1/IN). Remove the safety valve from the air dryer (*see Figure 1 for location*). Note that a short puff of trapped air may vent from the safety valve port when removing the valve. Install a T-fitting into the port. Using any adapters necessary, reinstall the safety valve in one of the branches of the T-fitting. Using any adapters necessary, install the air supply line into the remaining T-fitting port. After testing the T-fitting for any air leakage – by using a soap solution after charging to system cut-out pressure (a 1" bubble in 10 seconds is acceptable) – the vehicle may be returned to temporary service.

Note: *This is a temporary bypass of the air dryer. Full repair of the unit must be carried out at the earliest opportunity.*

With the air dryer removed from the system, contaminants will be entering the air brake system: reservoirs will need to be manually drained daily until the repairs are completed. At the end of each working day, park the vehicle and slowly drain pressure through the drain valves – leave open to the atmosphere – for several hours, if possible. When repairs are carried out, be sure to check that all reservoirs (including the air dryer purge reservoir) are emptied of all contaminants.

If, after bypassing the air dryer the system pressure still does not build, use the following procedure to remove, clean, and reinstall the delivery check valve.

DELIVERY CHECK VALVE CLEANING PROCEDURE

*(**Note:** This is only required if system pressure does not build after temporary bypass is completed.)*

Refer to Figure 7 throughout the following procedures. Depressurize the air brake system following the General Safety Guidelines outlined elsewhere in this document. Also, always depressurize the air dryer purge reservoir before servicing the air dryer.

This procedure does not require removal of the air dryer and reservoir from the vehicle.

1. Remove the bolts attaching the governor to the air dryer and retain for reassembly.
2. For the Bendix® AD-HF®i air dryer, detach the electrical connector from the solenoid governor.
3. Remove the governor from the air dryer. Be aware that a short puff of trapped air may vent when the governor is removed. Retain the governor gasket (Bendix® AD-HF® air dryer) or the face seal o-ring (AD-HFi air dryer) for reassembly if a new governor gasket is not available. Remove and retain the o-ring from the adapter.
4. The spring / delivery check valve can now be removed.
5. Remove and retain the o-ring from the delivery check valve body.

CLEANING AND INSPECTION

1. Use a suitable solvent to clean all metal parts and use a cotton swab to clean the bore (Note: Do not use abrasives or tools to clean the bore: any scratches caused may necessitate replacing the air dryer.) Superficial external corrosion and/or pitting is acceptable.
2. Clean the o-rings with a clean dry cloth. Do not use solvents.
3. Inspect for physical damage to the bore and the check valve seat. If the bore is damaged (by scratches, etc. that would prevent the delivery check valve from seating), replace the air dryer.
4. Inspect the delivery check valve, o-rings, etc. for wear or damage. Replace, if necessary, using the check valve replacement kit available at any authorized Bendix® parts outlets.
5. Inspect all air line fittings for corrosion and replace as necessary.

ASSEMBLY

1. Lubricate the delivery check valve o-ring and delivery check valve body with a heavy-duty lithium grease.
2. Install this o-ring on the delivery check valve body by sliding the o-ring over the set of four tapered guide lands. The o-ring groove holds the o-ring in its correct location.
3. At the other end of the check valve body, the spring is installed over the set of four straight guide lands. When the spring has been pushed to the correct location, the check valve body is designed to hold the end of the spring in position: be sure that the spring is not loose before continuing with this installation.
4. Install the assembled check valve body/o-ring/spring into the delivery port so that the o-ring rests on its seat and the free end of the spring is visible.
5. Grease the adapter and the adapter o-ring and install it onto the fitting.

6. For the Bendix® AD-HF® air dryer, position the governor gasket.

IMPORTANT

Do not replace with a standard compressor/governor gasket.

For the Bendix® AD-HF®i air dryer, grease the face seal o-ring and position it.

7. Insert the governor mounting bolts through the governor and tighten to 125 in-lbs.
8. For the AD-HFi air dryer, reattach the connector to the solenoid governor.
9. Before placing the vehicle back into service, check to see that the system pressure now builds to full operational pressure.

REPLACEMENT OF THE CARTRIDGE PRESSURE PROTECTION VALVE (CPPV)

Refer to Figure 8 throughout the following procedures.

Air Brake System Drainage

1. Apply the parking brake and place the shift control lever in park or neutral (if the vehicle is a Class 7 with no park position).
2. Completely drain all reservoirs, including the air dryer purge reservoir. To drain the system, make several brake applications to rapidly reduce air pressure then use the manual drain valves to completely empty the reservoirs.

CPPV Removal

3. Remove the screw that secures the CPPV retainer plate to the air dryer body.
4. Twist and pull the CPPV from the air dryer body.

CPPV Installation

5. Lubricate the o-ring with silicone grease per Bendix material specification BW-650-M.
6. Install the CPPV in the appropriate bore and secure with the retainer plate and bolt. Note that the valves have numbers on the upper portion of the shaft that represent the nominal opening pressure. These numbers are also included on the body to aid in proper installation.
7. Torque the CPPV screw to 80-120 in-lbs per Bendix process specification BW-338-P.

Check for Leakage

8. Start the engine and allow the compressor to fully charge the air reservoirs to the governor cut-out setting.
9. Inspect for leaks and repair if required.

BENDIX® AD-HF® AND AD-HF®i AIR DRYER TROUBLESHOOTING CHART		
SYMPTOM	**CAUSE**	**REMEDY**
1. Air Dryer is constantly cycling or purging.	A. Excessive system leakage.	A. Test for excessive system leakage. Allowable leakage observed at the dash gauge: - Single vehicle - 1 psi/minute. - Tractor/trailer - 3 psi/minute. Using a soap solution, test the vehicle for leakage at the fittings, drain valves and system valves, and any accessories (i.e. air suspension) connected to the air dryer auxiliary ports. If an accessory is suspected to be the cause of leakage, disconnect that accessory from the air dryer, plug the auxiliary port that it was in, and retest the air dryer for proper purge cycling. Repair or replace as necessary.
	B. Defective delivery check valve.	B. Build system pressure to governor cut-out. Wait one (1) minute for the completion of the purge cycle. Using a soap solution at the exhaust of the purge valve, leakage should not exceed a one inch bubble in less than five (5) seconds. If a rapid loss of pressure is found, the following procedure will determine if the delivery check valve is malfunctioning: Build system pressure to governor cut-out and allow a full minute for the normal dryer purge cycle to empty the purge reservoir. Switch off the engine and apply and release the brakes so that the system pressure reaches governor cut-in. The purge valve will return to its closed position. The purge reservoir has a drain valve which is opened by moving the center lever away from its closed position. Open the drain valve and wait 10 seconds to allow any residual purge pressure to be released. Release the lever, closing the drain valve. Carefully remove the air dryer cartridge using a strap wrench and then test for air leaking through the center of the threaded boss by applying a soap solution to the area. Replace the delivery check valve if there is excessive leakage (exceeding a one inch bubble in five (5) seconds). Grease the seal on the air dryer cartridge before reinstalling. Be sure the drain valve on the purge reservoir is not leaking before restoring the vehicle to service.
	C. Defective governor.	C. Check the governor at both the “cut-in” and “cut-out” position for (i) proper pressures and (ii) excessive leakage at fittings and exhaust.
	D. Compressor unloader mechanism leaking excessively.	D. Remove the air strainer, or fitting, from the compressor inlet cavity. With the compressor unloaded, check for unloader piston leakage. Slight leakage is permissible.

BENDIX® AD-HF® AND AD-HF®i AIR DRYER TROUBLESHOOTING CHART		
SYMPTOM	**CAUSE**	**REMEDY**
2. Water in the vehicle reservoirs.	A. Maximum air dryer inlet temperature is exceeded due to improper discharge line length.	A. Check for excessive carbon build-up in the compressor discharge line. Replace if required. Make certain that the discharge line length is at least 6 ft. Increase the discharge line length and/or diameter to reduce air dryer inlet temperature.
	B. Air system charged from outside air source (outside air not passing through the air dryer).	B. If the system must have an outside air fill provision, the outside air should pass through the air dryer.
	C. Excessive air usage – Air dryer not compatible with the vehicle air system requirement (Improper air dryer/ vehicle application).	C. *Refer to the Bendix Advanced Troubleshooting Guide for Air Brake Compressors (BW1971)* for proper application of the Bendix® AD-HF® and AD-HF®i air dryer. An extended purge model (Bendix® AD-HF® EP, AD-HF®i EP) is available for many higher air usage vehicles, such as city buses and construction vehicles. If the vehicle is equipped with high air usage accessories, such as trailer pump-off systems or central tire inflation, the air for these accessories must by-pass the dryer reservoir system.
	D. Desiccant requires replacement.	D. Replace the desiccant cartridge assembly.
	E. Air bypasses desiccant cartridge assembly.	E. If the vehicle uses a Holset® compressor, inspect the feedback check valve for proper installation and operation.
	F. Air dryer not purging.	F. *Refer to Symptom 6.*
	G. Purge (air exhaust) time is insufficient due to excessive system leakage.	G. *Refer to Symptom 1.*
3. Safety valve on the air dryer is “popping off” or exhausting air.	A. Defective air dryer delivery check valve.	A. Test to determine if air is passing through the check valve. Repair or replace. *Refer to Symptom 1, Remedy B.*
	B. Safety valve setting too low (<150 psi).	B. Replace the safety valve.
	C. System pressure too high (>135 psi).	C. Test with an accurate gauge. Replace the governor if necessary.
	D. Excessive pressure pulsations from compressor. (Typical single cylinder type).	D. Increase the volume in the discharge line. This can be accomplished by adding a 90 cubic inch (or larger) reservoir between the compressor and the air dryer.
4. Constant exhaust of air at the air dryer purge valve exhaust or unable to build system pressure. (Charge mode.)	A. Air dryer purge valve leaking excessively.	A. With the compressor loaded, apply a soap solution on the purge valve exhaust, to test for excessive leakage. Repair or replace the purge valve as necessary.
	B. Purge valve frozen open – faulty heater and thermostat, wiring, or blown fuse.	B. *Refer to paragraph 5 of the Operation and Leakage Tests for the heater and thermostat test.*
	C. Defective air dryer delivery check valve.	C. *Refer to Symptom 1, Remedy B.*
	D. Leaking turbo cut-off valve.	D. Repair or replace the purge valve assembly.
	E. Defective governor.	E. Check the governor at both “cut-in” and “cut-out” positions for (i) proper pressures and (ii) excessive leakage at fittings and exhaust.
	F. Leaking purge valve control piston seals.	F. Repair or replace the purge valve assembly.

BENDIX® AD-HF® AND AD-HF®i AIR DRYER TROUBLESHOOTING CHART		
SYMPTOM	**CAUSE**	**REMEDY**
5. Cannot build system air pressure.	A. Supply pressure to the air dryer is not sufficient.	A. Ensure the supply pressure to the air dryer is greater than 110 psi after the system charges.
	B. Kinked or blocked (plugged) discharge line.	B. Check to determine if air passes through the discharge line. Check for kinks, bends, excessive carbon deposits, or ice blockage.
	C. Excessive bends in discharge line (water collects and freezes).	C. Discharge line should be constantly sloping from compressor to air dryer with as few bends as possible.
	D. Pressure protection valve(s) in air dryer will not open.	D. Replace the pressure protection valves.
	E. *Refer to Symptom 4.*	E. *Refer to Symptom 4, Remedy A.*
	F. *Refer to Symptom 7.*	F. *Refer to Symptom 7, Remedies A and B.*
6. Air dryer does not purge or exhaust air.	A. Faulty air dryer purge valve.	A. After determining air reaches purge valve control port by installing a T-fitting with a pressure gauge into the governor unloader port, repair purge valve if necessary.
	B. *See Causes B, E, and F for Symptom #4.*	B. *Refer to Symptom 4, Remedies B, E, and F. Also refer to Symptom 1, Remedy B.*
7. Desiccant material being expelled from the air dryer purge valve exhaust (may look like whitish liquid or paste or small beads.)	A. Faulty dryer cartridge.	A. Replace the air dryer cartridge or air dryer.
	B. Excessive dryer vibration.	B. Check the air dryer mounting for looseness or damage. Repair the mounting and replace the cartridge.
8. Unsatisfactory desiccant life.	A. Excessive system leakage.	A. *Refer to Symptom 1, Remedy A.*
	B. Wrong vehicle application for a Bendix® AD-HF® or AD-HF®i air dryer.	B. *Refer to Symptom 2, Remedy C.*
	C. Compressor passing excessive oil.	C. Check for proper compressor installation; if the symptoms persist, replace the compressor. *Refer to Bendix Advanced Troubleshooting Guide for Air Brake Compressor (BW1971)*.
9. "Pinging" noise excessive during compressor loaded cycle.	A. Single cylinder compressor with high pulse cycles.	A. A slight "pinging" sound may be heard during the system build-up when a single cylinder compressor is used. If this sound is deemed objectionable, it can be reduced substantially by increasing the discharge line volume. This can be accomplished by adding a 90 cubic inch (or larger) reservoir between the compressor and the air dryer.
10. The air dryer purge piston cycles rapidly in the compressor unloaded (non-compressing) mode.	A. Compressor fails to unload.	A. Check the air hose from the governor to the compressor for a missing, kinked, or restricted line. Install or repair the air hose. Repair or replace the compressor unloader.

NOTE: *For AD-HFi air dryer software diagnostic test codes and troubleshooting, refer to Bendix Service Data sheet SD-08-12000.*

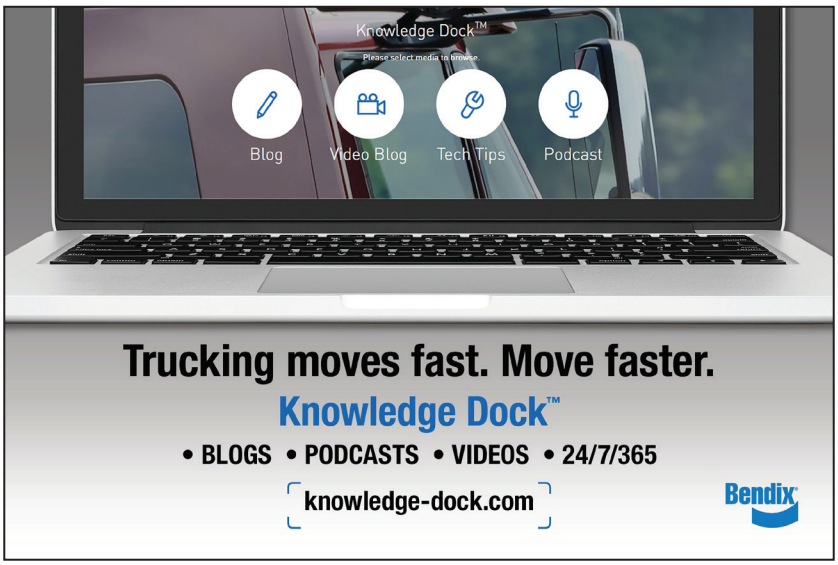

Log-on and Learn from the Best

On-line training that's available when you are – 24/7/365.
Visit brake-school.com.

SD-08-12046 Rev. 000 © 2020 Bendix Commercial Vehicle Systems LLC, a member of Knorr-Bremse • 11/20 • All Rights Reserved

Printed on recycled paper