TOYOTA
Technical Service Bulletin

2021 Supra Pre-Delivery Service (PDS)

Service Category General

Section Pre-Delivery Service **Market** USA

Toyota Supports ASE Certification

Applicability

YEAR(S)	MODEL(S)	ADDITIONAL INFORMATION
2021	Supra	

REVISION NOTICE

December 14, 2020 Rev1:

- **The entire bulletin has been updated.**

Any previous printed versions of this bulletin should be discarded.

Introduction

Pre-Delivery Service (PDS) is a critical step in satisfying our new car customers. Customer feedback indicates the following areas deserve special attention when performing PDS:

- Careful inspection for paint chips/scratches and body dents/dings.
- Proper operation of electrical accessories (including interior light, clock, and radio reset).
- Interior cleanliness.
- Proper function of mechanical systems.

Customer retention and proper maintenance of vehicles are and have always been a major focus for Toyota. To help remind customers that regular service is essential to the proper maintenance of the vehicle, dealers are required to install a service reminder sticker before delivery. By doing this, customers will be reminded to return to your dealership for service. Your current service reminder sticker may be used. (See PDS Check Sheet item 8 of “Final Inspection and Cleaning.”)

© 2020 Toyota Motor Sales, USA

2021 Supra Pre-Delivery Service (PDS)

Introduction (continued)

This bulletin contains the PDS procedures that apply specifically to the 2021 Supra. A universal PDS Check Sheet has been developed for all 2021 model year Toyota vehicles and contains PDS steps which apply to all Toyota models. To properly perform a complete PDS, you must complete all procedures contained in this TSB, as well as the universal PDS Check Sheet.

In addition, if the vehicle is stored for over 30 days, be sure to follow Supra Long-Term Vehicle Storage Guidelines.

NOTE

To perform navigation map activation during the transport mode deletion procedure, the following items MUST be completed in advance. Refer to the Ordering License Key section of this bulletin for more details.

- Dealer user registration on www.supramapactivation.com.
- License key order placed and completed (1 – 3-day process).

Warranty Policy

If the need for additional repairs or adjustment is noted during PDS, the required service should be performed under warranty. Reimbursement will be managed under the warranty policy.

The Warranty Policy and Procedures Manual requires that you maintain the completed Check Sheet in the customer's file. If you cannot produce a completed form for each retailed vehicle upon TMS and/or Region/Distributor audit, the PDS payment amount will be subject to debit.

An additional Repair Order completed in conjunction with normal PDS MUST have time punch/flags for service. If multiple repairs are performed, separate time flags MUST be punched for each repair.

Warranty Information

OP CODE	DESCRIPTION	TIME	OFP	T1	T2
001013	Pre-Delivery Service (PDS)	1.5	–	–	–

© 2020 Toyota Motor Sales, USA

2021 Supra Pre-Delivery Service (PDS)

Required Tools & Equipment

SPECIAL SERVICE TOOLS (SST)	PART NUMBER	QTY
Supra Diagnostic Cable*	01018-00118	1
DCA-8000 Battery Diagnostic Tool*	DCA-8000P T	1

*Essential SST.

NOTE

Additional SSTs may be ordered by calling 1-800-933-8335.

REQUIRED EQUIPMENT	SUPPLIER	PART NUMBER	QTY
Techstream ADVi*	Snap-On	TSADVUNIT	1

*Essential SST.

NOTE

- Supra Diagnostic Software Toyota ISTA version 4.18.21.18585 or later is required. ISTA software is available for download at *TIS - Diagnostics – Scantool*.
- Techstream software version 15.30.027 or later is required.
- Additional Techstream ADVi units may be ordered through the Techstream Order Portal at *TIS – Diagnostics – Scantool*.

© 2020 Toyota Motor Sales, USA

2021 Supra Pre-Delivery Service (PDS)

Procedures

- Preparation for Map Activation 5
  - Dealer User Registration 5
  - Ordering License Key 5
- Transport Mode Deletion Procedure 6
- Spring Spacer Removal 24
- Tire Pressure Warning System (TPSW) Initialization 26
- Emergency Towing Eyelet Removal and Eyelet Hole Cover Installation* 27
- Front License Plate and Mounting Bracket Installation* 30
- Rear License Plate and Mounting Bracket Installation 33

*If applicable.

© 2020 Toyota Motor Sales, USA

2021 Supra Pre-Delivery Service (PDS)

Preparation for Map Activation

In order to perform navigation map activation (procedures for start-of-use) during the transport mode deletion procedure, it is necessary to order a license key in advance. It is necessary to determine the pre-delivery work schedule in coordination with the sales staff and perform the Dealer User Registration and Ordering License Key procedures described below.

Dealer User Registration

Navigate to www.supramapactivation.com and complete dealer user registration.

NOTE

User registration only needs to be completed once. If already registered, go to the Ordering License Key section of this bulletin. Refer to the Map Activation Order Request Guide for complete registration instructions.

Ordering License Key

Navigate to www.supramapactivation.com and order a license key.

NOTE

- Refer to the Map Activation Order Request Guide for complete ordering instructions.
- To place the order, enter the vehicle VIN and select the applicable country.
- Orders can be submitted 24 hours a day, but order processing times are limited. Therefore, orders need to be placed in advance according to the schedule for PDS.
- Time from order placed until order completed:
  From same day to max. 3 days (no processing on weekends).
- If an order is placed just before a scheduled order processing time, the order may be processed at the next scheduled order processing time.
- Order processing times (Central European Time):
  Monday – Friday, 9:45 AM, 12:00 PM, 3:00 PM, 9:00 PM.
- Orders are processed in Europe and will therefore follow European daylight savings (summer) time. The European daylight savings time schedule differs from the USA schedule.
- After the order has been received, an email will be sent to the address that was provided during user registration to inform you of the time at which processing is expected to be completed.
- As long as ISTA is connected to the internet, the ordered license key will automatically populate in ISTA during the navigation map activation procedure. (No physical object will be sent to the dealer.)
- Activation MUST be completed within 30 days of the license key order.
  If activation is NOT completed within 30 days of the license key order, the license key will become invalid, and it will be necessary to order a NEW license key.
- The 4-year free update period is calculated from the completion of the license key order, NOT from the activation timing.

© 2020 Toyota Motor Sales, USA

2021 Supra Pre-Delivery Service (PDS)

Transport Mode Deletion Procedure

Transport mode disables various electrical functions while the vehicle is being shipped to help prevent the vehicle battery from being drained. While in transport mode, the “Transport Mode Indicator” is displayed on the combination meter. The indicator will turn off after transport mode is deleted. Follow these steps to delete transport mode using the Supra diagnostic application (ISTA).

NOTE

- In the procedure below, the language setting in ISTA is British English (en-GB), which is the default setting. If you have changed the language setting to English for the United States (en-US), you may see different terminology within ISTA (e.g., Operations → Cases).
- Transport mode deletion procedure screen flows and content may vary depending on ISTA version.
- To perform the transport mode deletion procedure, it is necessary to connect to the Internet.

1. Connect the battery charger to the vehicle.

NOTE

- When deleting transport mode, keep the battery charger connected throughout the procedure and make sure the battery voltage remains at 12.3V or higher. If the voltage decreases below 12.3V, a message may be displayed on the ISTA screen instructing the technician to connect the battery charger.
- When AGM batteries are charging, the maximum charging voltage of 14.8V at room temperature must NOT be exceeded. Do NOT use rapid-charging programs.
- When charging, use the jump-starting terminals located under the hood.
- When the vehicle is stored for a long period of time, charge the battery to 12.9V every six weeks.

2. While connected to Wi-Fi, connect Techstream to the DLC3 port using the Supra diagnostic cable.

NOTE

Check that the date and time on the PC are correct.

3. Press the Start-Stop (engine switch) three times within 0.8 seconds to enter Diagnostics (PAD) Mode.

© 2020 Toyota Motor Sales, USA

2021 Supra Pre-Delivery Service (PDS)

Transport Mode Deletion Procedure (continued)

4. Launch ISTA software, enter the following menus: *Operations (Cases) – New – Read Out Vehicle Data*, and click Complete identification (Full Identification).

Figure 1.

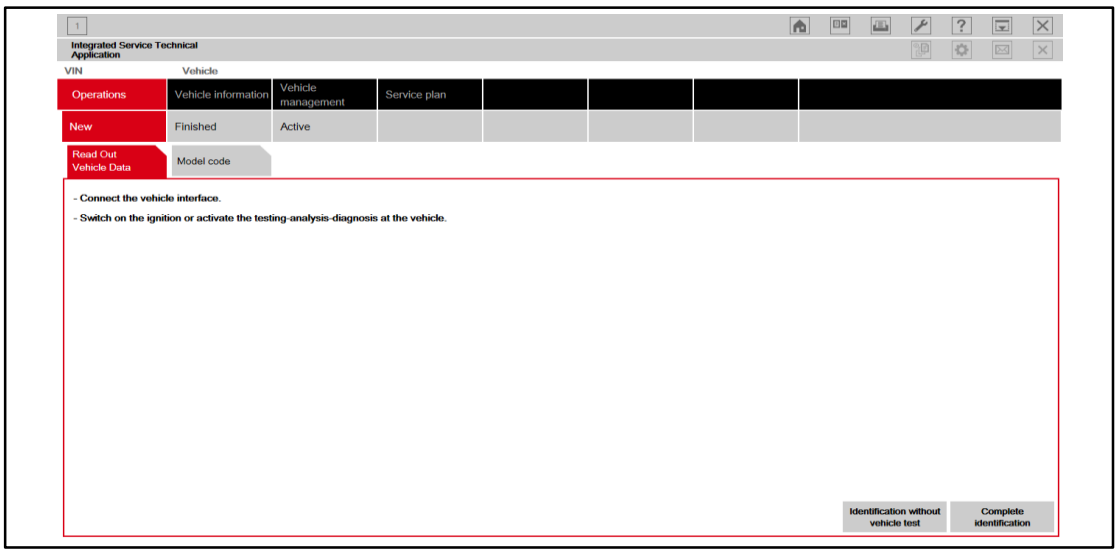

© 2020 Toyota Motor Sales, USA

2021 Supra Pre-Delivery Service (PDS)

Transport Mode Deletion Procedure (continued)

5. In the Connection manager window, select the VIN and click Set up connection (Establish connection).

Figure 2.

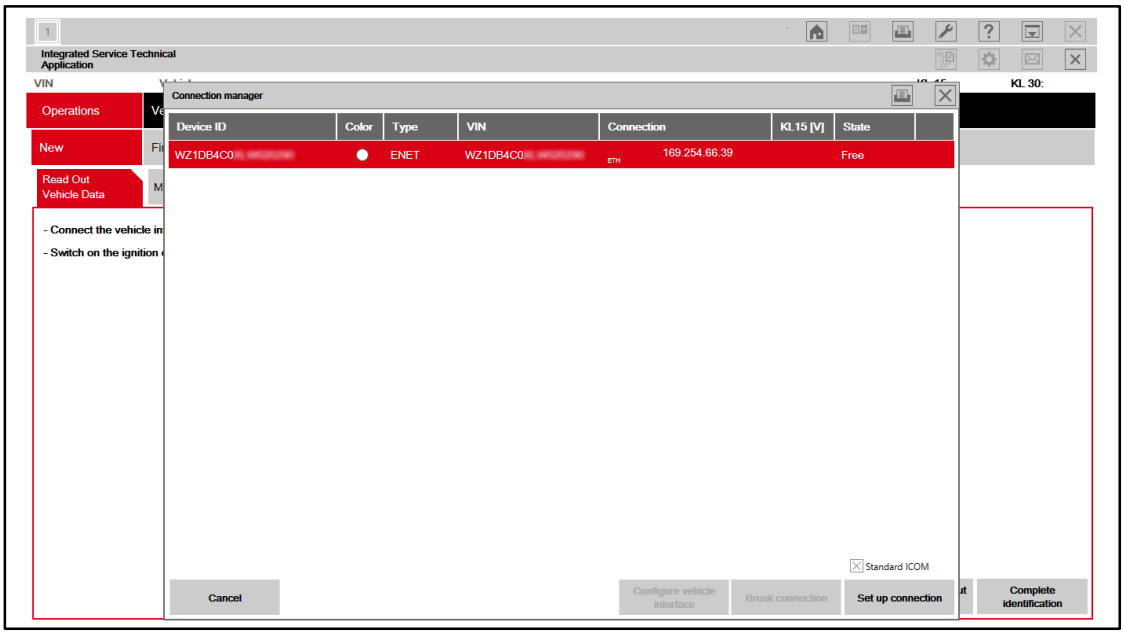

NOTE

AFTER the connection has been established, even if fault memory is displayed, it will be erased during "11. Delete Fault Memory," so it does NOT need to be handled at this point.

© 2020 Toyota Motor Sales, USA

2021 Supra Pre-Delivery Service (PDS)

Transport Mode Deletion Procedure (continued)

6. Enter the following menus:

   Vehicle management – Service functions – Maintenance and pre-delivery check – Transport mode, pre-delivery check – Delete transport mode – ABL Delete transport mode

   Then click Display.

Figure 3.

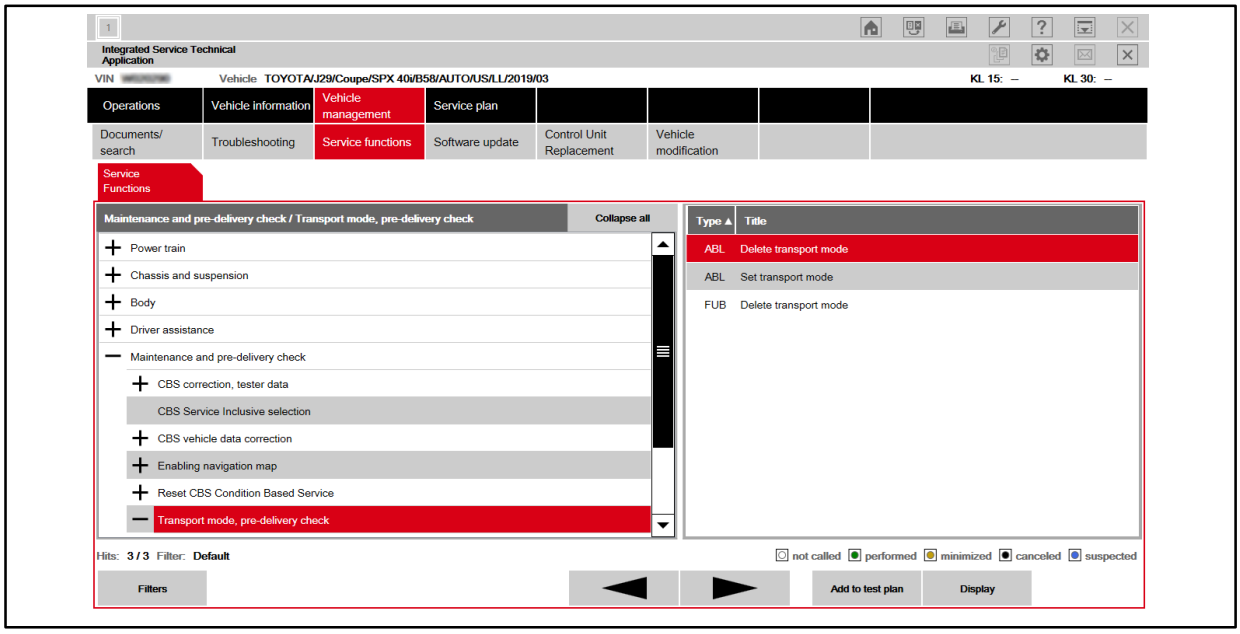

© 2020 Toyota Motor Sales, USA

2021 Supra Pre-Delivery Service (PDS)

Transport Mode Deletion Procedure (continued)

7. Menu display: “Delete transport mode and then carry out the pre-delivery check?”
   Select Yes, then click Continue.

Figure 4.

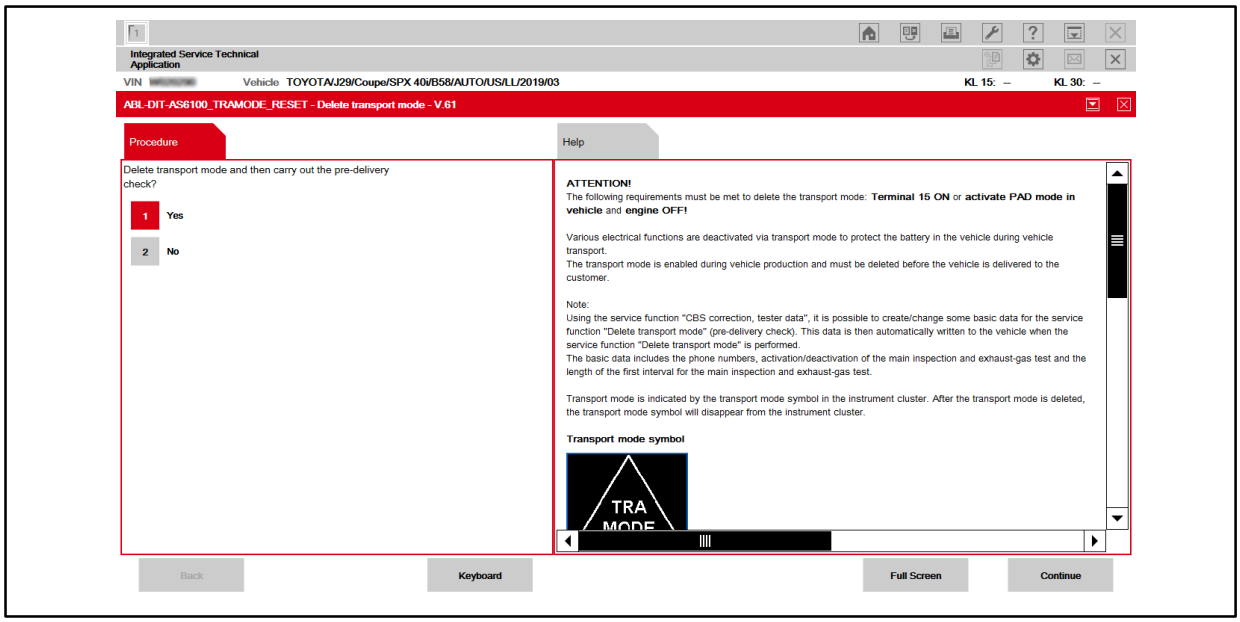

8. If the screen below appears, ignore it and click Continue.
   If this screen does NOT appear, continue to step 9.

Figure 5.

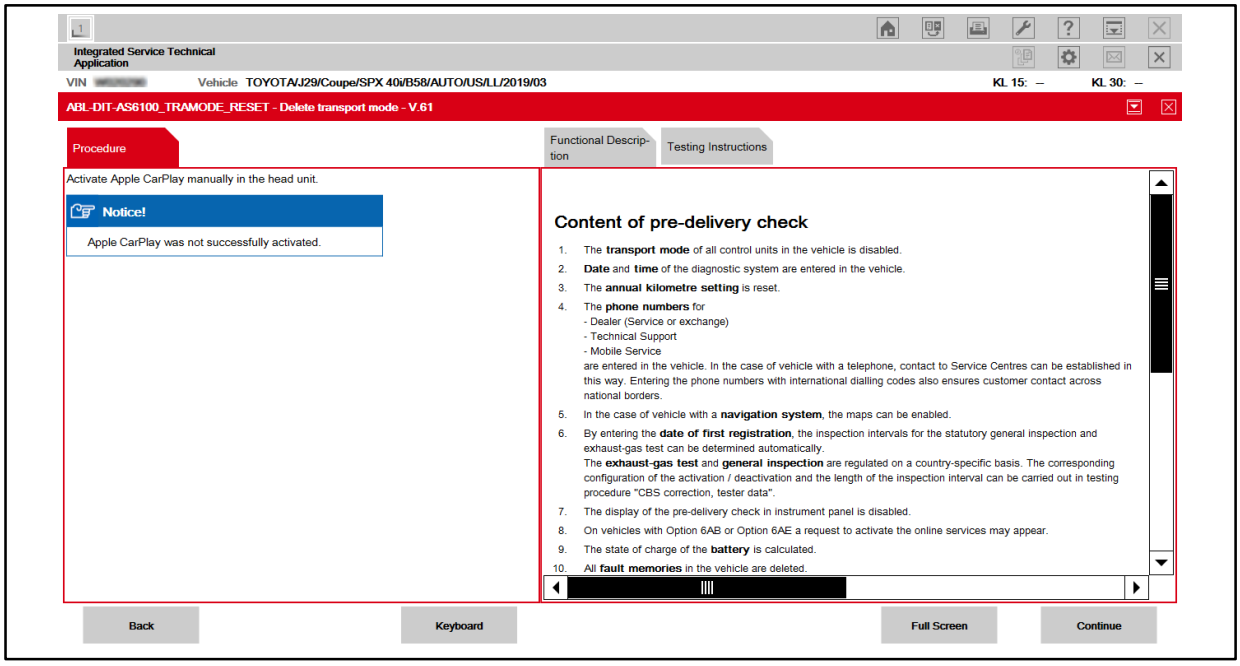

© 2020 Toyota Motor Sales, USA

2021 Supra Pre-Delivery Service (PDS)

Transport Mode Deletion Procedure (continued)

9. Menu display: “Enter the currently valid phone number for the responsible (country-specific) breakdown assistance.”

   Enter the appropriate roadside assistance phone number according to the table below, then click Continue.

> NOTE
> - Phone number entry is only required once. If the ISTA software being used has been used to complete PDS previously, go to step 12.
> - Do NOT input dashes with phone numbers.

REGION	ROADSIDE ASSISTANCE PHONE NUMBER
Continental United States of America	18003314331
Hawaii	18775251778
Puerto Rico	18009818166

Figure 6.

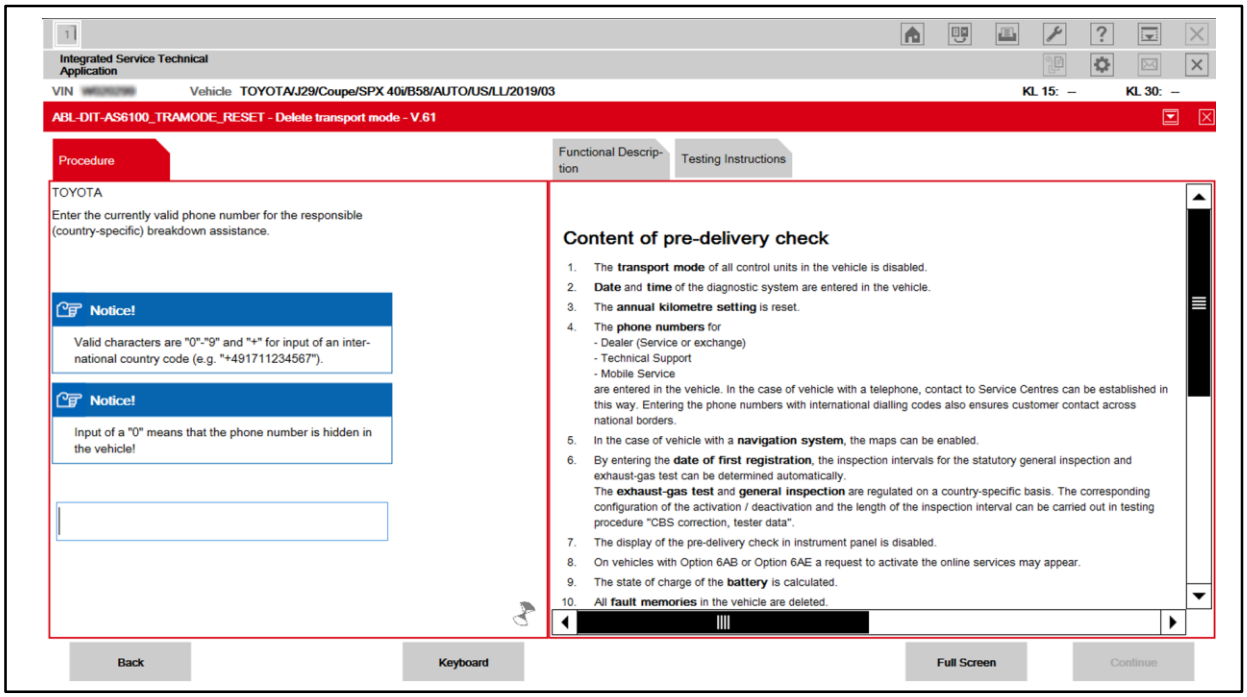

© 2020 Toyota Motor Sales, USA

2021 Supra Pre-Delivery Service (PDS)

Transport Mode Deletion Procedure (continued)

10. Menu display: “Enter the currently valid phone number for the responsible Technical Support department (country-specific).”

    Enter the appropriate customer support phone number according to the table below, then click Continue.

NOTE

- Phone number entry is only required once. If the ISTA software being used has been used to complete PDS previously, go to step 12.
- Do NOT input dashes with phone numbers.

REGION	CUSTOMER SUPPORT PHONE NUMBER
Continental United States of America	18003314331
Hawaii	18882725515
Puerto Rico	18778558377

Figure 7.

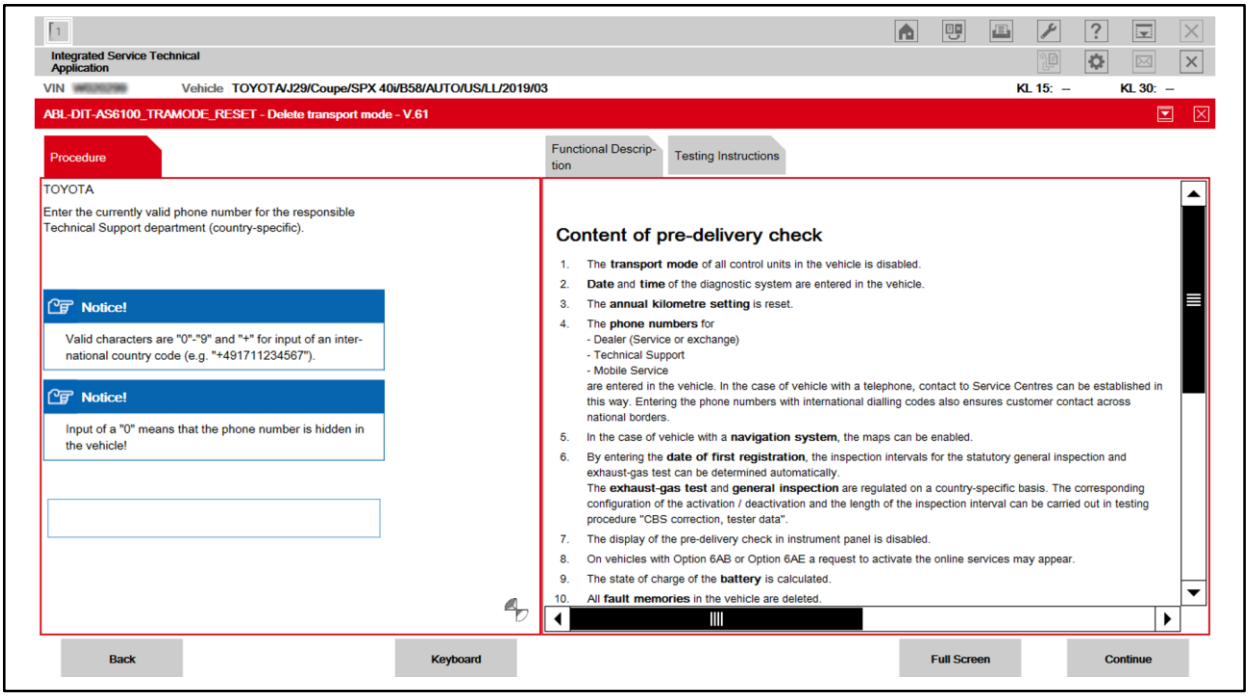

© 2020 Toyota Motor Sales, USA

2021 Supra Pre-Delivery Service (PDS)

Transport Mode Deletion Procedure (continued)

11. Menu display: “Enter the currently valid phone number for the dealer. If there are several telephone numbers in the premises, use the telephone number used in the service section.”

    Enter the service department phone number for your dealership, then click Continue.

> NOTE
>
> Phone number entry is only required once. If the ISTA software being used has been used to complete PDS previously, go to step 13.

Figure 8.

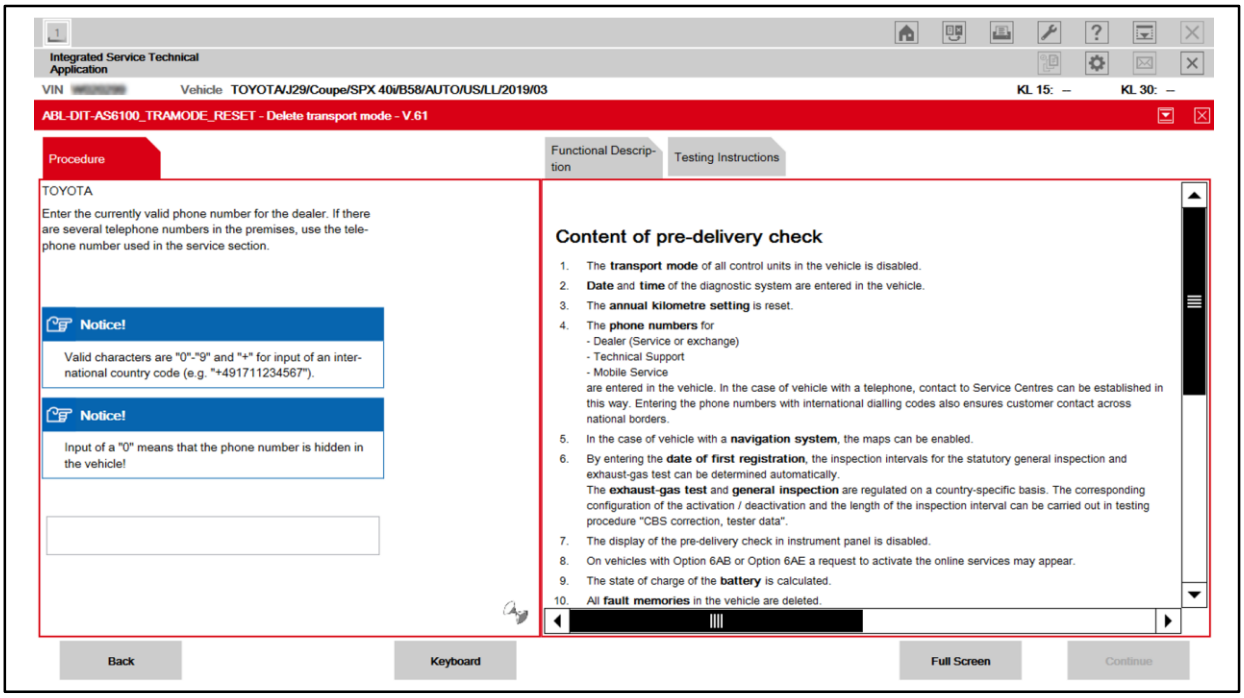

© 2020 Toyota Motor Sales, USA

2021 Supra Pre-Delivery Service (PDS)

Transport Mode Deletion Procedure (continued)

12. Ensure that statutory exhaust-gas test is deactivated, then click Continue.

    If statutory exhaust-gas test is activated, select Yes to deactivate, then click Continue.

> NOTE
>
> Statutory exhaust-gas test display preference entry is only required once. If the ISTA software being used has been used to complete PDS previously, continue to step 13.

Figure 9.

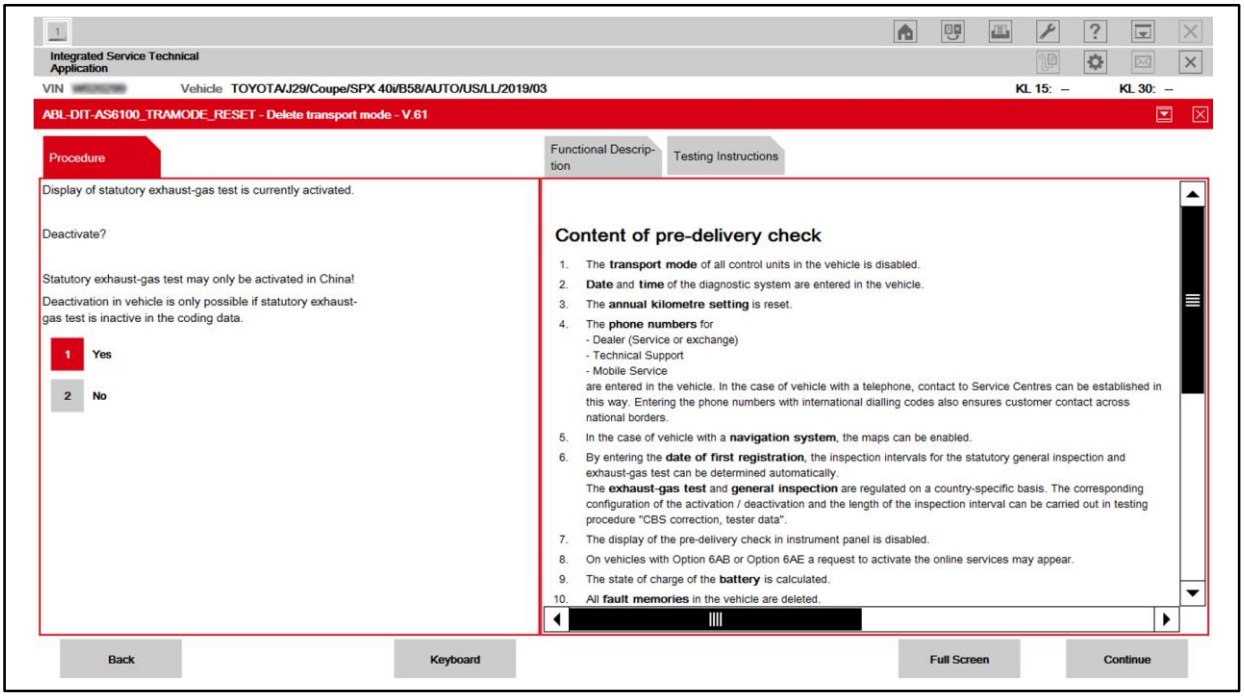

© 2020 Toyota Motor Sales, USA

2021 Supra Pre-Delivery Service (PDS)

Transport Mode Deletion Procedure (continued)

13. Confirm the phone numbers for breakdown assistance (roadside assistance), technical support (Customer Experience Center/customer support), and dealer (service department).

    Select the “Enter phone numbers in the vehicle” box and click Continue.

> NOTE
>
> If a phone number needs to be edited, select the box next to the number that needs to be edited and click Continue.

Figure 10.

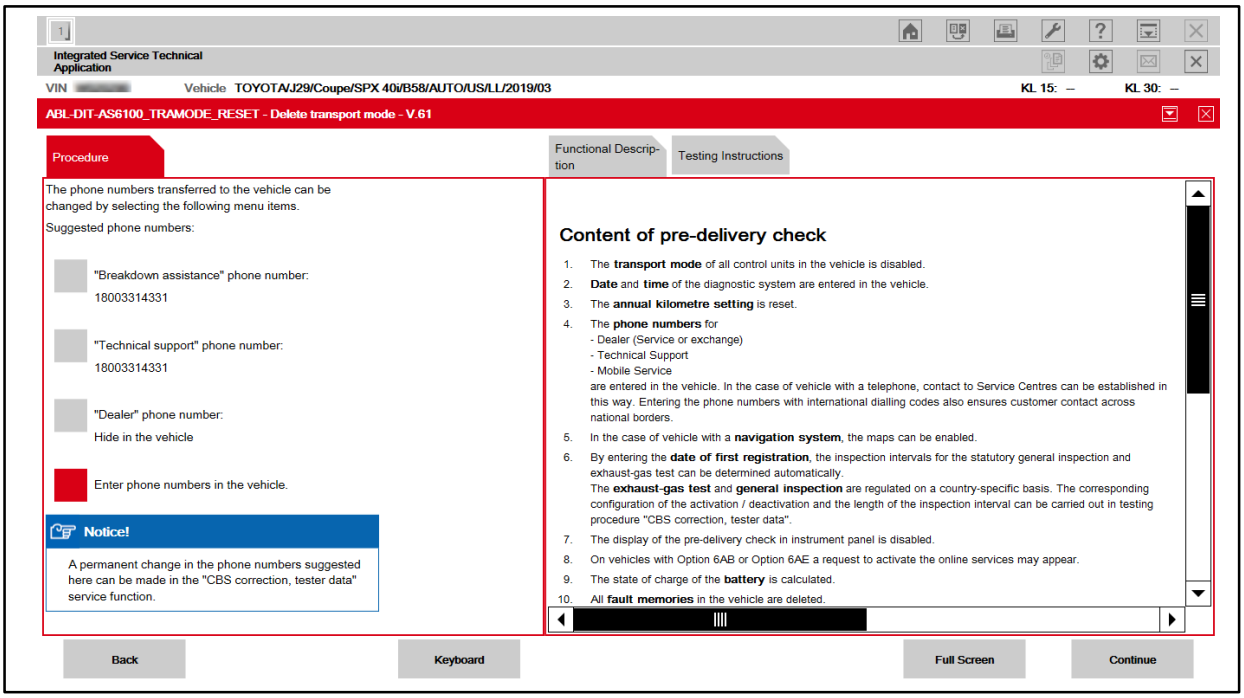

© 2020 Toyota Motor Sales, USA

2021 Supra Pre-Delivery Service (PDS)

Transport Mode Deletion Procedure (continued)

14. Menu display: “The online services will be updated in the following procedure...” Click Continue.

Figure 11.

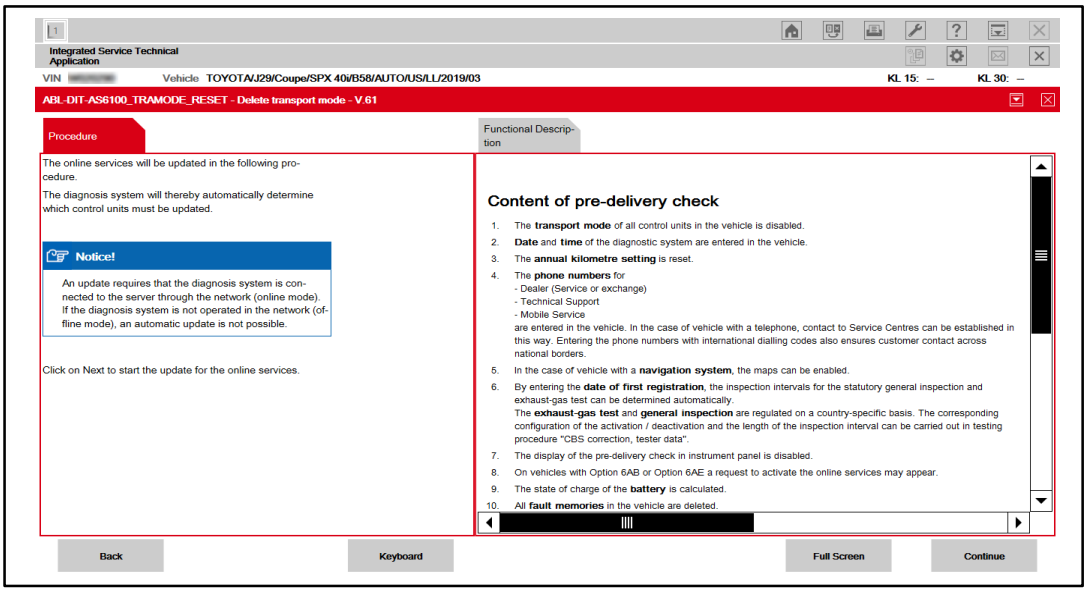

NOTE

- If updating online services fails, the menu will display “Currently, there is no connection to the ConnectedDrive Server or there is a problem with the user account in the ConnectedDrive portal."
- If this message is displayed, select “Confirm the note and continue with the procedure.” and “Continue (Next).”
- AFTER the transport mode deletion procedure is complete, use the multi-display and perform the following steps to update the online services.
  - After selecting “Connected Serv.,” press the OPTION button on the controller.
  - Select “Update Toyota Supra Services.”
  - For the “Transferring data” message, select “OK” and for the “Data transfer successful” message, select “OK.”

© 2020 Toyota Motor Sales, USA

2021 Supra Pre-Delivery Service (PDS)

Transport Mode Deletion Procedure (continued)

15. Once the head unit and telematics control unit service updates are complete, click Continue.

Figure 12.

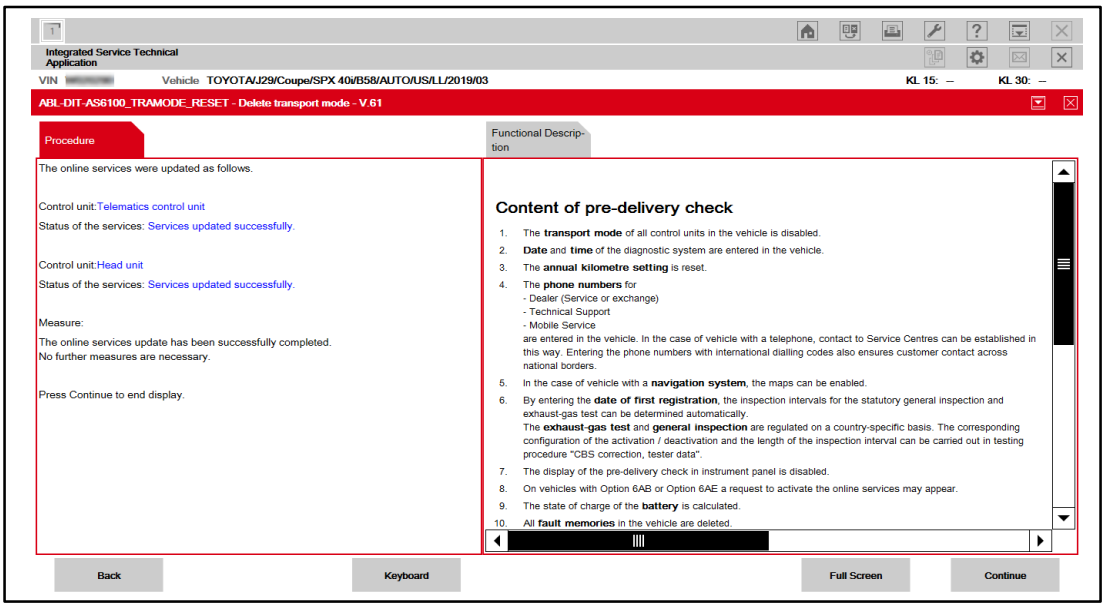

© 2020 Toyota Motor Sales, USA

2021 Supra Pre-Delivery Service (PDS)

Transport Mode Deletion Procedure (continued)

16. Maps should update automatically if the license key has been received.

    Once map activation is complete, click Continue.

NOTE

- Following successful map activation, maps will become available AFTER the vehicle has been powered OFF for AT LEAST 3 minutes. This can be done AFTER the completion of this entire procedure.
- If activating navigation maps fails, the menu display, "No activation code could be found in the database" will appear.
  - Select "DIAGCODE: D6590_SWT00000_99_###" and "Continue (Next)."
- For activation to be successful, the following conditions MUST be met:
  - License Key Order Status (Is the current date and time later than that listed in the received email?)
  - Network Connection (Is it possible to connect to https://ssl-fasta01.kitora.toyota.co.jp?)
- If the cause of the failure was resolved, select "Automatic enabling, not in offline operation" and "Continue (Next)."
- If the cause of failure could not be resolved, or if there is another issue, select "Continue without enabling" and "Continue (Next)."
- To complete map activation at a later time, use ISTA and enter the following menus: *Vehicle management – Service functions – Maintenance and pre-delivery check – Enabling navigation map – Automatic enabling – ABL Automatically enabling the navigation – Display*, and perform the navigation map activation.

Figure 13.

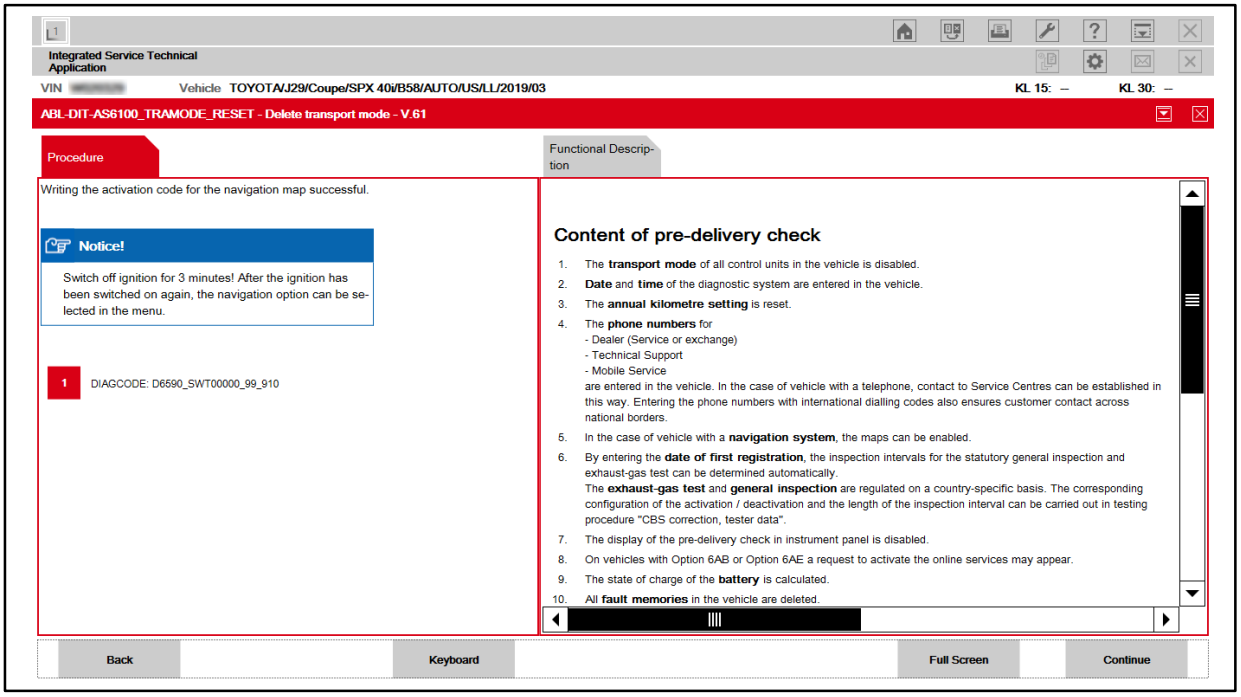

© 2020 Toyota Motor Sales, USA

2021 Supra Pre-Delivery Service (PDS)

Transport Mode Deletion Procedure (continued)

17. Menu display: “The steering angle sensor is not initialised!”

    Click Continue to initialize.

Figure 14.

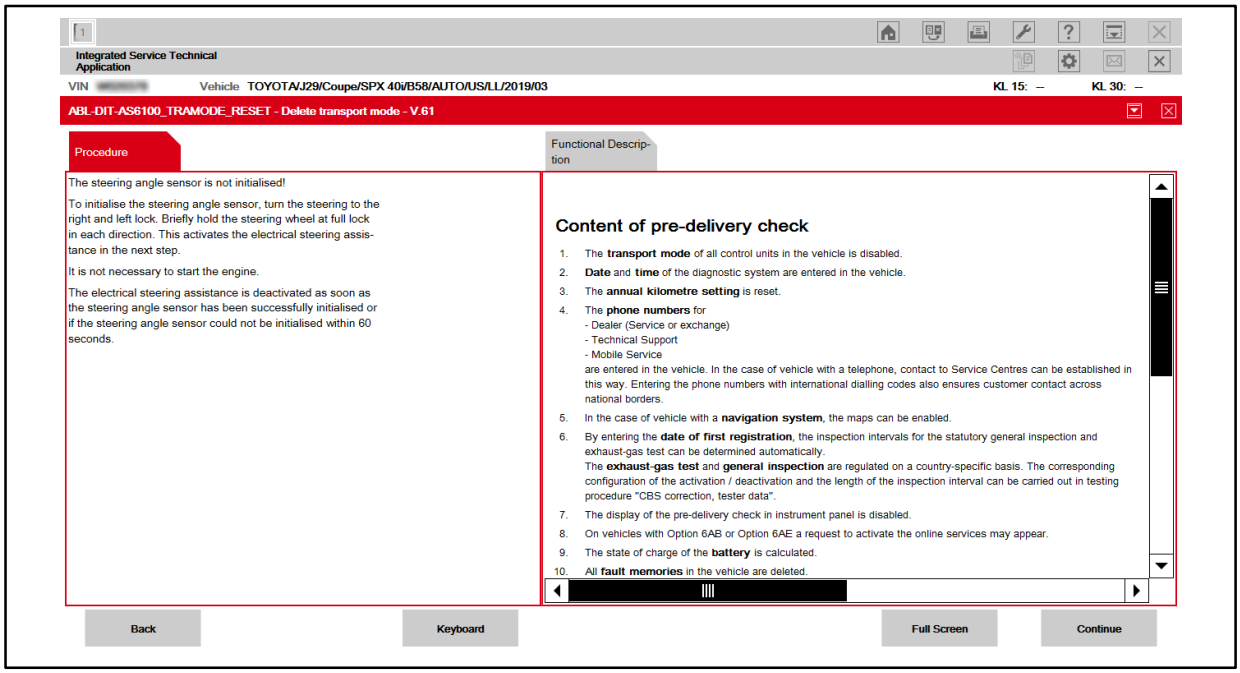

18. Menu display: “Electrical steering assistance is now activated.”

    Follow the directions on the screen, then click Continue once initialization is complete.

Figure 15.

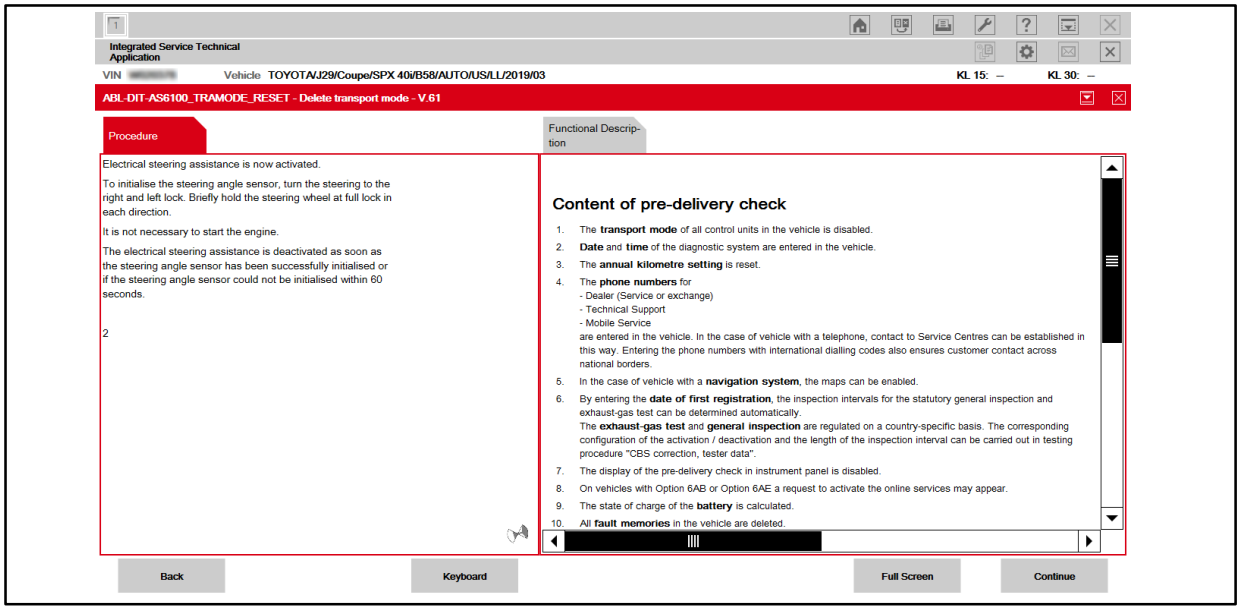

© 2020 Toyota Motor Sales, USA

2021 Supra Pre-Delivery Service (PDS)

Transport Mode Deletion Procedure (continued)

If the battery State-Of-Charge (SOC) is less than 70%, charge the battery with the DCA-8000 battery diagnostic tool using the Manual Charge option. The Transport Mode Deletion Procedure CANNOT be completed if the battery drops below 70% SOC.

Refer to the *DCA-8000 Instruction Manual* for complete battery charging procedures.

19. Menu display: “Charge status of 12V battery.”

    Click Continue.

NOTICE

- **Connect the battery diagnostic tool to the under-hood jump starting posts (do NOT connect directly to the battery).**
- **Do NOT charge at a voltage of more than 14.8V at room temperature (NO RAPID CHARGING).**

Figure 16.

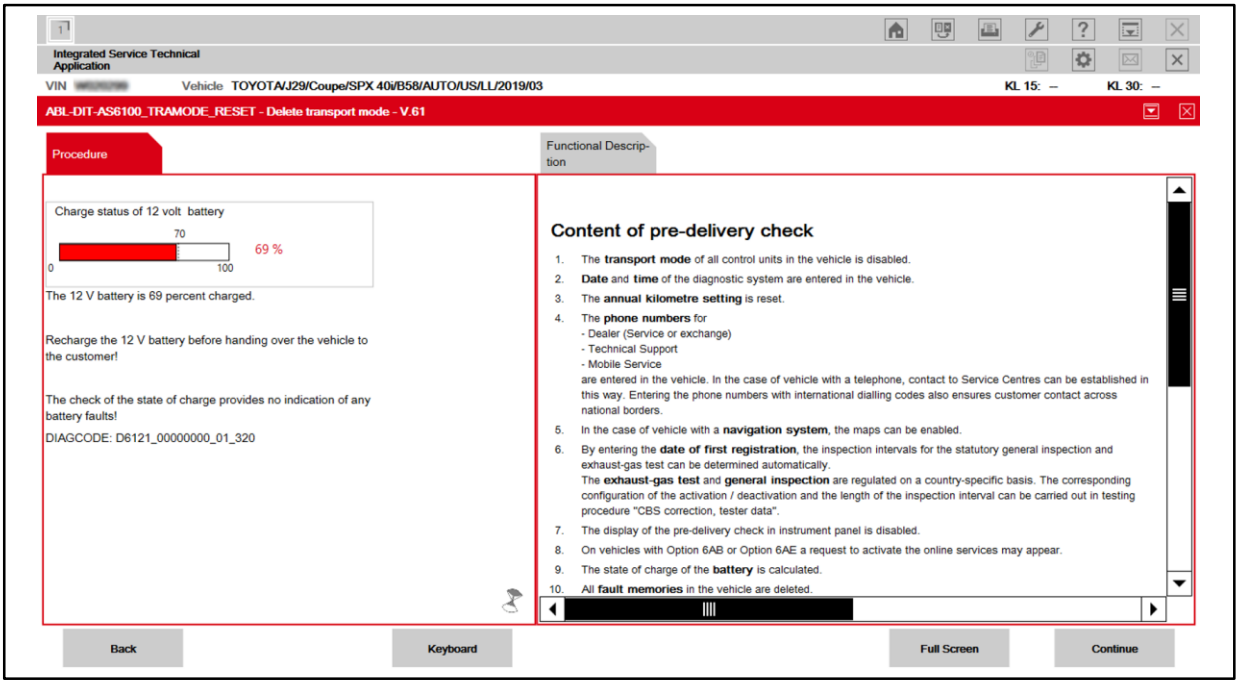

© 2020 Toyota Motor Sales, USA

2021 Supra Pre-Delivery Service (PDS)

Transport Mode Deletion Procedure (continued)

20. Fault memories should clear automatically. Once complete, review the pre-delivery check status list, then click Continue.

Figure 17.

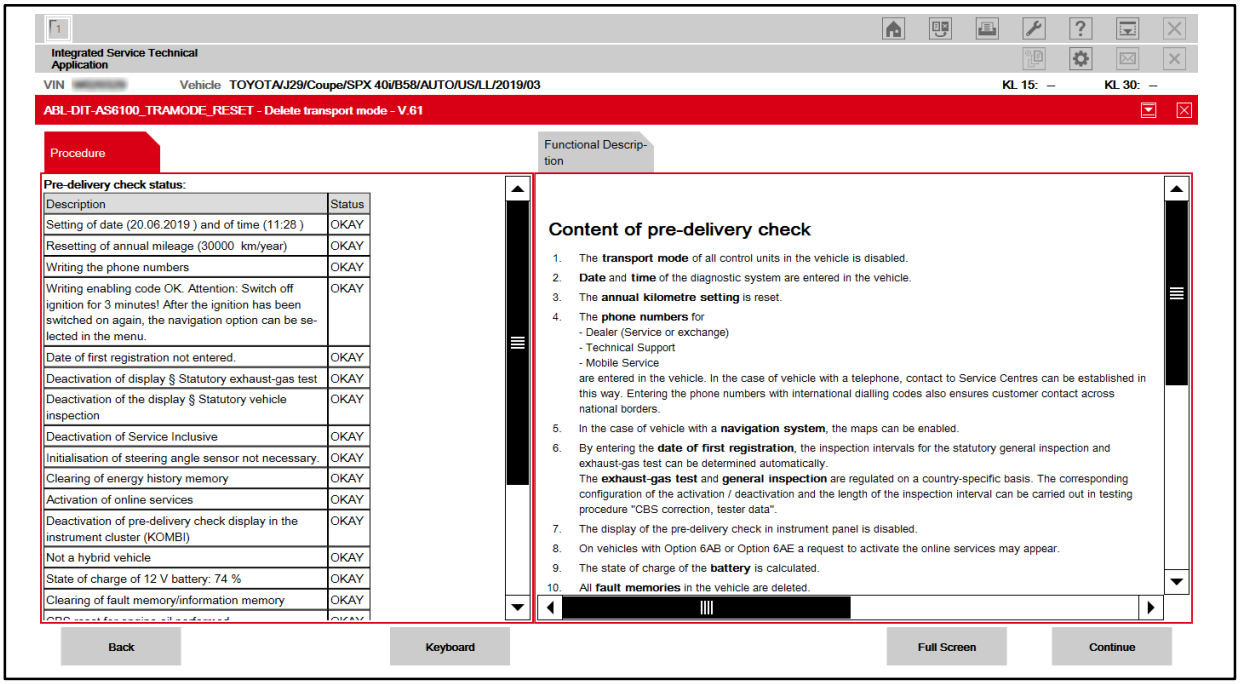

21. Menu display: “Service function finished.”

Click Continue.

Figure 18.

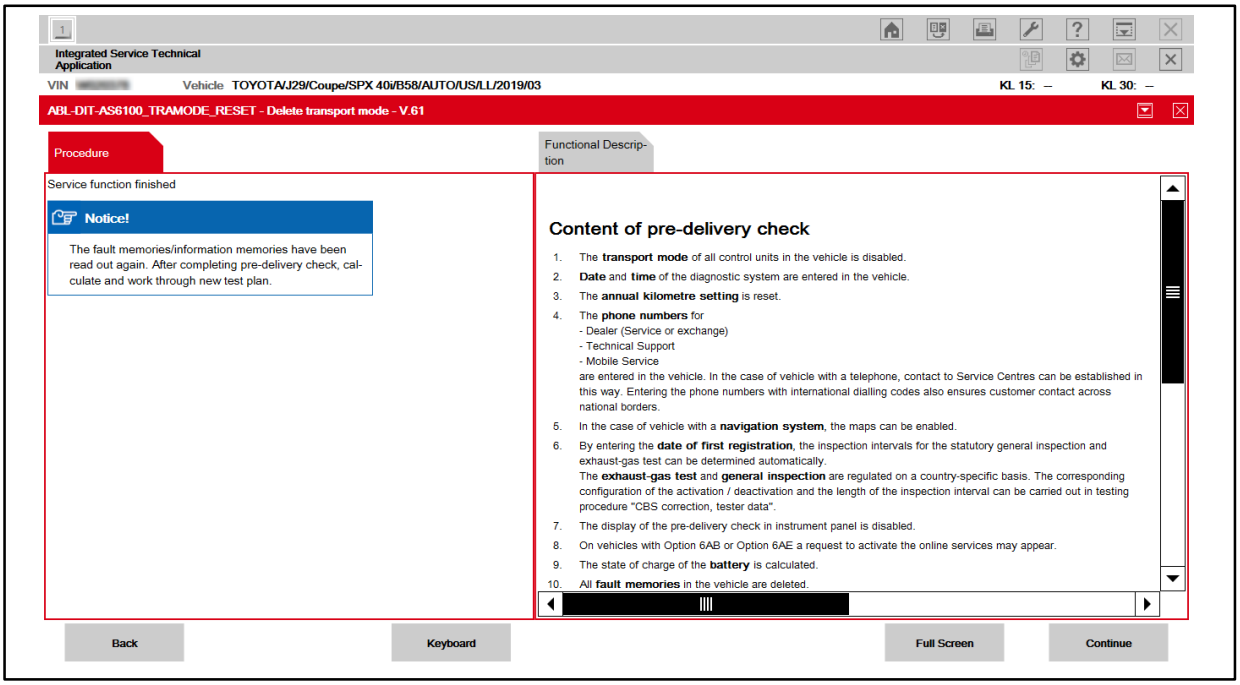

© 2020 Toyota Motor Sales, USA

2021 Supra Pre-Delivery Service (PDS)

Transport Mode Deletion Procedure (continued)

22. Transport mode deletion is complete.

    The Transport mode indicator in the combination meter should now be OFF.

23. Turn the vehicle OFF by pressing the Start-Stop engine switch once, then hold the power button on the head unit until the vehicle powers down.

24. To close the operation in ISTA, enter the following menus: *Operations – Active – Operation List*

    Select the VIN and click Close operation.

    Figure 19.

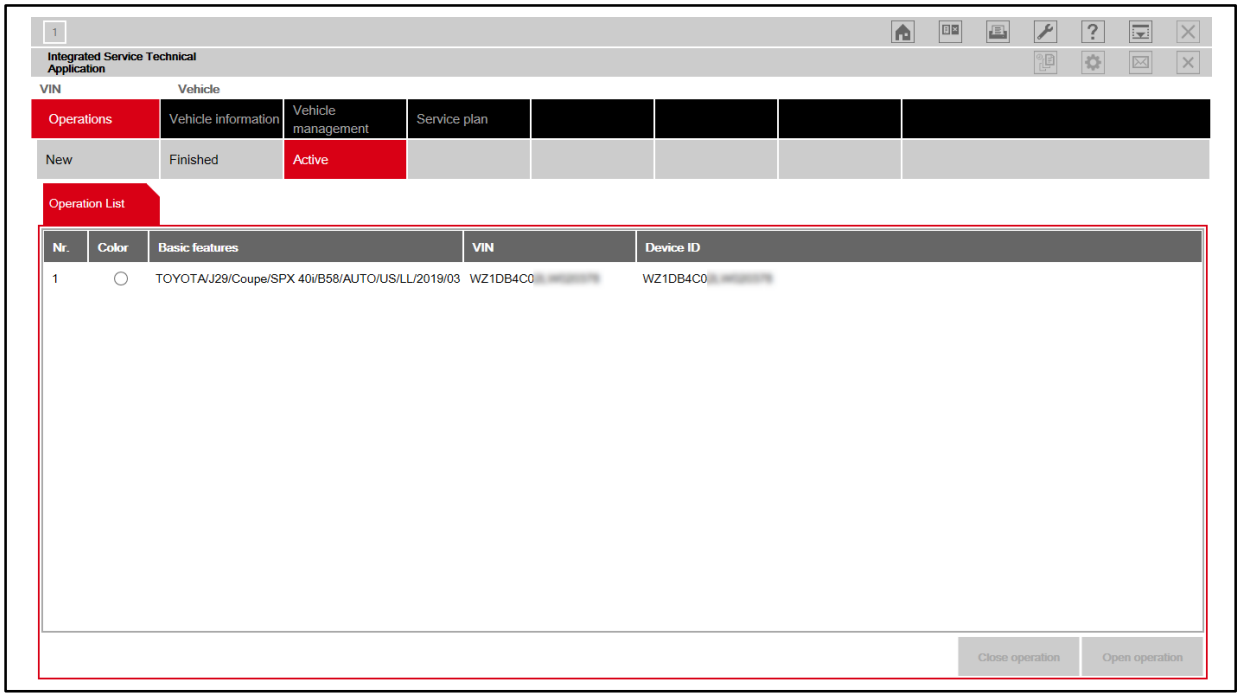

© 2020 Toyota Motor Sales, USA

2021 Supra Pre-Delivery Service (PDS)

Transport Mode Deletion Procedure (continued)

25. When the Close operation window appears, click OK.

Figure 20.

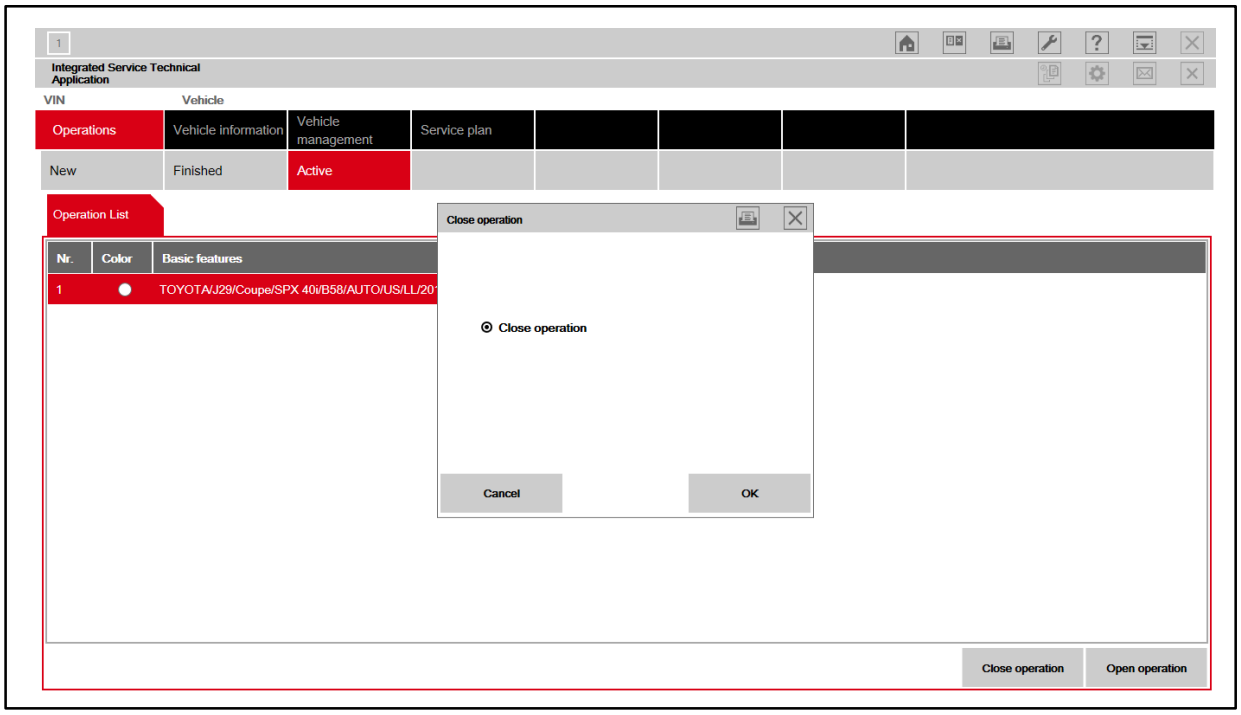

26. Disconnect the DLC3 connector from the vehicle and close ISTA.

© 2020 Toyota Motor Sales, USA

2021 Supra Pre-Delivery Service (PDS)

Spring Spacer Removal

Two spring spacers are installed on each front shock absorber to prevent the front bumper from being damaged in transit. Remove the four spring spacers during PDS.

Figure 21.

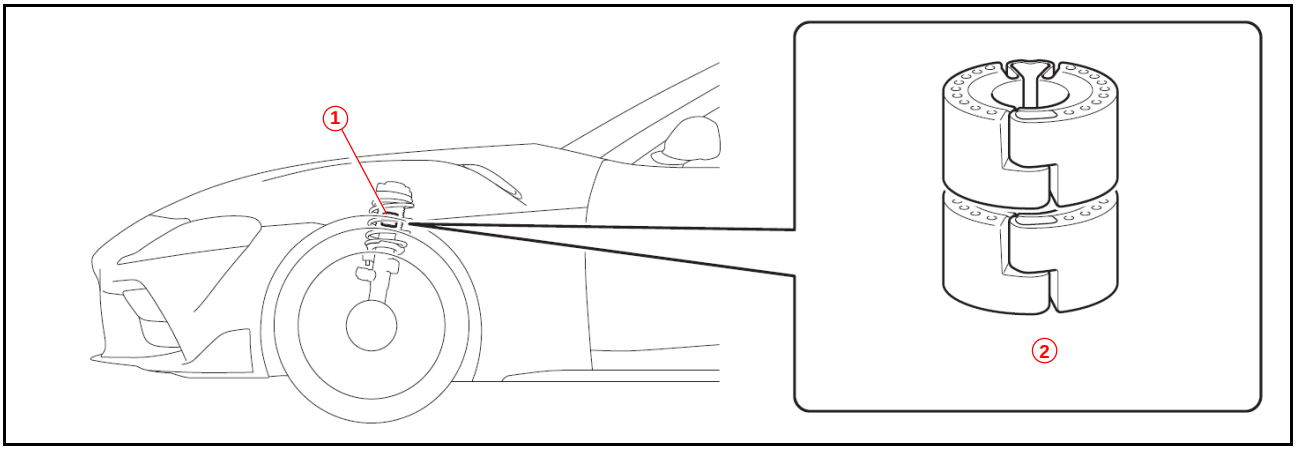

1	Spring Spacer Location
2	Spring Spacer (Two Per Side)

1. Lift the vehicle to extend the front suspension (see the Repair Manual).

2. Disengage the lower end of the dust cover and push the dust cover upward.

Figure 22.

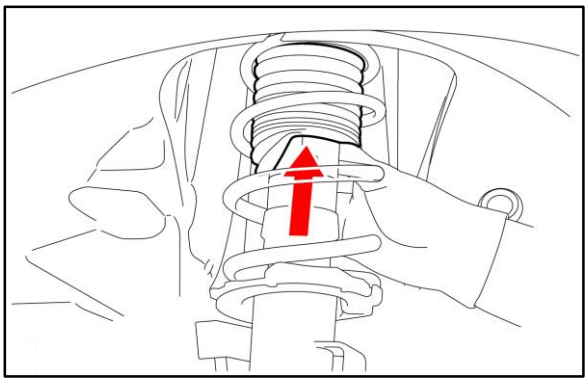

© 2020 Toyota Motor Sales, USA

2021 Supra Pre-Delivery Service (PDS)

Spring Spacer Removal (continued)

3. Disengage the spacers and spread the openings as shown.

Figure 23.

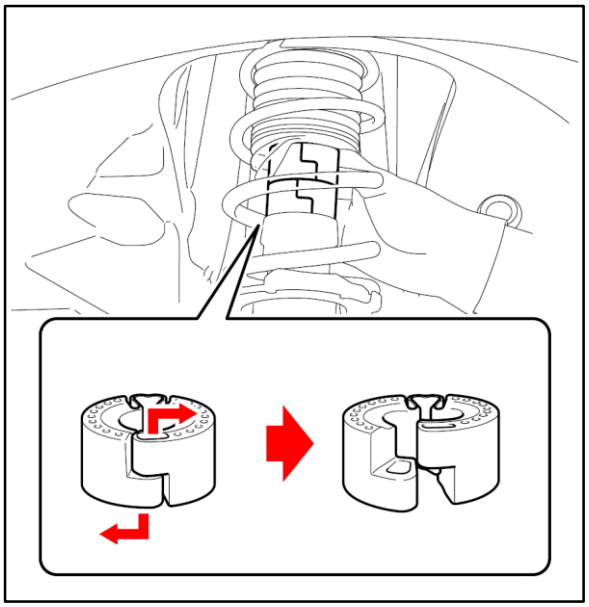

4. Remove both spacers from the shock absorber.

Figure 24.

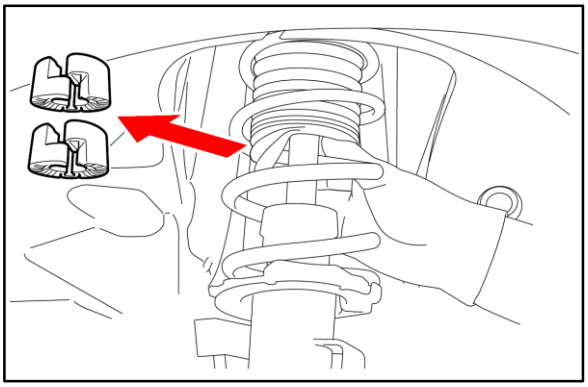

© 2020 Toyota Motor Sales, USA

2021 Supra Pre-Delivery Service (PDS)

Spring Spacer Removal (continued)

5. Pull the dust cover down and engage its lower end to the shock absorber.

Figure 25.

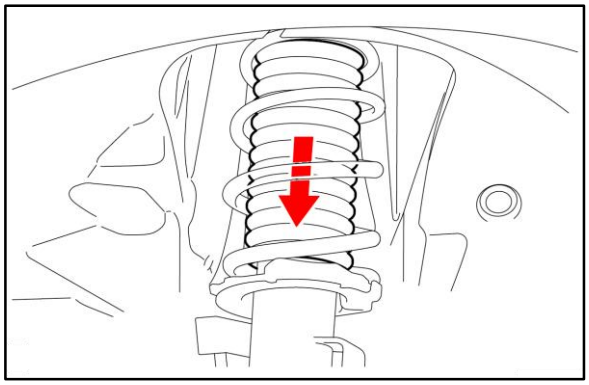

6. Repeat on the opposite side and lower the vehicle.

Tire Pressure Warning System (TPWS) Initialization

If ANY of the tire pressure values shown on the CID do NOT change correctly when adjusting tire pressure, initialize the TPWS.

Make sure that the tires are cold and set the tire inflation pressure to the specified values shown on the tire pressure information label on the driver's door pillar. Then, refer to the Repair Manual for the Initialization procedure.

© 2020 Toyota Motor Sales, USA

2021 Supra Pre-Delivery Service (PDS)

Emergency Towing Eyelet Removal and Eyelet Hole Cover Installation

If installed, follow the procedure below to remove the front AND rear emergency towing eyelets from the front and rear bumpers, then install the hole covers.

1. Remove the front AND rear emergency towing eyelets from the front and rear bumpers by turning them counterclockwise, using a steel bar for leverage if necessary.

Figure 26.

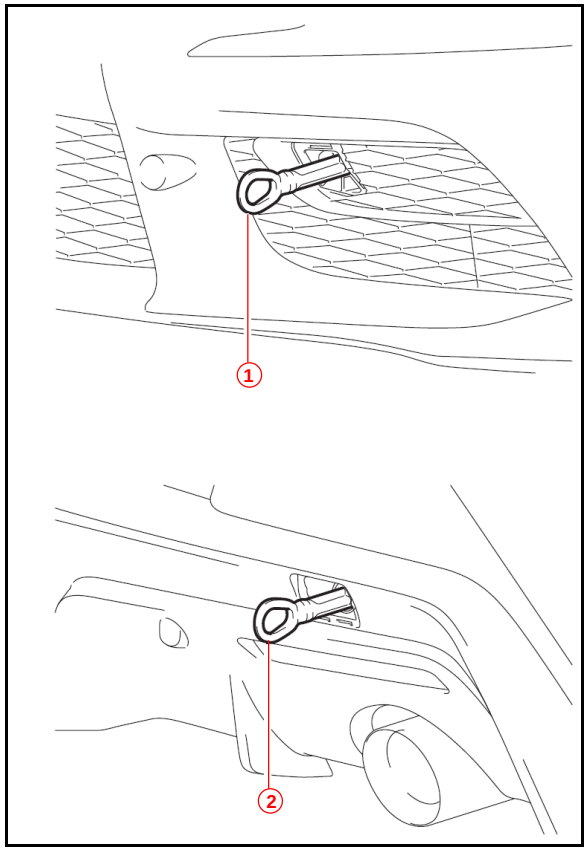

1	Front Emergency Towing Eyelet
2	Rear Emergency Towing Eyelet

© 2020 Toyota Motor Sales, USA

2021 Supra Pre-Delivery Service (PDS)

Emergency Towing Eyelet Removal and Eyelet Hole Cover Installation (continued)

2. Put the removed rear emergency towing eyelet into the toolbox in the luggage compartment and dispose of the front eyelet.

Figure 27.

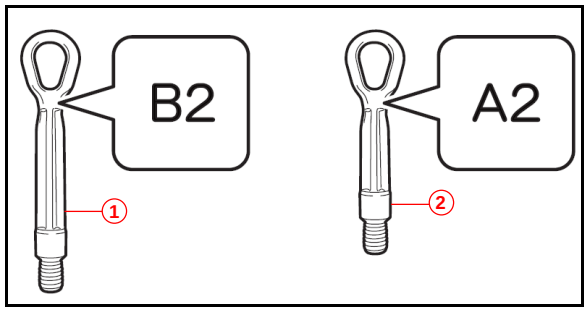

1	Front (Discard)
2	Rear (Store in Trunk)

Figure 28.

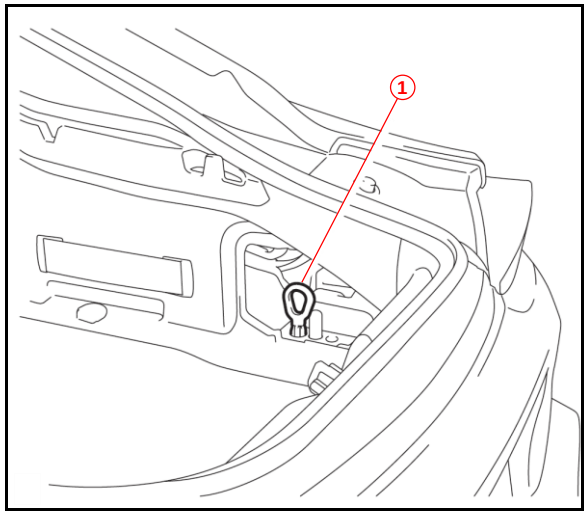

1	Emergency Towing Eyelet in Stowed Position

© 2020 Toyota Motor Sales, USA

2021 Supra Pre-Delivery Service (PDS)

Emergency Towing Eyelet Removal and Eyelet Hole Cover Installation (continued)

3. Take the front and rear emergency towing eyelet hole covers from the luggage compartment and install them to the bumpers, inserting the arrow-shaped parts through the holes.

Figure 29.

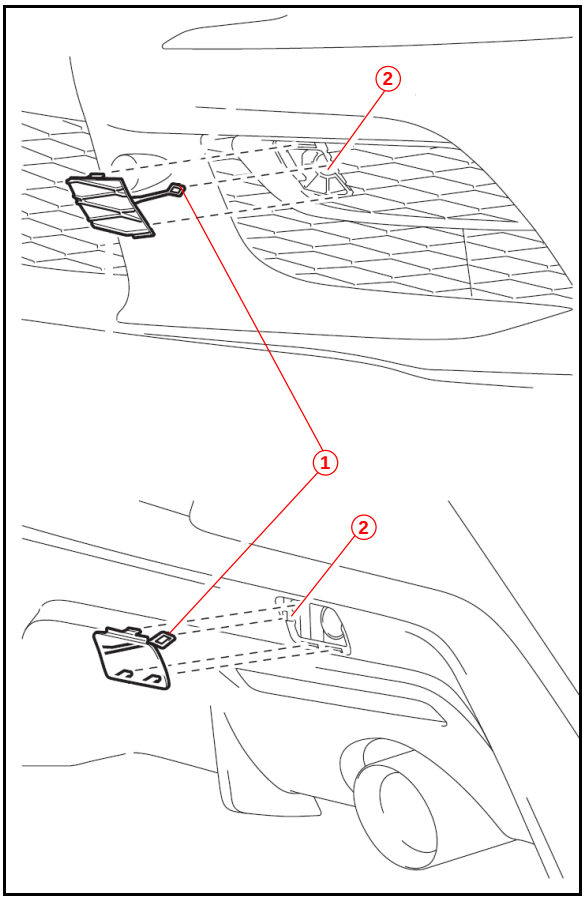

1	Arrow-shaped Part
2	Hole (Insert Arrow-shaped Part Here)

© 2020 Toyota Motor Sales, USA

2021 Supra Pre-Delivery Service (PDS)

Front License Plate and Mounting Bracket Installation

The front license plate mounting bracket and three self-tapping screws are loaded in the luggage compartment at the assembly plant. Install the front license plate and mounting bracket according to the procedure below when required by local regulation **AFTER receiving customer approval**.

1. Hang a plumb bob from the center of the front emblem and secure it with painter's tape to make a vertical center line.

Figure 30.

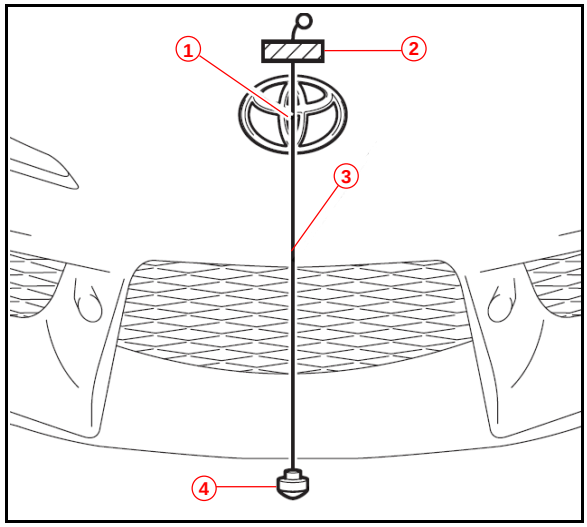

1	Center of Emblem
2	Painter's Tape
3	Center Line (String)
4	Plum Bob

2. Apply painter's tape to the top AND bottom of the face of the front license plate mounting bracket and mark the center line.

Figure 31.

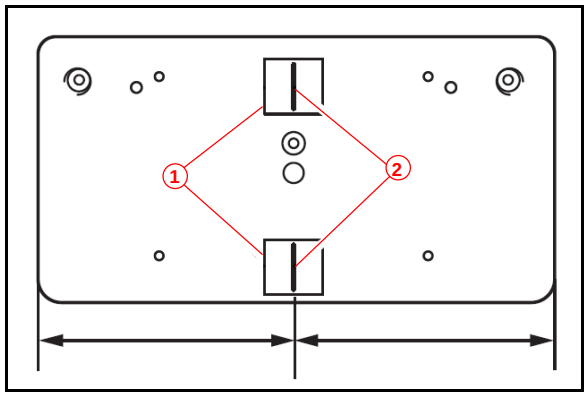

1	Painter's Tape
2	Center Line Mark

© 2020 Toyota Motor Sales, USA

2021 Supra Pre-Delivery Service (PDS)

Front License Plate and Mounting Bracket Installation (continued)

3. Apply a piece of painter's tape to the bumper with its bottom edge 15 mm (0.591 in.) below the body line.

Figure 32.

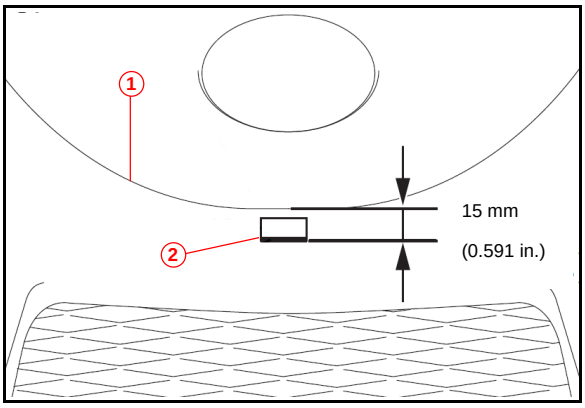

1	Bumper Body Line
2	Painter's Tape With Bottom Edge 15 mm Below Body Line

4. Align the top of the license plate mounting bracket with the bottom edge of the tape on the bumper. Then, bring the plumb bob string in front of the bracket and align the center lines on the license plate mounting bracket with the plumb bob string.

Figure 33.

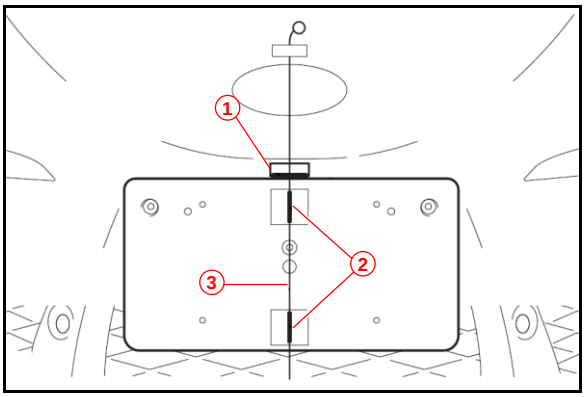

1	Top of Bracket Aligned With Bottom Edge of Tape
2	Bracket Center Line
3	Bumper Center Line

© 2020 Toyota Motor Sales, USA

2021 Supra Pre-Delivery Service (PDS)

Front License Plate and Mounting Bracket Installation (continued)

5. Install the front license plate mounting bracket to the front bumper using the three provided self-tapping screws.

NOTICE

- **Do NOT pre-drill holes into the bumper.**
- **Do NOT overtighten the self-tapping screws.**

Figure 34.

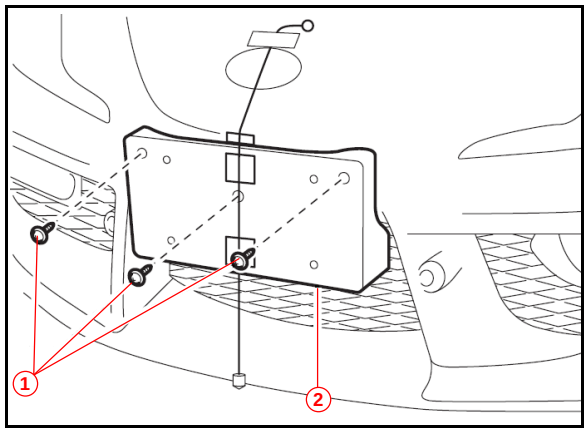

1	Self-tapping Screw (Provided)
2	Mounting Bracket

6. Install the front license plate to the mounting bracket using four 10 mm or shorter self-tapping screws (not provided).

NOTICE

Screws longer than 10 mm may contact and damage the bumper cover.

Figure 35.

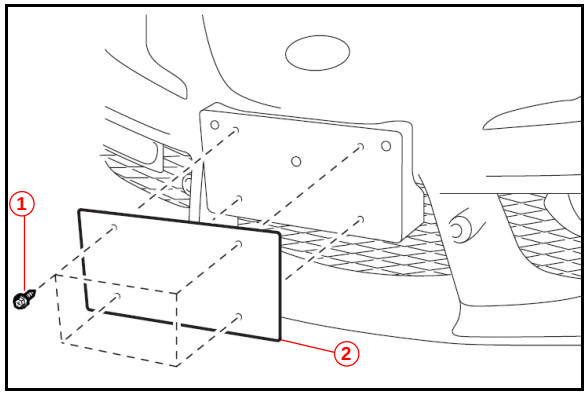

1	Self-tapping Screw (Not Provided)
2	License Plate

© 2020 Toyota Motor Sales, USA

2021 Supra Pre-Delivery Service (PDS)

Rear License Plate and Mounting Bracket Installation

The rear license plate mounting bracket, two long self-tapping screws, and four short screws are loaded in the luggage compartment at the assembly plant.

1. Align the holes on the rear license plate mounting bracket with the dimples on the rear bumper.

2. Install one provided self-tapping screw through the round hole on the rear license plate mounting bracket then install the other screw through the slotted hole.

NOTICE

- **Do NOT pre-drill holes into the bumper.**
- **Do NOT overtighten the self-tapping screws.**

Figure 36.

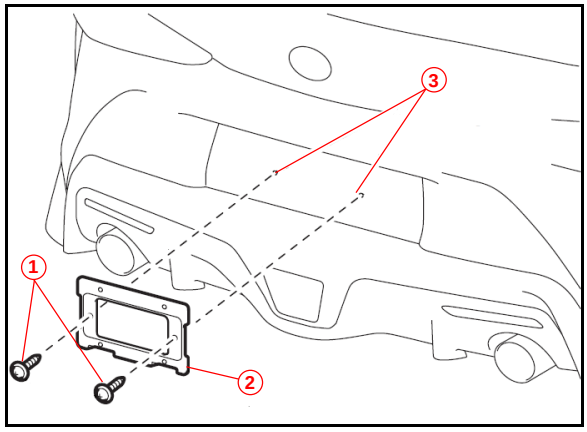

1	Self-tapping Screw (Provided)
2	Mounting Bracket
3	Dimple

3. Install the rear license plate to the mounting bracket using the four provided short screws.

Figure 37.

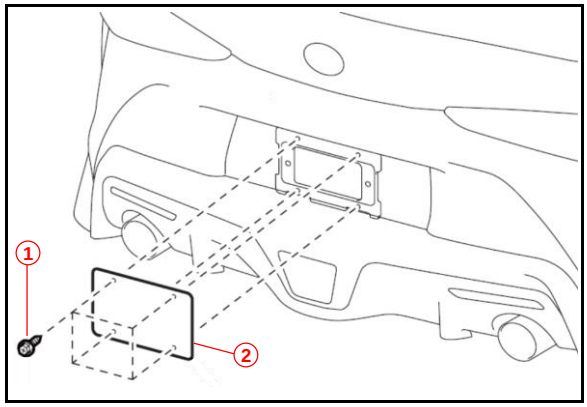

1	Short Screw (Provided)
2	License Plate

© 2020 Toyota Motor Sales, USA