TOYOTA MOTOR NORTH AMERICA | Quality

◀ IMPORTANT UPDATE ▶

The attached Dealer Letter has been updated. Refer to the details below.

DATE	TOPIC
October 5, 2020	A watermark has been added to the Technical Instructions to indicate that Limited Service Campaign expired on October 5, 2020.

Please review this notification with your staff to assure that all relevant personnel have been briefed regarding this subject.

Thank you for your cooperation.

© 2020 Toyota Motor Sales, USA

TECHNICAL INSTRUCTIONS

FOR

LIMITED SERVICE CAMPAIGN H0L

PARKING BRAKE COVER INSTALLATION

CERTAIN 2018 C-HR

H0L Expired on October 5, 2020

The repair quality of covered vehicles is extremely important to Toyota. All dealership Maintenance technicians performing this repair are required to successfully complete the most current version of the E-Learning course “Safety Recall and Service Campaign Essentials”. To ensure that all vehicles have the repair performed correctly; technicians performing this repair are required to currently hold at least one of the following certification levels:

- Maintenance Technician
- Certified Technician (Any specialty)
- Expert Technician (Any specialty)
- Master Technician
- Master Diagnostic Technician

Always check which technicians can perform the recall remedy by logging on to https://www.uotdealerreports.com. It is the dealership’s responsibility to select technicians with the above certification level or greater to perform this repair. Carefully review your resources, the technician skill level, and ability before assigning technicians to this repair. It is important to consider technician days off and vacation schedules to ensure there are properly trained technicians available to perform this repair at all times.

I. OPERATION FLOW CHART

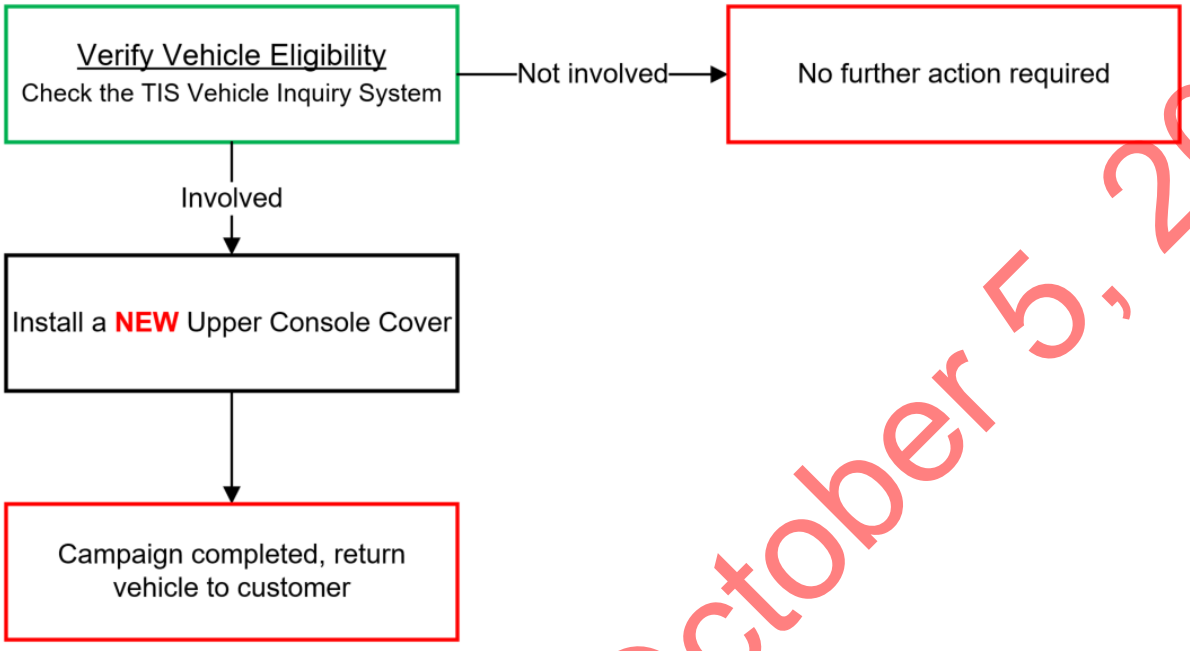

II. IDENTIFICATION OF AFFECTED VEHICLES

- Check the TIS Vehicle Inquiry System to confirm the VIN is involved in this Customer Satisfaction Campaign, and that the Campaign has not already been competed prior to dealer shipment or by another dealer.
- TMS warranty will not reimburse dealers for repairs completed on vehicles that are not affected or were completed by another dealer.

HOL Expired on October 5, 2020

III. PREPARATION

A. PARTS

Part Number	Part Description	Quantity
04007-37110	COVER KIT, CONSOLE, UPR	1

B. Tools and Equipment

- Vernier Caliper
- 0.7mm Spacer (see Section VII: Step 1 for instruction on how to create spacer)

C. Materials

- Interior Safe Parts Cleaner

IV. BACKGROUND

Momentary activation of the electronic parking brake (EPB) can occur in limited circumstances if the driver moves the shift lever from the drive position into the manual downshift position when a rigid object of a specific size is placed in the EPB switch finger well. Momentary activation while driving will result in the vehicle slowing slightly, warning lights appearing on the instrument panel, a "PKB Applied" display message, and audible buzzing.

V. WORK PROCEDURE TABLE OF CONTENTS

COMPONENTS ..... **SECTION VI**
INSTALL PARKING BRAKE COVER ..... **SECTION VII**
APPENDIX ..... **SECTION VIII**

HOL Expired on October 5, 2020

VI. COMPONENTS

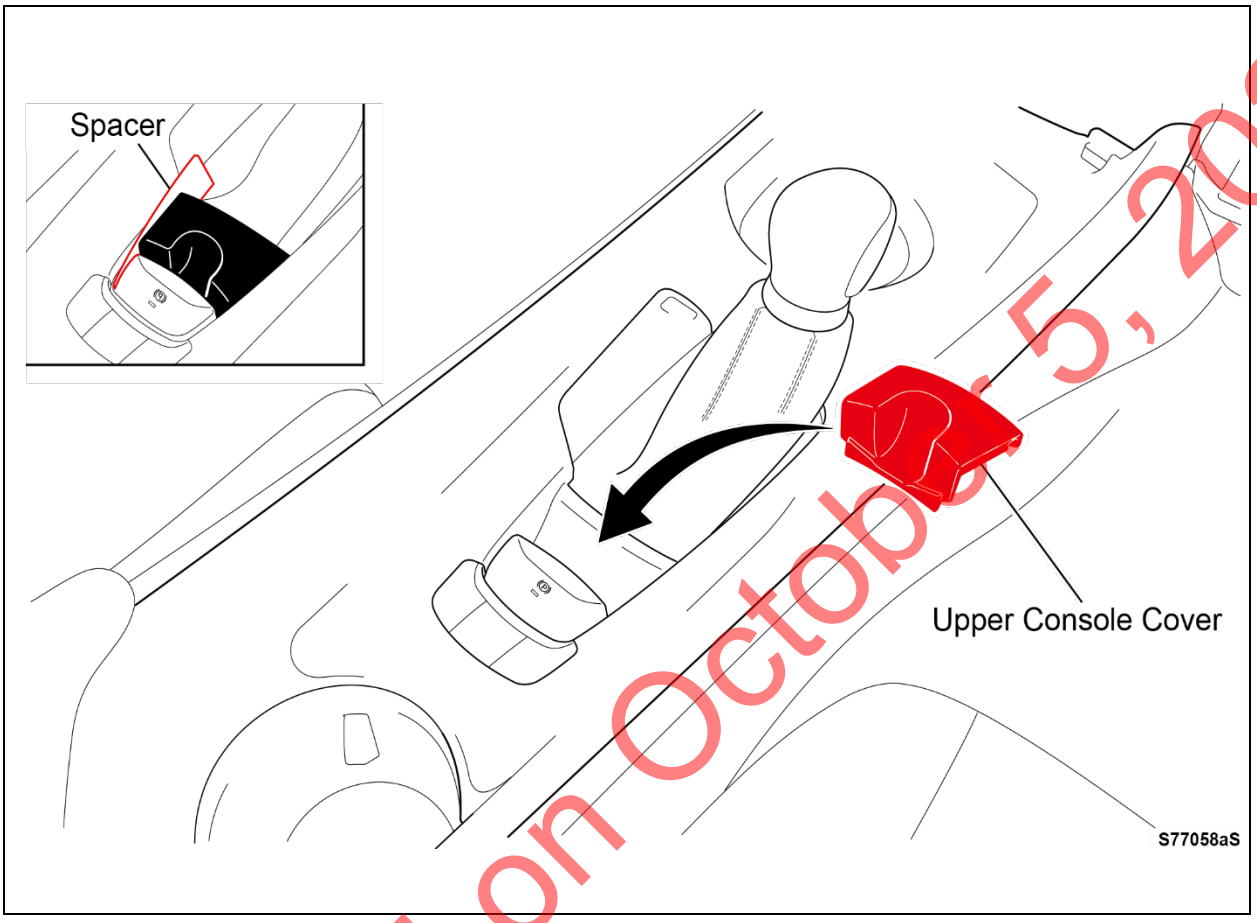

HOL Expired on October 5, 2020

VII. INSTALL UPPER CONSOLE COVER

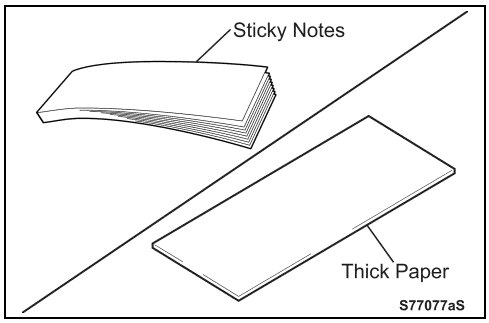

1. CREATE SPACER TOOL

a. Prepare sticky notes or a thick piece of paper such as a business card.

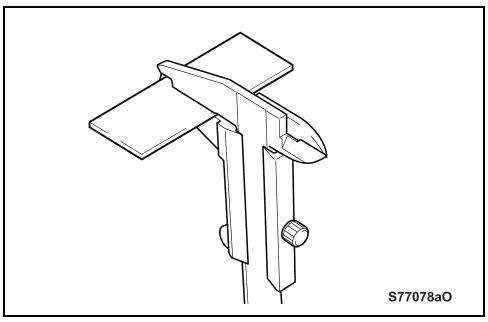

b. Using a Vernier caliper, measure the thickness of the paper to ensure it meets the specification below.

Specification: Approx: 0.7mm (0.027in.)

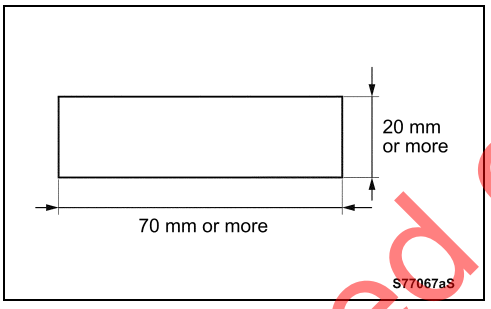

c. Cut the paper to the size shown in the illustration

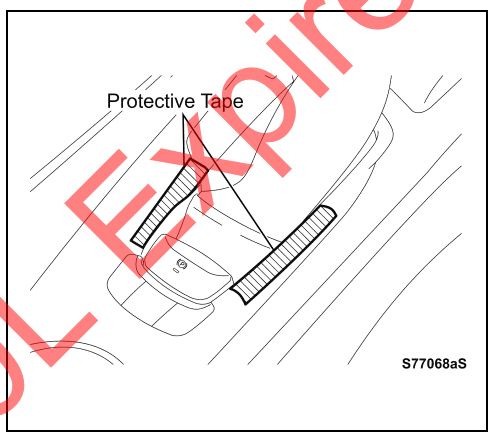

2. PREPARE THE SURFACE AREA PRIOR TO INSTALLATION

a. Apply masking tape to the areas show in the illustration to the right.

HOL Expired on October 5, 2020

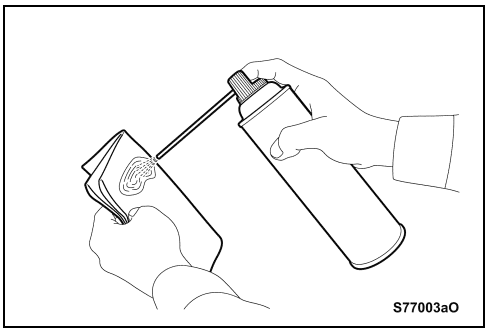

b. Spray parts cleaner on a clean cloth outside the vehicle

STOP ***DO NOT* spray the cleaner inside the cabin. Always spray it outside to prevent it from being sprayed on the vehicle interior components.**

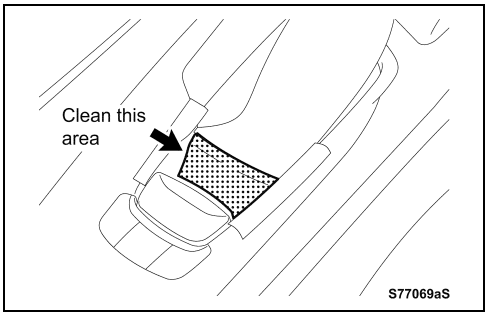

c. Using the cloth that has been sprayed with parts cleaner, clean and degrease the upper surface of the upper console panel shown in the illustration.

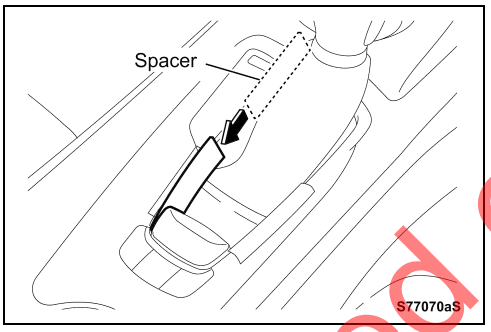

3. INSTALL THE PARKING BRAKE COVER

a. Insert the spacer into the left-side gap between the electric parking brake switch and the upper console panel.

HOL Expired on October 5, 2020

Be sure to use the spacer to ensure the gap is even on the right and left sides

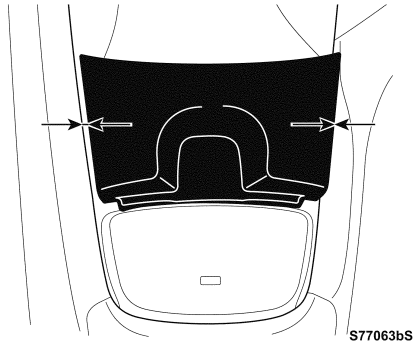

STOP

- **Be sure to use the spacer or the right and left side gaps between the parking brake cover and panel may become significantly uneven.**
- **Once permanently installed using double-sided tape, *DO NOT* reuse the parking brake cover, as it may accidentally detach due to reduced adhesive strength. Be sure to replace it with a *NEW* one.**

Upper console cover inner surface

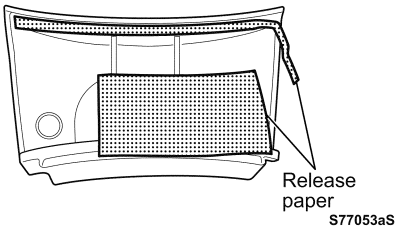

b. Remove the release paper from the double-sided tape on the ***NEW*** parking brake cover.

STOP

WHEN AMBIENT AIR TEMPERATURE IS 15°C (59°F) OR BELOW:
Slightly heat the tape on the parking brake cover and the mating surfaces of the upper console panel. The adhesive strength decreases when the temperature is 15°C (59°F) or below.

HOL Expired on October 5, 2020

c. Position the ***NEW*** parking brake cover in the space under the electric parking brake switch.

STOP

- **DO NOT attach any part of the parking brake cover at this stage.**
- **Be sure to first insert the parking brake cover as shown, or it will interfere with the parking brake switch.**

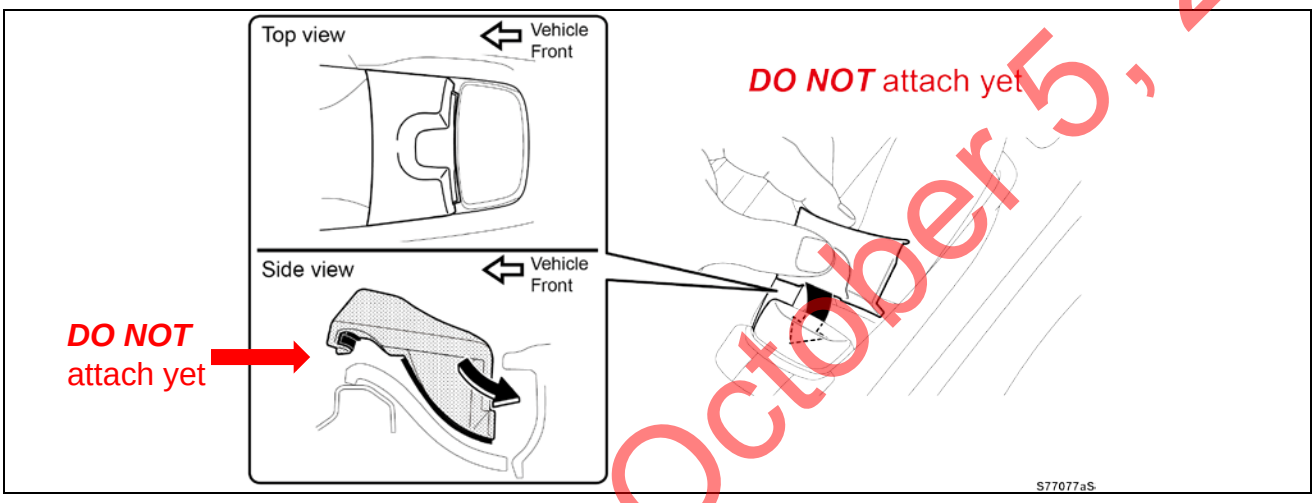

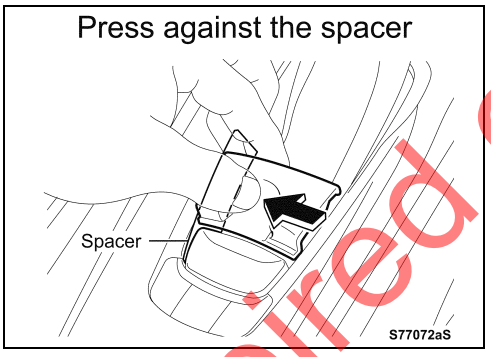

d. Press the parking brake cover against the spacer

HOL Expired on October 5, 2020

e. While holding the parking brake cover against the spacer, gently press the front end against the panel as shown. Keep the rear portion lifted off the upper console panel.

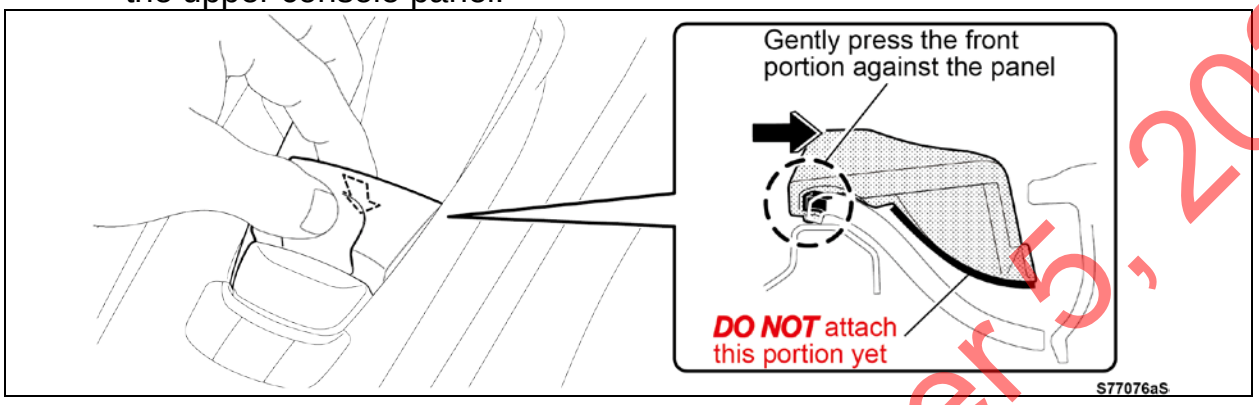

STOP **DO NOT attach the rear portion of the parking brake cover before the front portion, or the parking brake cover cannot be installed correctly.**

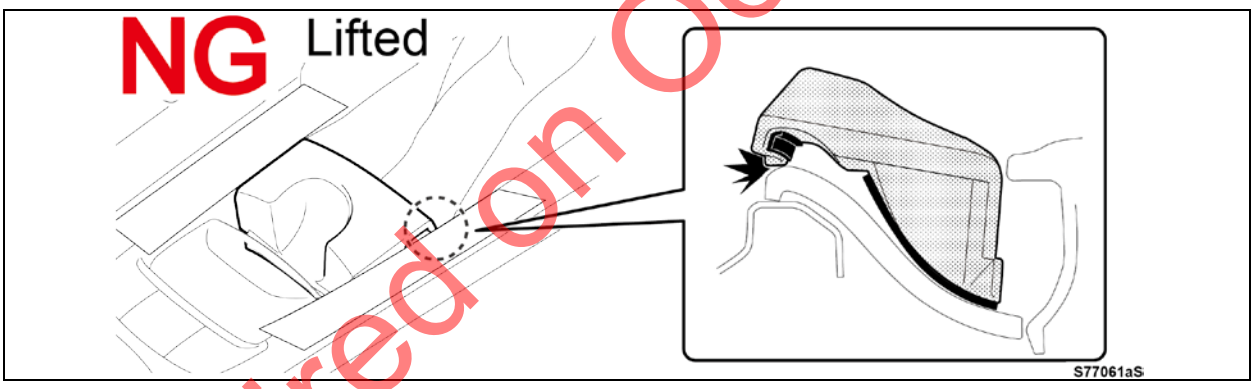

f. Gently press down the rear portion of the parking brake cover to lightly attach it.

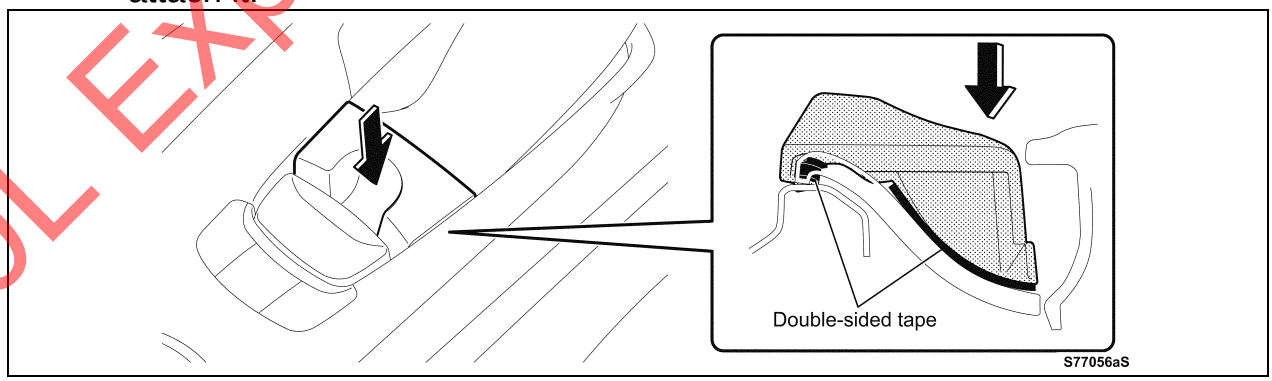

HOL Expired on October 5, 2020

4. CHECK PARKING BRAKE COVER FOR PROPER INSTALLATION

STOP

- **Check that the front end of the parking brake cover is flush with the upper console panel.**
- **If the front end is lifted, remove and reinstall the parking brake cover.**

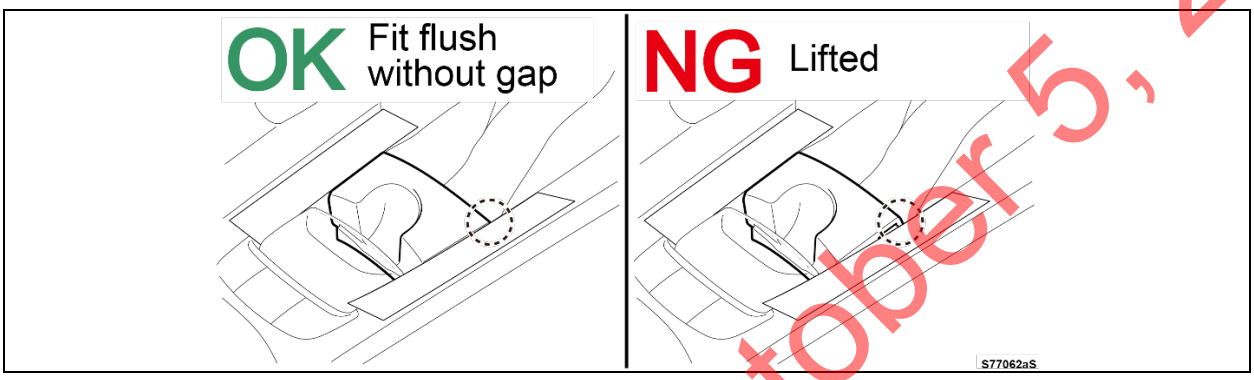

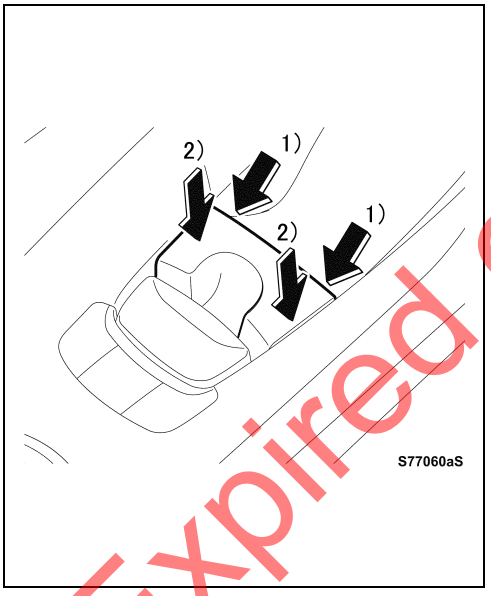

5. PERMANENTLY INSTALL PARKING BRAKE COVER

a. Firmly press on the parking brake cover by hand
   1) Press the front end of the parking brake cover rearward
   2) Press the rear portion of the parking brake cover downward

NOTE:
The time the adhesive tape takes to build up to its full strength is approximately 10 hours.
DO NOT apply excessive force during this cure time.

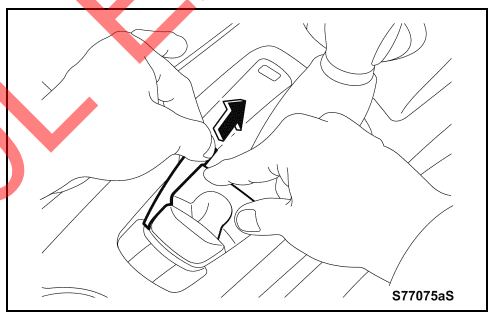

b. While pressing down on the parking brake cover to hold it in place, remove the spacer.

HOL Expired on October 5, 2020

◄ VERIFY REPAIR QUALITY ►

Confirm the NEW parking brake cover is firmly installed.

If you have any questions regarding this campaign, please contact your regional representative.

VIII. APPENDIX

A. CAMPAIGN DESIGNATION DECORDER

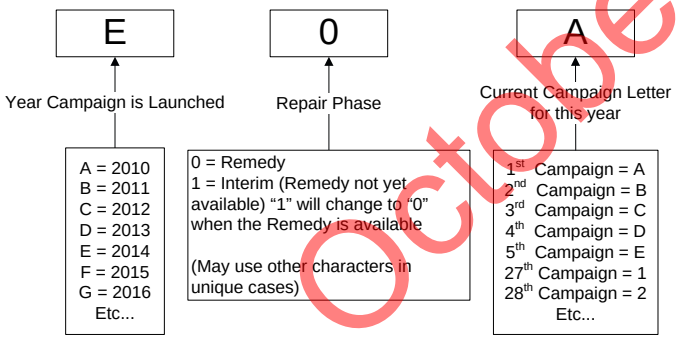

Examples:
A0D = Launched in 2010, Remedy Phase, 4th Campaign Launched in 2010
B1E = Launched in 2011, Interim Phase, 5th Campaign Launched in 2011
C1C = Launched in 2012, Interim Phase, 3rd Campaign Launched in 2012

HOL Expired on October 5, 2020