DEXTER®

DX SERIES

ELECTRIC/HYDRAULIC ACTUATOR

SERVICE MANUAL

DX SERIES ELECTRIC/HYDRAULIC ACTUATOR

www.dexteraxle.com

Introduction 2
Installation Instructions 2
Electrical Wire Colors and Function 3
Electrical Installation Requirements 4
Electrical Schematic 4
Test Electrical Operation 5
Bleeding and Brake Adjustment 5
Sleep Mode 6
Electric Controller Unit Testing/Adjusting 6
Troubleshooting Guide 7
Aftermarket Kits 7
Limited Warranty 8
Locations 9

⚠ CAUTION

This is the safety alert symbol. It is used to alert you to potential injury hazards. Obey all safety messages that follow this symbol to avoid possible injury or death.

Scan to view DX Series Actuator Installation Video

Introduction

CAUTION

Dexter DX Series systems should only be installed by a qualified technician.

This manual has been provided to guide you through the process of installing, operating, and maintaining your Dexter DX Series electrically controlled hydraulic brake actuation device (also referred to as DX Series brake actuator). This electrically powered unit has been designed and manufactured to give safe, reliable power to your hydraulic trailer brakes.

CAUTION

Please review and understand all installation manual instructions before beginning installation. Many steps are sequential so it is necessary to complete all elements as instructed.

Before proceeding, make sure that the unit is appropriate for your particular brakes. The E/H 1000 produces 1000 psi, typically used for duo-servo hydraulic drum brakes, while the E/H 1600 produces 1600 psi for most hydraulic disc brakes. Please refer to your brake manufacturer for proper operating pressures.

The Dexter DX Series brake actuator is compatible with many electric brake controllers, but the best performance will be achieved using an inertial type controller such as the Dexter Predator DX2®. The electronic timer type of controller is not recommended because these units use a fixed control that does not sense varying brake requirements.

CAUTION

It is the responsibility of the end user to ensure that their electric brake controller is compatible with the Dexter DX Series brake actuator. Dexter attempts to provide compatibility with most controllers available, but is unable to anticipate design changes that might be introduced by the various controller manufacturers.

Installation Instructions

The following materials are required to properly install the Dexter DX Series brake actuator. If your trailer is not already equipped with brake lines, you will need enough 3/16” diameter automotive brake line to connect the trailer brakes to the unit. Where possible, steel tubing is preferred.

- Four 1/4" threaded fasteners to mount the unit to the trailer.
- One quart of DOT 3, DOT 4, or DOT 5 brake fluid (from a new sealed container).
- One emergency breakaway kit - must include a 12 volt, 9 amp hour (minimum) battery.
- Wire (see Electrical Schematic, page 4.)

Location of the Dexter DX Series brake actuator is at the discretion of the trailer manufacturer or owner. When selecting the location, the following items should be considered:

1. The shorter the wiring between the unit and the electrical power source, the smaller the voltage drop.
2. The unit should be located so that the electrical wiring and brake lines can be neatly routed directly to the towing vehicle and trailer brakes. Special care should be taken to minimize the number of bends and fittings in the brake line circuits.
3. An emergency breakaway kit must be located on the trailer so that the trailer breakaway cable can be easily attached to the towing vehicle.
4. The Dexter DX Series brake actuator is powered from the electrical system on the tow vehicle. In order for the unit to function properly, it must have adequate electrical power (see Electrical Schematic, page 4.)
5. The Dexter DX Series brake actuator should not be placed in an area where it is susceptible to damage from trailer loads, road debris, or from being stepped on. Failure to protect the actuator from damage can cause the unit to malfunction and void the Dexter warranty.

Mounting consideration should be given to the following:

1. The unit must be level, with the filler neck up.
2. It is the responsibility of the installer to provide necessary fasteners for attachment of the actuator to the trailer.
3. Mount unit where it will not be submerged in water.
4. Mounting near the hitch is preferred. Do not mount near the trailer axles or rear of the trailer.

CAUTION

The Dexter DX Series brake actuator contains sensitive electronics that must be protected. Drilling additional holes in the housing, electrostatically painting, or welding anywhere on the unit will damage the unit making it inoperable and will void the manufacturer's warranty. Always remove the unit from the trailer before doing any welding repair or modifications to the trailer structure.

Connect the trailer brake lines to the actuator as follows:

1. Remove the rubber or plastic plug from the 3/16" inverted flare brake port.
2. Brake line must be compatible with DOT 3, DOT 4, or DOT 5 brake fluid.
3. Flush existing brake system and lines until they are free of any contaminants using DOT 3, DOT 4, or DOT 5 brake fluid prior to connecting to the Dexter DX Series brake actuator.
4. Connect the brake line from the trailer brakes to the 3/16" inverted flare fitting on the actuator. Do not tighten the 3/16" brake line adapter more than the 22 Ft. Lbs. used at factory installation.

CAUTION

Do not overfill fluid reservoir. Fluid will expand. Max fill level is 3/8" below bottom of filler neck.

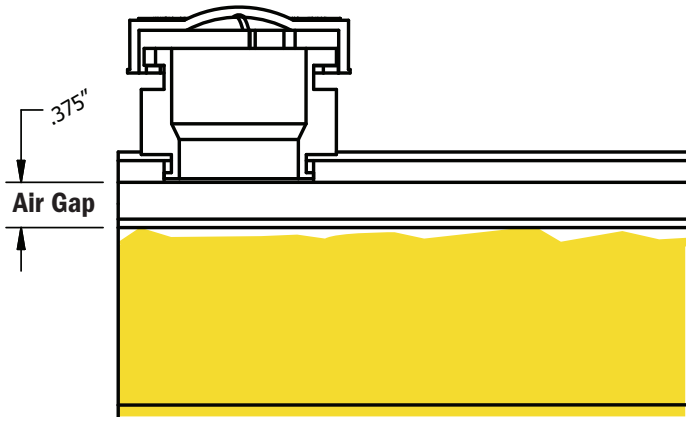

Fill the unit with DOT 3, DOT 4, or DOT 5 brake fluid, while maintaining a 3/8" air gap below the filler neck.

CAUTION

Always use new DOT 3, DOT 4, or DOT 5 brake fluid from a sealed container. Never attempt to reuse old or dirty fluid. Do not overfill the unit. Take care to protect painted surfaces from contact with the brake fluid. Wash off any spilled brake fluid.

Mount the emergency breakaway switch and emergency breakaway battery on the trailer, as detailed in the instruction sheets provided with the emergency breakaway kit.

Bolt Mounting Pattern

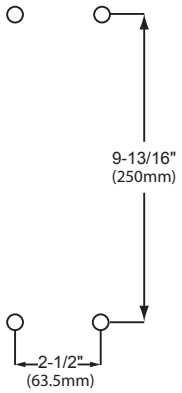

Electrical Wire Colors and Function

CAUTION

Only use a maintained battery with no less than 12.5v (see battery chart below). Testing with a battery charger or other device will cause loss of function.

% Battery Charge Chart

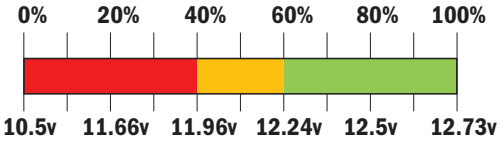

CAUTION

Undersized wire will increase electrical resistance and will prevent proper operation of this unit.

BLACK – 30 amp 12 volt supply from tow vehicle*

BLUE – Output from electronic brake controller in tow vehicle

WHITE – Trailer and tow vehicle ground

YELLOW – Cold side of breakaway switch

It is important that wire lengths for the BLACK power lead and WHITE ground lead be no longer than 25 feet from the DX Series brake actuator to the supply power (i.e. on board trailer battery or the tow

Electrical Schematic

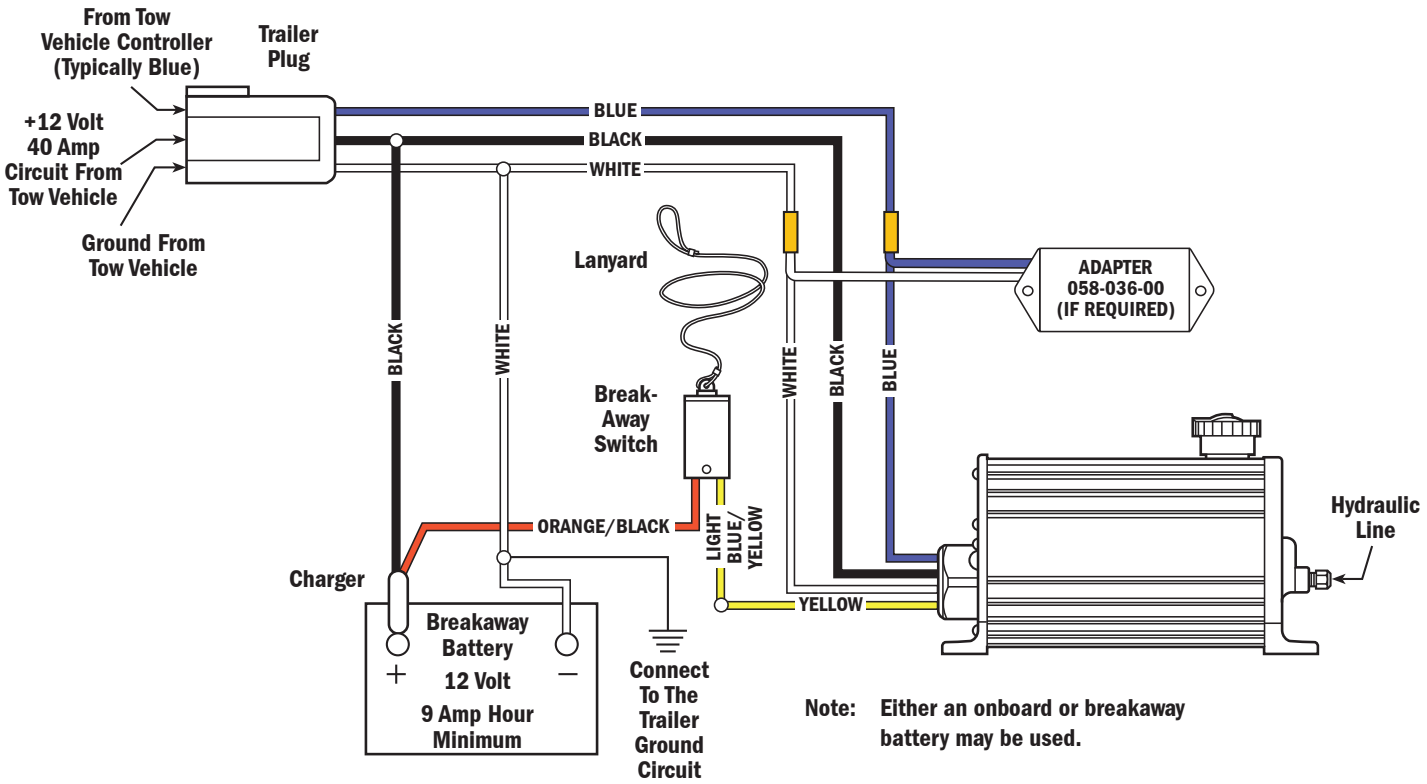

vehicle battery). The DX Series brake actuator needs to be located as close as possible to the battery near the front of the trailer. **DO NOT mount the DX Series brake actuator near the trailer axles or rear of the trailer.** Having the wire length longer than 25 feet may cause issues with performance and the normal operation of the unit.

It is critical that the BLACK power lead and WHITE ground lead from the tow vehicle to the input of the actuator are sized and properly terminated (i.e. dedicated 30-40* amp circuit on the tow vehicle – 12 gauge wire minimum). 10-gauge wire is recommended to optimize performance. Consult the SAE wiring guidelines for proper trailer electrical harness design.

***Low temperature applications below 0°F require a 40-amp circuit.**

The blue wire from the electric brake controller is connected through the trailer plug to the blue wire on the actuator. The yellow wire from the DX Series brake actuator is connected to the cold side of the trailer emergency breakaway switch. **Under no circumstances should the actuator blue wire and the DX Series brake actuator yellow wire be connected together, nor should the blue wire ever be grounded.**

The white wire is connected to the trailer ground and also connected to the tow vehicle ground through the trailer plug. The black wire is connected to the +12V power line from the tow vehicle. The black wire can also be connected to large on-board batteries. The black wire is connected to the small breakaway battery only through the black wire on the charger of the breakaway battery. When connecting and disconnecting the black wire, sparking may occur. This is a normal occurrence.

Electrical Installation Requirements

Requires an Electric Brake Controller – The Dexter DX Series brake actuator is intended to be used with an electric brake controller in the tow vehicle. The unit will operate with a wide variety of controllers but provides optimum performance when used with a Dexter electric brake controller . The electric brake controller must have an output capacity of at least 5 amps for proper operation of the Dexter DX Series brake actuator. Although compatible, time based brake controllers are not recommended.

CAUTION

It is the responsibility of the end user to ensure that their electric brake controller is compatible with the Dexter DX Series brake actuator. Dexter attempts to provide compatibility with most controllers available, but is unable to anticipate design changes that might be introduced by the various controller manufacturers.

Electrical Connections – Make sure all electrical connections are clean, dry, weather tight, and secure to prevent damage to the wiring from dragging or becoming entangled with foreign objects. A dedicated ground connection between the tow vehicle and trailer is also required.

Breakaway Battery Requirement – To comply with federal requirements, the trailer must be equipped with a breakaway switch and battery. The breakaway battery needs to have a minimum capacity of 9 amp hours and needs to be maintained in a fully charged condition at all times. The breakaway battery should be checked for proper charge level before every use.

Charging the Breakaway Battery – The breakaway battery must be kept fully charged at all times in order to function properly. Use only those breakaway battery kits that include a charging device. Do not attempt to charge the breakaway battery directly from the tow vehicle without the appropriate charging device.

Test Electrical Operation

1. Attach the trailer to the towing vehicle. Do not connect trailer plug to tow vehicle until step #2 is completed.
2. Pull the breakaway switch. The Dexter DX Series brake actuator should run. If the unit does not run, check breakaway battery condition and system wiring. Reset the breakaway switch, which will turn the unit off. Note: When the unit is running, the motor will generate a "hum" that changes pitch as the unit builds pressure. This is normal.
3. Connect trailer plug to tow vehicle.
4. Turn the ignition switch on and turn the electric brake controller on. Inertia type controllers will often require the vehicle to be moving in order for the Dexter DX Series brake actuator to come on by means of the brake pedal. If the unit does not run, check system wiring.
5. Apply the controller manual slide. The Dexter DX Series brake actuator should run and brake lights come on.

⚠ CAUTION

Testing the Dexter DX Series brake actuator confirms that it is operating. It DOES NOT confirm that the brakes are operating properly. Regular inspection, adjustment, and maintenance of the brakes, lines, hoses, drums, discs, fluid, and other associated components is necessary to ensure proper brake operation.

6. Some brake controllers will not produce a high enough signal voltage to actuate the trailer brakes when the vehicle is at a standstill. Minimal trailer brake force is produced when the controller voltage output to the DX Series brake actuator is at least 3 VDC. Maximum trailer brake force is achieved at 12 VDC on the actuator blue wire.
7. When the tow vehicle brakes are released, the unit may continue to run for a few seconds.

Bleeding and Brake Adjustment

1. It typically is much easier to bleed the brakes with two people working together.
2. Special care must be taken to insure that the Dexter DX Series brake actuator does not run out of brake fluid. Check the fluid level frequently during the bleeding process.
3. Block the wheels on the trailer and towing vehicle.
4. If the trailer is equipped with drum brakes, check that the brake running clearances are properly adjusted consistent with the trailer manufacturer's recommendations.

CAUTION

Failure to properly adjust the brakes on trailers equipped with drum brakes can result in slower response time of the Dexter DX Series brake actuator.

5. Install plastic tubing onto the bleeder screw of the wheel cylinder/caliper farthest from the Dexter DX Series brake actuator. If towed vehicle has multiple axles, always start with the rear axle first.
6. Immerse the free end of the plastic tube in a clean clear container partially filled with brake fluid.
7. Open the bleeder screw one half turn on the wheel cylinder/caliper.
8. To activate the Dexter DX Series brake actuator, turn the ignition switch on and use manual slide on the brake controller.
9. Watch the free end of the bleeder hose for air bubbles escaping into the clear container. Continue to bleed the wheel cylinder/caliper until the fluid becomes clear and free of bubbles.

CAUTION

Do not run the Dexter DX Series brake actuator without adequate brake fluid in the reservoir as it may damage the unit and void the warranty. Check all bleeder screws to ensure that they are securely closed and do not leak.

10. Tighten the bleeder screw, turn off the Dexter DX Series brake actuator, and remove plastic tubing from the bleeder screw. Bleeding of the wheel cylinder/caliper is now complete.
11. Refill the Dexter DX Series brake actuator with brake fluid.
12. Continue the above process (steps 5 through 11) on the next farthest brake away from the actuator.
13. Repeat these steps until all the brakes have been bled.
14. New trailers with disc brakes should be bled at least twice. Any air in the brake system will cause brake delay with an E/H brake actuation system.

CAUTION

Ensure no debris enters the fluid reservoir tank while the cap is removed. Failure to do so may have an effect on product life.

Sleep Mode

DX Series E/H Actuator will automatically go into sleep mode after 5 hours of not receiving input from blue (brake controller) or yellow (breakaway switch) wire to conserve power consumption on trailer battery. Sleep mode timer will reset if power/ground is removed. The DX Series E/H Actuator will wake up from this sleep mode state on the first brake request signal from the Tow vehicle's brake controller (blue wire) or when the breakaway switch pin has been pulled (yellow wire).

Disconnect battery from DX Series E/H Actuator if trailer is going to be stored for longer than one month.

Electric Controller Unit Testing/Adjusting

1. Adjust the gain setting on the electric brake controller to a mid range setting.
2. Drive vehicle at 10 to 15 m.p.h.
3. Apply the brakes. If braking is too severe, adjust the gain setting down to decrease pressure and retest. If braking is inadequate, increase the gain setting on the electric brake controller and retest.
4. Repeat this process until the brakes respond appropriately.

⚠ CAUTION

The appropriate pressure setting will vary depending on the weight of the load being transported on the trailer, weather conditions and road conditions. The "Testing and Adjustment of Electronic Controller Unit" procedure should be repeated each time the trailer is used. Failure to properly adjust the Dexter DX Series brake actuator may result in poor brake performance and could result in serious or fatal injuries and/or property damage.

Troubleshooting Guide

Unit will not run or brakes are slow to respond. To determine if the unit is functioning properly, perform the checks outlined below

1. Verify that the trailer and tow vehicle are wired according to the electrical schematic shown in “Electrical Requirements”.
2. Re-bleed the trailer brakes. Any air in the trailer brake system causes brake delay.
3. If the trailer is equipped with drum brakes, re-adjust the drum brakes to the trailer manufacturer’s recommended running clearance.
4. Trailer wiring that is too small can cause slow response (see section on Electrical Installation Requirements).
5. Slow response can be caused by brake line restrictions. The trailer brake lines must be at least 3/16” in diameter. Steel tubing must be used as much as possible. Using too much flexible hose may cause slow brake response.
6. Check to see if the white ground wire runs directly to the tow vehicle ground. IT MUST NOT BE GROUNDED TO THE TRAILER ONLY. IT IS IMPORTANT THAT THIS GROUND WIRE RUNS DIRECTLY TO THE TOW VEHICLE’S BATTERY GROUND. NO EXCEPTIONS.
7. Detach all wires from the Dexter DX Series brake actuator leaving the blue, black, white, and yellow wires loose. It is important that the unit is disconnected from any other wires going to the towing vehicle or breakaway switch and breakaway battery. Failure to do so may result in a faulty test.
8. Using a 12 volt battery, connect the white wire to the negative (-) terminal of the battery.
9. Connect the black wire to the positive (+) terminal of the battery and the DX Series brake actuator will click once. The motor should not run. If the motor runs, the DX Series brake actuator may be defective.
10. Leave the white wire connected to the negative (-) terminal of the battery.
11. Connect the blue and black wires together to the positive (+) terminal of the battery.
12. The motor should run and the unit should pressurize. If this does not occur, the unit may be defective.
13. Leave the white wire connected to the negative (-) terminal of the battery.
14. Connect only the yellow wire to the positive (+) terminal of the battery.
15. The motor should run and the unit should pressurize. If this does not occur, the unit may be defective.
16. If the unit checks OK, reconnect the wires leading to the trailer plug and repeat steps 8 through 14 at the trailer plug. If you do not get the same results as before, the problem is in the trailer wiring or the electronic brake controller.

Using the breakaway system to troubleshoot a unit that is not operating correctly

1. With a fully charged breakaway battery and trailer plug disconnected, pull the breakaway switch on the trailer.
   a. If the unit runs and builds pressure, the breakaway system is functioning properly.
   b. If the unit runs and builds pressure when the breakaway switch is pulled but will not function under normal operating conditions, the problem most likely is a defective electric brake controller or defective wiring between the tow vehicle and Dexter DX Series brake actuator.
   c. If the unit runs but will not build pressure when the breakaway switch is pulled, the Dexter DX Series brake actuator may be malfunctioning.
   d. If the unit does not run, measure the DC voltage between the white wire and the yellow wire. If the voltage is less than 12 volts, either the breakaway switch or the breakaway wiring is defective.
2. After completing the above steps, reset the breakaway switch and reconnect the trailer plug.

Trailer brakes too aggressive

1. Reduce the gain setting on the electric brake controller.
2. Check brake adjustment.

Trailer brakes not aggressive enough

1. Increase the gain setting on the electric brake controller.
2. Check brake adjustment.

Aftermarket Kits

Description	Kit Number
DX Series brake actuator Fill Cap & Gasket	K71-685-00
DX Series Brake Actuator Gaskets	K71-688-00
DX Series Compatibility Adapter	K58-036-00

Limited Warranty

What Products Are Covered
All Dexter® Axle Company ("Dexter") trailer axles, suspensions, and brake control systems manufactured on or after September 1, 2016, excluding Dexter 6000 series Manufactured Housing Axles. Additional exclusions include the following brands: Silent Drive by Dexter, Kodiak, Dexter's Door and Ventilation Products, and Heavy Duty Steering and Lift Axles, which are covered by separate warranties specific to those products.

Limited 1 Year Warranty
Grease & oil seals (FOR ALL PRODUCTS), couplers, and Dexter DX6.6 Surge Actuator have a one (1) year limited warranty to the original purchaser from the date of original retail purchase.

Limited 2 Year Warranty
Dexter warrants to the original purchaser that its electric over hydraulic actuators (DX Series and BrakeRite®), Airflex® air supply components, and Tow Assist™ electronic components shall be free from defects in material and workmanship for a period of two (2) years from the date of original retail purchase.

Limited 5 Year Warranty
Dexter warrants to the original purchaser that its sprung axles, sprung suspension systems, Versa~Flex™ axles, Eliminator™ axles, hydraulic surge actuators (except Dexter DX6.6 Surge Actuator), and Dexter Genuine Replacement Parts shall be free from defects in material and workmanship for a period of five (5) years. The warranty period shall begin from the date of original retail purchase.

Limited 6 Year Warranty
Dexter warrants to the original purchaser that its Vortex™ and Vault® high performance lubrication systems shall be free from defects in material and workmanship for a period of six (6) years from the date of original retail purchase.

Limited 7 Year Warranty

Dexter warrants to the original purchaser that its Predator Series® electric brake controllers shall be free from defects in material and workmanship for a period of seven (7) years from the date of original retail purchase.

Limited 10 Year Warranty
Dexter warrants to the original purchaser that the suspension components of its Torflex® axles shall be free from defects in material and workmanship for a period of ten (10) years from the date of original retail purchase.

Exclusive Remedy
Dexter will, at its option, repair or replace the affected components of any defective axle, repair or replace the entire defective axle, or refund the lesser of the original purchase price and the then-current list price of the axle or components. In all cases, a reasonable time period must be allowed for warranty repairs to be completed. Allowance will only be made for installation costs specifically approved by Dexter.

What You Must Do
In order to make a claim under these warranties:

1. You must be the original purchaser of the trailer and/or Dexter Genuine Replacement Parts.
2. You must promptly notify Dexter after detection of any defect, but in any case within the applicable warranty period of such defect, and provide us with the axle or applicable component serial number and any substantiation of such defect which may include, but is not limited to, the return of part(s) that we may reasonably request.
3. The axles, suspensions and components must have been installed and maintained in accordance with good industry practice and any specific Dexter recommendations, including those specified in Dexter's current manuals.

Exclusions
These warranties do not extend to and do not cover defects caused by:

1. The connecting of brake wiring to the trailer wiring or trailer wiring to the towing vehicle wiring.
2. The attachment of the running gear to the frame.
3. Parts not supplied by Dexter.
4. Any damage whatsoever caused by or related to any alteration of the axle including welding supplemental brackets to the axle.
5. Use of an axle on a unit other than the unit to which it was originally mounted.
6. Normal wear and tear.
7. Improper alignment.
8. Improper installation.
9. Unreasonable use (including trailer overloading or improper loading and failure to provide reasonable and necessary maintenance as specified in Dexter's current manuals including required maintenance after "Prolonged Storage").
10. Improper torque values and torqueing of wheel nuts. (The proper torqueing procedure and torque values are contained in Dexter's current manuals).
11. Improper or lack of maintenance.
12. Cosmetic finish or corrosion.

Limitations
1. **In all cases, Dexter reserves the right to fully satisfy its obligations under the Limited Warranties by refunding the lesser of the original purchase price and the then-current list price of the defective axle (or, if the axle has been discontinued, of the most nearly comparable current product).**
2. Dexter reserves the right to furnish for any substitute replacement component or product in the event an axle or any component of the axle is discontinued or is otherwise unavailable.
3. These warranties are nontransferable.

General
THE FOREGOING WARRANTIES ARE EXCLUSIVE AND IN LIEU OF ALL OTHER WARRANTIES, WHETHER WRITTEN, ORAL OR IMPLIED, IN FACT OR IN LAW (INCLUDING ANY WARRANTY AGAINST INFRINGMENT OR OF MERCHANTABILITY OR FITNESS FOR A PARTICULAR PURPOSE).

These warranties give you specific legal rights, and you may also have other rights which vary from state to state.

DEXTER HEREBY EXCLUDES INCIDENTAL AND CONSEQUENTIAL DAMAGES, INCLUDING BUT NOT LIMITED TO, LOSS OF TIME, INCONVENIENCE, LOSS OF USE, TOWING FEES, TELEPHONE CALLS, COST OF MEALS OR LODGING, FOR ANY BREACH OF ANY EXPRESS OR IMPLIED WARRANTY.

Some states do not allow limitations on how long an implied warranty lasts, or the exclusion or limitation if incidental or consequential damages, so the above exclusion or limitation may not apply to you.

Inquiries regarding these warranties should be sent to:

Dexter Axle Company
P.O. Box 250
Elkhart, IN 46515

Note: Current Dexter manuals can be found at **www.dexteraxle.com**.

2900 Industrial Parkway East · Elkhart, IN 46516 · Phone: (574) 295-7888 · Fax: (574) 295-8666
© 1995-2020 Dexter Axle Company. LIT-400-00 Rev. P | 2020.06

Genuine Dexter axles and components are available nationwide from our plant locations listed below or through our network of distributors. Check our website for the distributor nearest you.

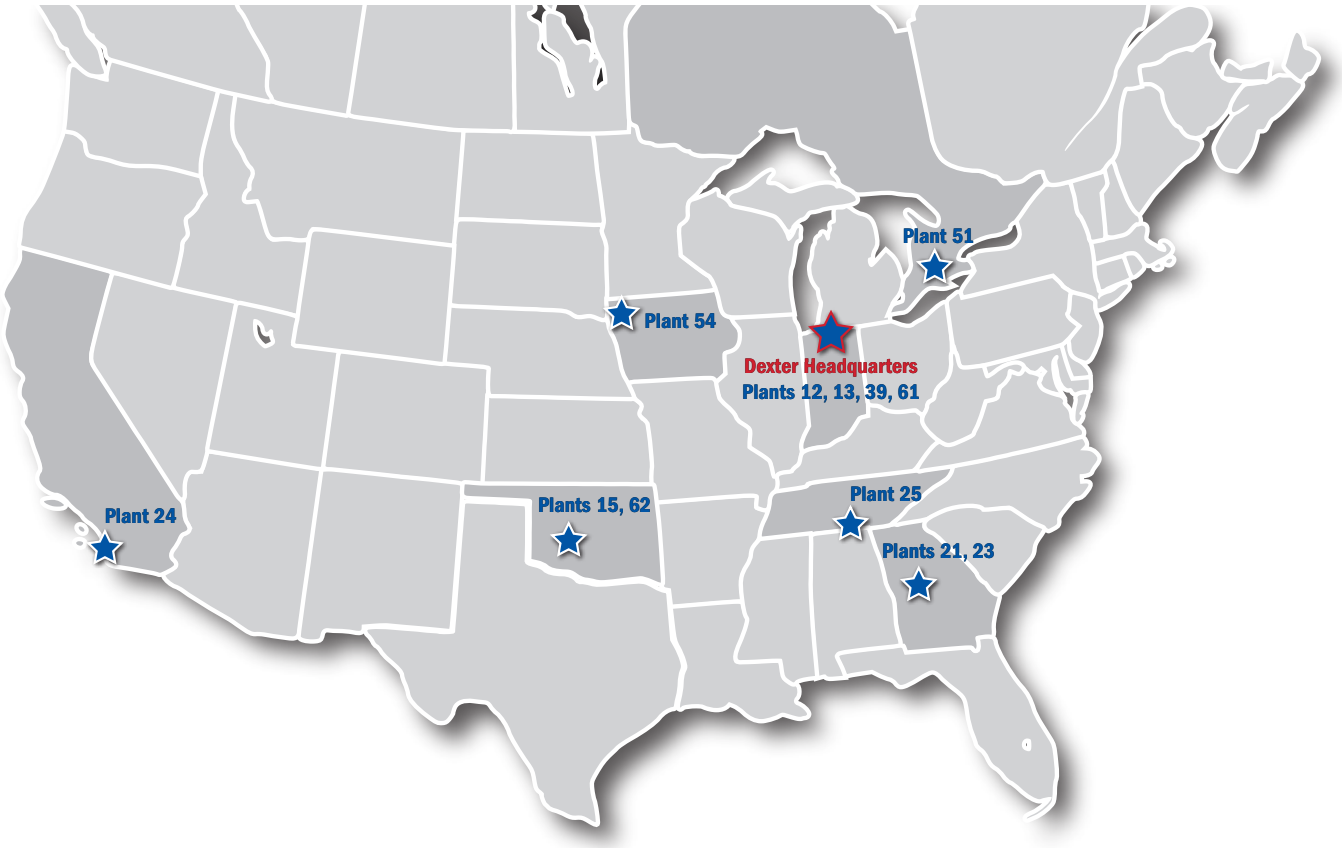

Dexter - Headquarters

2900 Industrial Parkway East ■ Elkhart, Indiana 46516
Phone: 574-295-7888 ■ Fax: 574-295-8666
www.dexteraxle.com

Dexter - Plant 12
301 West Pearl Street
Fremont, Indiana 46737
Phone: 260-495-5100
Fax: 260-495-1701

Dexter - Plant 13
500 South 7th Street
Albion, Indiana 46701
Phone: 260-636-2195
Fax: 260-636-3030

Dexter - Plant 15
500 Southeast 27th Street
El Reno, Oklahoma 73036
Phone: 405-262-6700
Fax: 405-262-9089

Dexter - Plant 21
199 Perimeter Road
Monticello, Georgia 31064
Phone: 706-468-6495
Fax: 706-468-2966

Dexter - Plant 23
5600 Bucknell Drive SW
Atlanta, Georgia 30336
Phone: 404-477-6899
Fax: 470-443-1715

Dexter - Plant 24
135 Sunshine Lane
San Marcos, California 92069
Phone: 760-744-1610
Fax: 760-744-1616

Dexter - Plant 25
1041 Baxter Lane
Winchester, Tennessee 37398
Phone: 931-967-5101
Fax: 877-457-9861

Dexter - Plant 39
902 South Division Street
Bristol, Indiana 46507
Phone: 574-848-4491
Fax: 574-848-4825

Dexter - Plant 51
347 King Street West
Ingersoll, Ontario N5C 2K9
Phone: 226-242-5291
Fax: 226-444-0474

Silent Drive by Dexter - Plant 54
1300 Arizona Place SW
Orange City, Iowa 51041
Phone: 712-737-4865
Fax: 712-737-2865

Dexter - Plant 61
21611 Protecta Drive
Elkhart, Indiana 46516
Phone: 574-294-6651
Fax: 574-295-6626

Dexter - Plant 62
301 North Kennedy Street
Shawnee, Oklahoma 74801
Phone: 405-273-9315
Fax: 405-273-1054

NO PART OF THIS MANUAL MAY BE REPRODUCED WITHOUT DEXTER'S PERMISSION. ALL PART NUMBERS, DIMENSIONS AND SPECIFICATIONS IN THIS MANUAL ARE SUBJECT TO CHANGE WITHOUT NOTICE.

Together. *Carrying what matters most.*

www.dexteraxle.com

2900 Industrial Parkway East - Elkhart, IN 46516
Phone: 574-295-7888 - Fax: 574-295-8666

ISO 9001:2015 Certified

© 1990 - 2020 Dexter Company. LIT-020-00