# Service Bulletin

Bulletin No.: 20-NA-135
Date: July, 2020

# TECHNICAL

**Subject:** **Power Liftgate and/or Instrument Panel Cluster (IPC) Inoperative, No Audio, Malfunction Indicator Lamp (MIL) Illuminated - DTC P159F-00, U0184-00, U0198-00 and/or U1501-00 Set**

| Brand: | Model: | Model Year: | | Date Breakpoint: | | Engine: | Transmission: |
|---|---|---|---|---|---|---|---|
| | | from | to | from | to | | |
| Buick | Encore GX | 2020 | 2020 | SOP | March 6, 2020 | All | All |
| Chevrolet | Trailblazer (VIN M) | 2021 | 2021 | | | | |

| | |
|---|---|
| **Involved Region or Country** | North America, China, Israel, Korea, Ukraine |
| **Additional Options (RPOs)** | Power Liftgate (TC2) (if equipped) |
| **Condition** | Some customers may comment on the MIL being illuminated, and no audio from the radio.<br>Some customers may also comment that the liftgate and/or the IPC is inoperative.<br>Some technicians may find one or more of the following DTCs set:<br>• P159F 00: Fuel Economy Mode Switch Circuit Low Voltage<br>• U0184-00: Lost Communication With Radio<br>• U0198-00: Lost Communication with Telematics Communication Interface Control Module<br>• U1501-00: LIN Bus |
| **Cause** | The cause of the condition may be that the X200 connector was not fully connected and locked, resulting in an open circuit. |
| **Correction** | Inspect the X200 IP harness to Body harness connector following the steps in the Service Procedure below. |

*Copyright 2020 General Motors LLC. All Rights Reserved.*

## Service Procedure

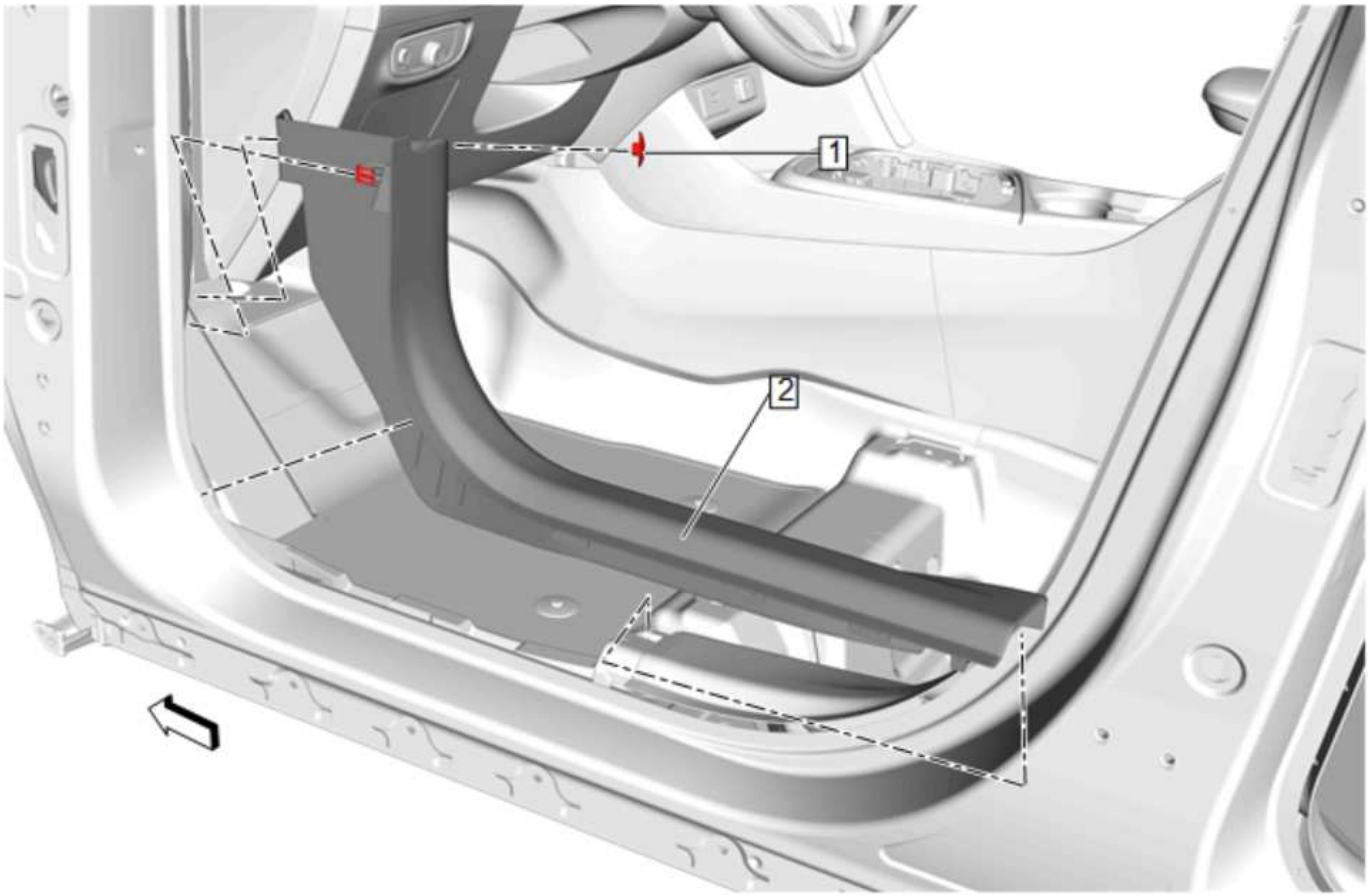


5209005

1. To access the connector, remove the left front side door sill garnish molding (2). Refer to *Front Side Door Sill Garnish Molding Replacement* in SI.

5437484

**Note:** First inspect the X200 connection BEFORE disconnecting.

2. Inspect the X200 IP harness to Body harness connector (7), located at the lower Left A-Pillar, for possibly not being seated correctly.
3. Ensure that the wires are not twisted, not too taut, and the routing is correct.
4. Also ensure that the connection is correctly seated on all 4 sides.
5. Verify that the condition has been eliminated.

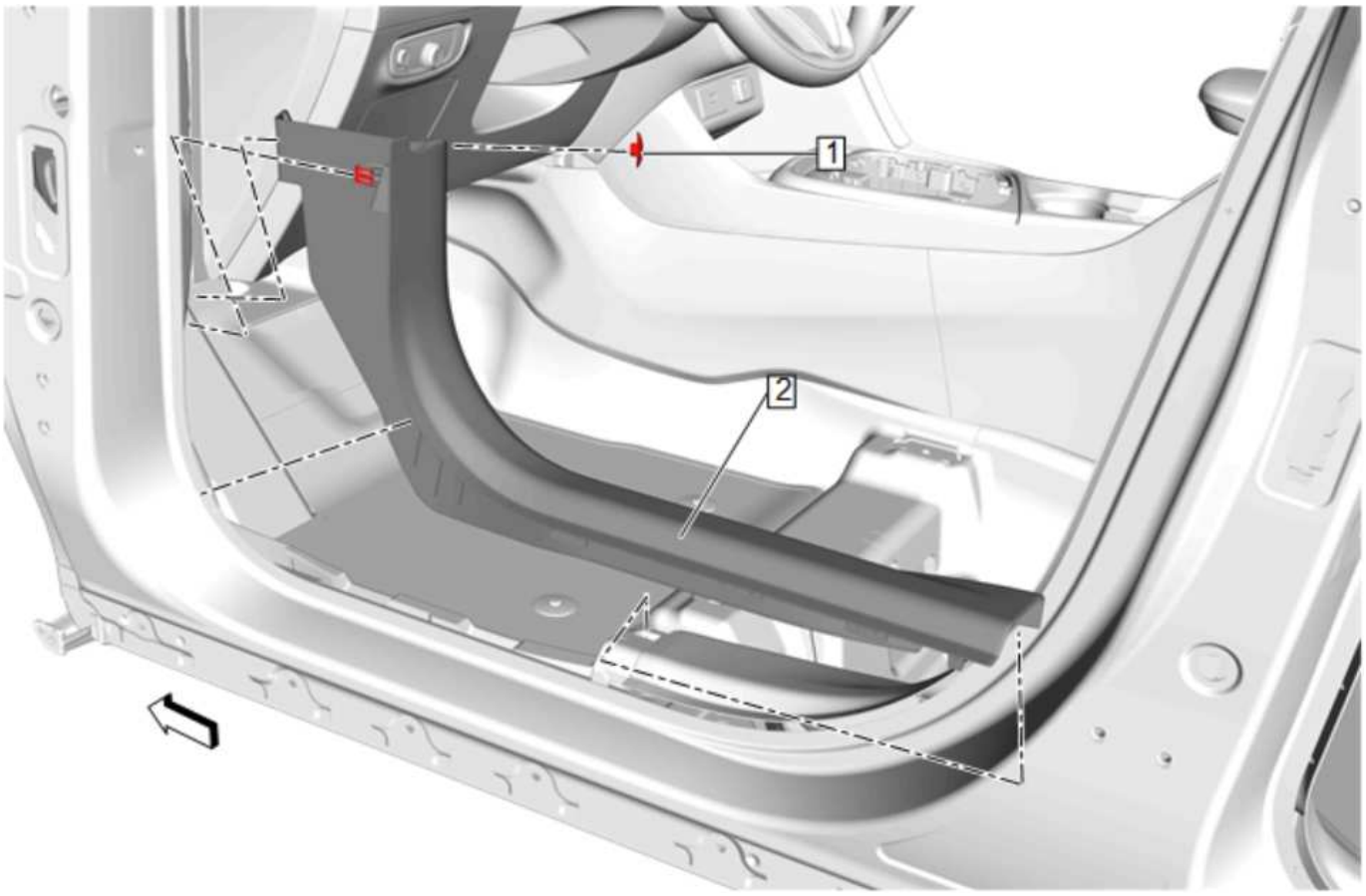


5209005

6. Reinstall the left front side door sill garnish molding (2). Refer to *Front Side Door Sill Garnish Molding Replacement* in SI.

## Parts Information

No parts are normally required for this repair.

## Warranty Information

For vehicles repaired under warranty, use:

| Labor Operation | Description | Labor Time |
|---|---|---|
| 5430922 | Connector Reconnection | Use Published Labor Operation Time |

| | |
|---|---|
| **Version** | 2 |
| **Modified** | Released June 16, 2020<br>July 07, 2020 – Added an Additional Options (RPOs) section and updated the Subject and Condition sections to add additional DTCs, Power Liftgate and IPC information. |

**GM bulletins are intended for use by professional technicians, NOT a "do-it-yourselfer". They are written to inform these technicians of conditions that may occur on some vehicles, or to provide information that could assist in the proper service of a vehicle. Properly trained technicians have the equipment, tools, safety instructions, and know-how to do a job properly and safely. If a condition is described, DO NOT assume that the bulletin applies to your vehicle, or that your vehicle will have that condition. See your GM dealer for information on whether your vehicle may benefit from the information.**

**WE SUPPORT VOLUNTARY TECHNICIAN CERTIFICATION**