Technical product information

Topic	Air spring fault finding
Market area	Bentley: worldwide (2WBE)
Brand	Bentley
Transaction No.	2053492/6
Level	EH
Status	Released for publishing
Release date	02-Jul-2020

New customer code

Object of complaint	Complaint type	Position
running gear -> shock absorber/suspension control -> automatic shock absorber adjustment	functionality -> without function / defect	
running gear -> adaptive suspension, pitch and roll compensation	functionality	
running gear -> shock absorber/suspension control -> self-levelling suspension	functionality -> without function / defect	

Vehicle data

Mulsanne

Sales types

Type	MY	Brand	Designation	Engine code	Gearbox code	Final drive code
3Y2*	2011	E		*	*	*
3Y2*	2012	E		*	*	*
3Y2*	2013	E		*	*	*
3Y2*	2014	E		*	*	*
3Y2*	2015	E		*	*	*
3Y2*	2016	E		*	*	*
3Y2*	2017	E		*	*	*
3Y2*	2018	E		*	*	*
3Y2*	2019	E		*	*	*
3Y2*	2020	E		*	*	*
3Y6*	2017	E		*	*	*
3Y6*	2018	E		*	*	*
3Y6*	2019	E		*	*	*
3Y6*	2020	E		*	*	*

Continental Series and Flying Spur

Sales types

Type	MY	Brand	Designation	Engine code	Gearbox code	Final drive code
39*	2012	E		*	*	*
39*	2013	E		*	*	*
39*	2014	E		*	*	*
39*	2015	E		*	*	*
39*	2016	E		*	*	*
39*	2017	E		*	*	*
39*	2018	E		*	*	*
39*	2019	E		*	*	*
3W*	2004	E		*	*	*
3W*	2005	E		*	*	*
3W*	2006	E		*	*	*
3W*	2007	E		*	*	*
3W*	2008	E		*	*	*
3W*	2009	E		*	*	*
3W*	2010	E		*	*	*
3W*	2011	E		*	*	*
3W*	2012	E		*	*	*
3W*	2013	E		*	*	*

4W*	2014	E		*	*	*
4W*	2015	E		*	*	*
4W*	2016	E		*	*	*
4W*	2017	E		*	*	*
4W*	2018	E		*	*	*
4W*	2019	E		*	*	*

New Continental GT

Sales types

Type	MY	Brand	Designation	Engine code	Gearbox code	Final drive code
3S3*	2018	E		*	*	*
3S3*	2019	E		*	*	*
3S3*	2020	E		*	*	*

Bentayga series

Sales types

Type	MY	Brand	Designation	Engine code	Gearbox code	Final drive code
4V1*	2017	E		*	*	*
4V1*	2018	E		*	*	*
4V1*	2019	E		*	*	*
4V1*	2020	E		*	*	*
4V1*	2021	E		*	*	*

New Continental GTC

Sales types

Type	MY	Brand	Designation	Engine code	Gearbox code	Final drive code
3S4*	2019	E		*	*	*
3S4*	2020	E		*	*	*

New Flying Spur

Sales types

Type	MY	Brand	Designation	Engine code	Gearbox code	Final drive code
ZG2*	2020	E		*	*	*

Documents

Document name
master.xml

Customer statement / workshop findings

The front and/or rear suspension appears to have dropped.

Technical background

The list of Bentley vehicles below are fitted with air springs as part of the suspension system. Should air leak from the air springs, this will cause the suspension to drop. However, the dropping of the suspension does not necessarily mean that the air spring is faulty.

The "Measure" section of this TPI describes how and where to check for air leaks on the front and rear air springs, the air pump compressor, pipes, valve unit and air reservoirs. This includes potential air leak points on the air springs and also the locations of an air leak that can be repaired without the need to replace an air spring.

These checks should be carried out in conjunction with the Elsapro procedure " Air suspension – To check" with the use of the special tool " Air suspension leak tester VAS 751 001" shown in the image below as item (1). Refer to Elsapro, Repair Group 43, " Air suspension – To check".

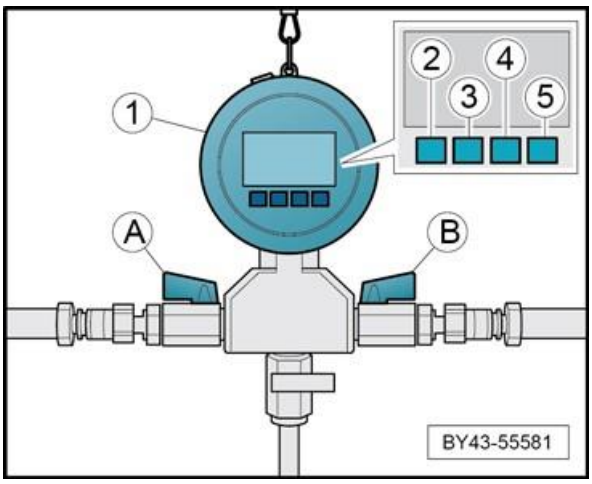

Please follow and complete the check list within the "Measure" section of this TPI to help in diagnosing the issue *(the check list does not need to be sent as an attachment should a DISS technical query be raised)*.

Should a leak be found from an air spring, compressor, valve unit or reservoir, please raise a DISS technical query and include as much information as possible including photograph/s of the leak/s location. Once the DISS ticket has been submitted please await clarification from your TSC before commencing with replacing any of the suspected faulty air springs.

Mandatory reporting is applicable for all air spring related issues.

Production change

Not applicable

Measure

Reference chart

Please use this generic "Reference Chart" in conjunction with the customer description of the fault and the "Standard Ambient Conditions" of the DTC's if present, to focus on the relevant area (ie: if a DTC is pointing out to the accumulator and the event data from the DTC and the customer description explains that the issue appear while the vehicle was driving, then the potential source of the leak well might be in between reservoir, valve unit or compressor as these three components are active in these particular conditions).

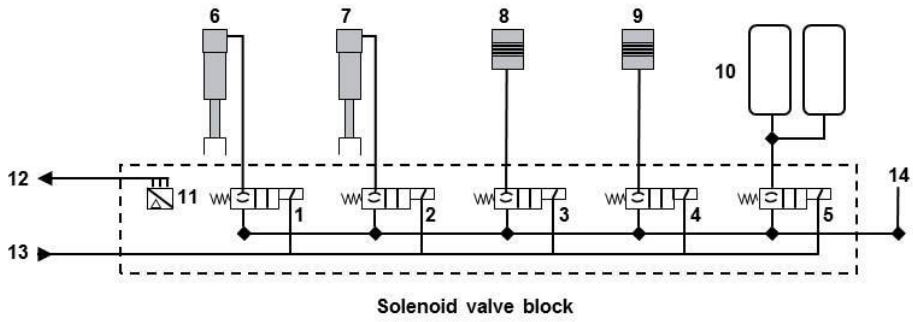

Component	Description
1 - 5	Solenoid valves
6 & 7	Front axle suspension struts
8 & 9	Rear axle suspension units
10	Pressure accumulator
11	Pressure sensor
12	Pressure reading
13	Electrical activation of solenoid valves
14	Compressor connection

Procedure

Position the vehicle on a flat and level surface and allow it to cool down.

- Important: Set the vehicle suspension into “Jack” mode.

Adhere strips of masking tape (1) from the centre of each wheel to the highest part of the wheel arch as shown, making sure they are applied taut.

Using a tape measure (2), also measure and take note of the ride heights (A- A) at all four corners of the vehicle. See Figure 1.

Figure 1

Leave the vehicle overnight and again measure the ride heights (A-A) at all four corners of the vehicle. Compare these values with those taken previously.

If there is NO difference in ride heights, and the strips of masking tape are still ‘taut’ then no air leak is present. Please explain to the customer the long term storage or changing climate conditions would cause a drop in ride height which is normal. As soon as the vehicle is started, the compressor will level the vehicle automatically. No further action is required.

If there IS a difference in ride heights, and the strips of masking tape (1) have ‘sagged’ (shown in Figure 2), then refer to the following leak finding procedures below.

Figure 2

It should be noted that if these checks involve a claim through warranty then photographic evidence of the vehicle sagging and air leak should be included.

Always select " Jack mode" before raising the vehicle and exhausting the air from the suspension system. Refer to Elsapro. Repair Group 43.

Section 1 - Front suspension air spring fault finding

Before any other checks are made to the front air springs check to confirm the pipes are fully inserted and firmly connected within the brass fitting.

Air leakage may not be audible. A possible symptom of air leakage is excessive operation of the air pump located above the rear diffuser. If no air leakage is apparent at the pipe unions and there is excessive operation of the air pump compressor, there may be a damaged air supply pipe to an air spring.

With the air suspension fully charged, use leak detector spray or a mild soap solution to check the connections for leaks as shown in the accompanying table.

Place an X in the appropriate column next to each check.

Front air spring check points - Continental series *(pre 2018)* and Flying Spur

Check	Yes	No	Comments
Brass fitting to air spring (1) Brass intermediate connection (2) Air feed pipe connection (3) Top of air spring (4) Air spring gaiter condition (5) Air canister and canister to air spring (6 & 7) Bottom of the air spring (8) Top of the air spring (9). Within engine compartment, pull dust seal back to inspect!			
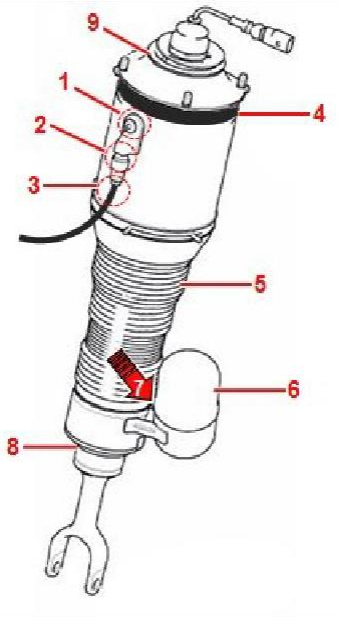			

Front air spring check points – Mulsanne

Check	Yes	No	Comments
Air connection to air spring (1) Upper air spring (2) Top of air spring (3) Air spring gaiter condition (4) Bottom of the air spring (5) 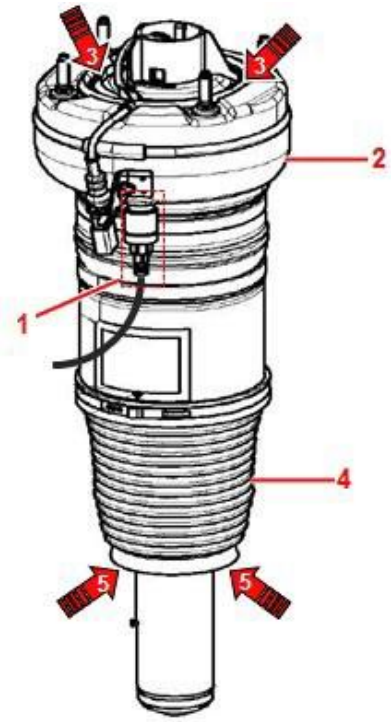 			

Front air spring check points – Bentayga

Check	Yes	No	Comments
Air connection to air spring (1) Top of air spring (2 & 3) Upper areas of air spring gaiter (4 & 6) Air spring upper gaiter condition (5) Lower areas of air spring gaiter (7 & 9) Air spring upper gaiter condition (8)			
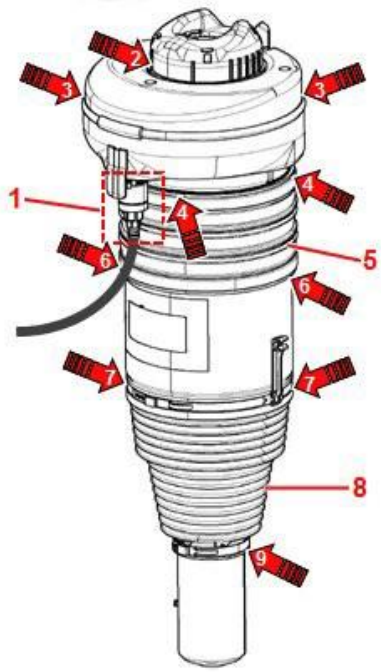			

Front air spring check points – New Continental GT

Check	Yes	No	Comments
Air connection to air spring (1) Sealing area of top nut (2) Top crimp area (3) Top of air spring (4) Air spring gaiter condition (5) Lower areas of air spring gaiter (6) Switching valves, solenoids and welds (7&8) 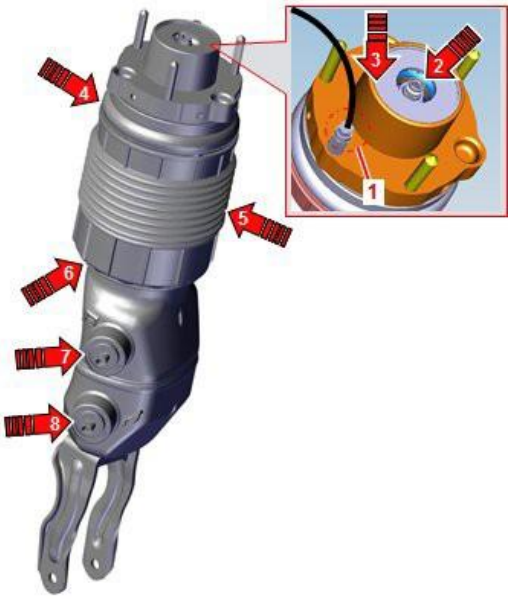			

Section 2 - Rear suspension air spring fault finding

Before any other checks are made to the rear air springs check to confirm the pipes are fully inserted and firmly connected within the brass fitting.

Air leakage may not be audible. A possible symptom of air leakage is excessive operation of the air pump located above the rear diffuser. If no air leakage is apparent at the pipe unions and there is excessive operation of the air pump compressor, there may be a damaged air supply pipe to an air spring.

With the air suspension fully charged, use leak detector spray or a mild soap solution to check the connections for leaks as shown in the accompanying table.

Place an X in the appropriate column next to each check.

Rear air spring check points - Continental series (pre 2018) and Flying Spur

Check	Yes	No	Comments
Brass fitting to air spring (1) Top of air spring (2 & 3) Air spring bellows (4) Air feed pipe connection (5) Air spring gaiter condition (6) Air canister and canister to air spring (7, 8 & 9) Electrical cable route for air escaping (10) 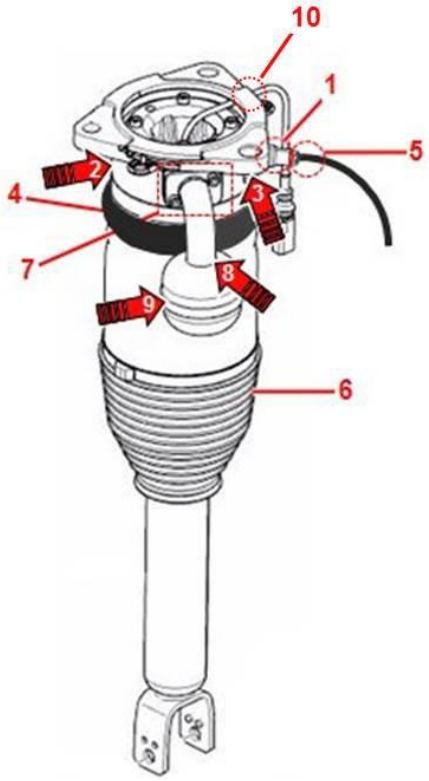			

Rear air spring check points – Mulsanne

Check	Yes	No	Comments
Air feed pipe connection (1) Top of air spring (2 & 3) Upper air spring bellows (4 & 5) Lower air spring bellows (6 & 7) Air spring gaiter condition (8 & 9)			
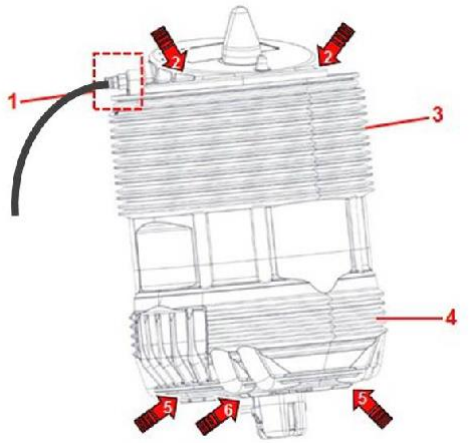			

Rear air spring check points – Bentayga

Check	Yes	No	Comments
Air feed pipe connection (1) Top of air spring (2) Air spring gaiter condition (3 & 4) Lower areas of air spring (5 & 6) 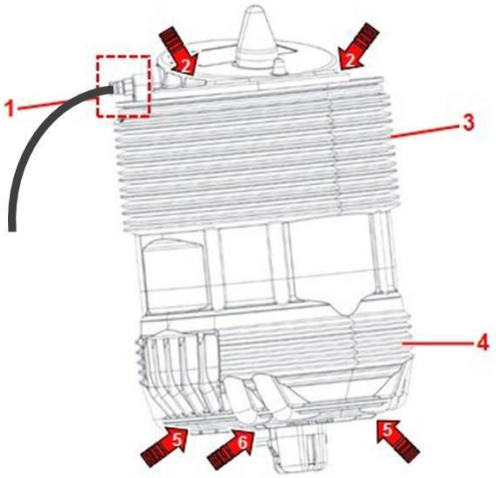 			

Rear air spring check points – New Continental GT

Check	Yes	No	Comments
Air feed pipe connection (1) Top of air spring (2) Air spring gaiter condition (3 & 4) Lower area of air spring (5) 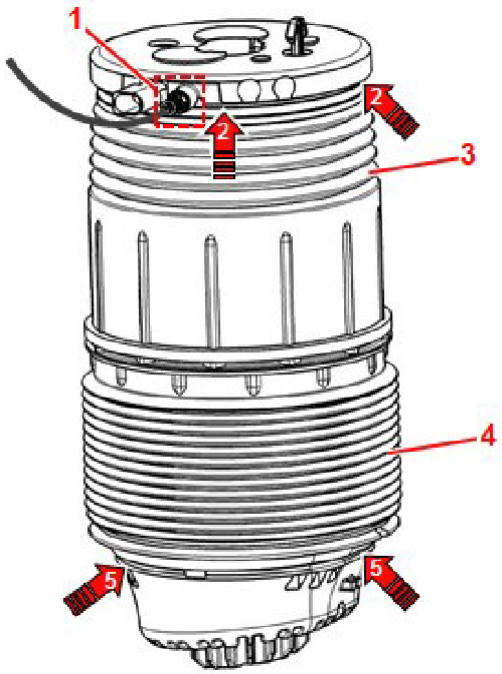 			

Section 3 - Air supply unit check points

Check for any air leaks on or around the air supply (compressor) unit.

Place an X in the appropriate column next to each check.

Air supply check points - Continental series (pre 2018) and Flying Spur

Check	Yes	No	Comments
Air pipe connections (1 to 6) 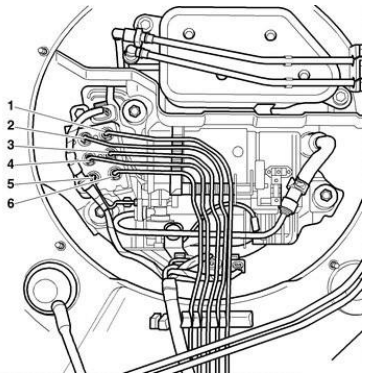 			

Air supply check points - Mulsanne

Check	Yes	No	Comments
Air pipe connections (1 to 6) 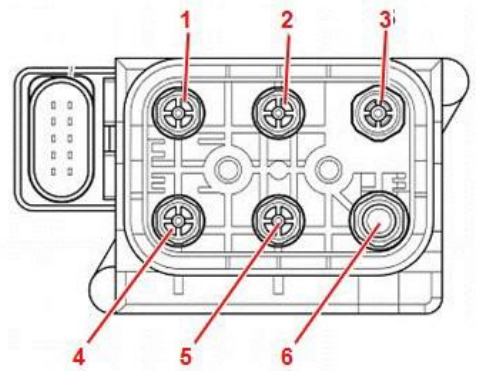			

Air supply check points – Bentayga

Check	Yes	No	Comments
Air pipe connections (arrows) 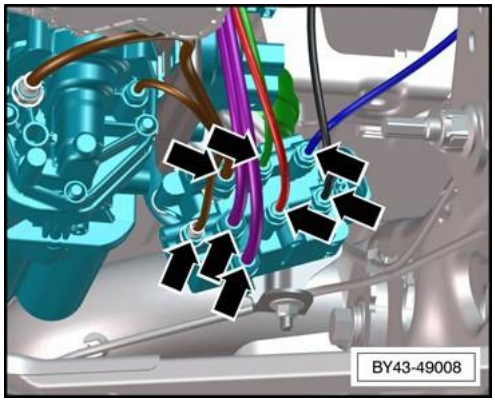			

Air supply check points – New Continental GT

Check	Yes	No	Comments
Air pipe connections (2 & 3) 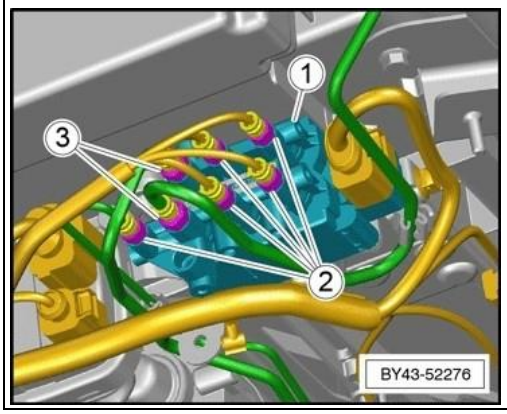			

Section 4 - Air reservoir unit check points

Check for any air leaks on or around the air reservoir.

Place an X in the appropriate column next to each check.

Air supply check points - Continental series (pre 2018) and Flying Spur

Check	Yes	No	Comments
Air pipe connection (arrow) Location - GT & Flying Spur: LH rear wheel arch Location – GTC: Behind backboard trim panel 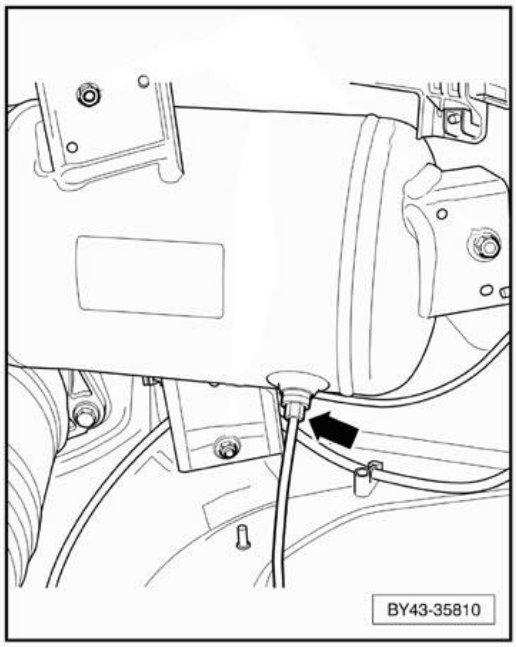 			

Air supply check points - Mulsanne

Check	Yes	No	Comments
Air pipe connection (arrow) Location – Boot floor 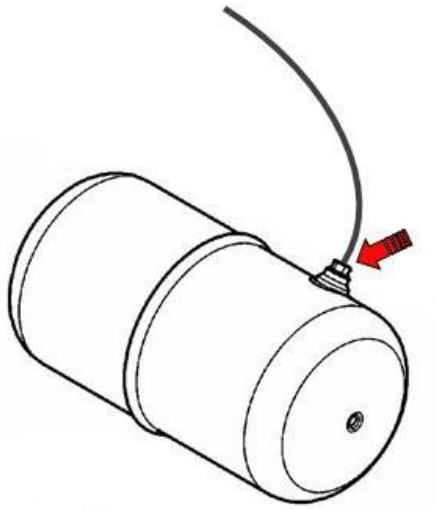			

Air supply check points - Bentayga

Check	Yes	No	Comments
Air pipe connections on the twin tanks (arrows) Location – Rear footwells beneath carpets 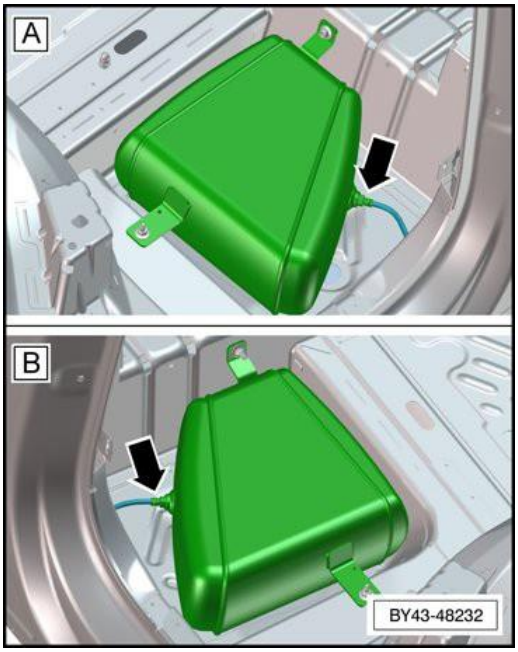 			

Air supply check points – New Continental GT

Check	Yes	No	Comments
Air pipe connection (2) Location – Underside of boot floor 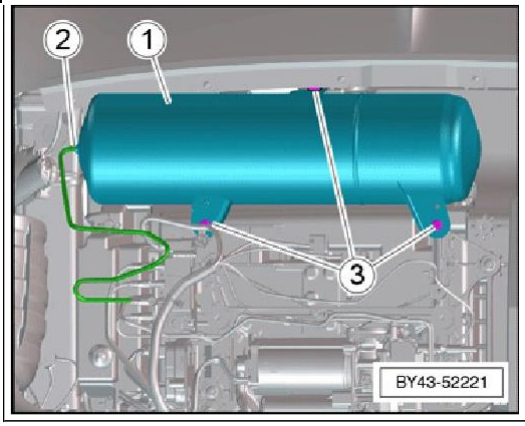 			

Section 5 - Air pipe repairs

If no evident air leak has been detected in the previous sections, refer to Elsapro, Repair Group 43, “Air suspension – To check”.

The “Air suspension leak tester VAS 751 001” is used to check the air spring struts, solenoid valve block, accumulators, compressors, air reservoirs and air pipes for leaks.

In the event of an air leak from the air pipe/brass fittings on the supply unit the brass fittings and internal olive can be replaced individually.

To repair an air pipe, refer to Elsapro, “Air Supply Pipe - To Repair” - Repair Group 43.

Using a “Vehicle Tester”, recharge the air system. Refer to Elsapro, “To discharge and charge” - Repair Groups 40 and 42.

Warranty accounting instructions

It should be noted that if checks involve a claim through warranty then photographic evidence of the vehicle sagging and air leak should be included with the DISS technical query where possible.

Pictures should include the following:

- Tape (1) applied before and after, showing the tape sagging. See Figure 3.
- All ride height measurements (A-A) before and after. See Figure 3.
- Soap solution bubbling at the point of air leak (where possible).

Figure 3