Revisions to this document are noted by a stripe in the left-hand margin

SUBJECT: Engine/Transmission Adaptation Requirements

VOCATIONS AFFECTED: H 40/50 EP™, 1000 Series™, 2000 Series™, 3000 Series™, 4000 Series™, TC10®, AT 500, MT 600, and HT 700 Series Transmissions

Transmission performance may be adversely affected by improper tolerances existing between engine to transmission mating components. The drive connection between the engine and transmission converter must transmit engine power, properly locate and pilot the torque converter, and aid in controlling the forward thrust of the converter in H 40/50 EP™, 1000 Series™, 2000 Series™, 3000 Series™, 4000 Series™, TC10®, AT 500, MT 600 and HT 700 models. Experience has shown these requirements can best be satisfied with a flexplate drive connection.

Vibration, converter section oil leaks, a worn front bushing or bearing, and/or a worn engine crankshaft thrust bearing are frequently the result of exceeding recommended tolerances in engine to transmission mating components. When these conditions are encountered, certain important measurements should be investigated before installing a repaired or new transmission.

These measurements are summarized below and are further detailed on the following pages. The Adaptation Requirements Checksheets specify the tolerance by transmission model. Figure 1 illustrates the typical tooling required for these measurements and Figures 2 through 11 explain the measurements in more detail and show examples of each measurement as it is being performed.

Summary of Measurements and Inspections:

Component or Subassembly	Required Inspections
Flywheel Housing	Bore Diameter Bore Eccentricity Face Squareness
Crankshaft Hub and/or Adapter	Converter Pilot Diameter Face Squareness Eccentricity
Flexplate	Check for Radial Cracks Check for Elongated Mounting Holes Check for Any Signs of Distress and/or Wear
Mounted Flexplate	Axial Location Flatness

Copyright © 2020 Allison Transmission, Inc. All Rights Reserved.

Please Note: Allison Transmission Service Information Letters are intended for use by professional, trained technicians, not for the "do-it-yourselfer." They are written to inform those technicians of conditions that may occur on some transmission models (or serial numbers ranges) or to provide information that could assist in the proper servicing of a specific Allison transmission. Properly trained technicians have the equipment, tools, safety instructions, and know-how to do a job properly and safely. If a condition is described, do not assume that the Service Information Letter applies to your transmission, or that your transmission has the condition described. Product evolution and information updates are inevitable. Please see your authorized Allison Transmission service dealer or distributor to understand if your particular transmission may benefit from the information contained within the Service Information Letter.

RO Number _____ **Technician Name/Number** _____

THE ADAPTATION REQUIREMENTS CHECKSHEET

	AT 500	MT 643/653	MT 644/654	HT 700	Ref. Fig.	Record Reading
FLYWHEEL HOUSING: BORE DIAMETER	16.125 $\frac{+0.005}{-0.000}$ in. (409.58 $\frac{+0.13}{-0.00}$ mm)	17.625 $\frac{+0.005}{-0.000}$ in. (447.68 $\frac{+0.13}{-0.00}$ mm)	17.625 $\frac{+0.005}{-0.000}$ in. (447.68 $\frac{+0.13}{-0.00}$ mm)	20.125 $\frac{+0.005}{-0.000}$ in. (511.18 $\frac{+0.13}{-0.00}$ mm)	2	_____
BORE ECCENTRICITY (Limits are for installed engines.)	0.020 in. T.I.R. (0.51 mm)	0.020 in. T.I.R.* (0.51 mm)	0.020 in. T.I.R. (0.51 mm)	0.020 in. T.I.R. (0.51 mm).	3	_____
FACE SQUARENESS (Limits are for installed engines.)	0.020 in. T.I.R. (0.51 mm)	0.020 in. T.I.R.* (0.51 mm)	0.020 in. T.I.R. (0.51 mm)	0.020 in. T.I.R. (0.51 mm).	4	_____

* For MT 600 Model transmissions prior to S/N 2410033458 which have not been updated with the converter pump bushing P/N 6881926 or converter pump hub roller bearing P/N 7451944, bore eccentricity and face squareness limits are 0.008 in. (0.20 mm) T.I.R.

CRANKSHAFT HUB AND/OR ADAPTOR: CONVERTER PILOT DIAMETER	1.703-1.705 in. (43.26-43.31 mm)	1.703-1.705 in. (43.26-43.31 mm)	1.703-1.705 in. (43.26-43.31 mm)	2.437-2.439 in. (61.90-61.95 mm)	5 & 6	_____
FACE SQUARENESS (T.I.R. per inch of diameter or T.I.R. per 25 mm of diameter)	0.0005 in. (0.013 mm)	0.0005 in. (0.013 mm)	0.0005 in. (0.013 mm)	0.0005 in. (0.013 mm)	7	_____
PILOT ECCENTRICITY (With respect to crankshaft center of rotation)	0.010 in. T.I.R. (0.25 mm)	0.010 in.* T.I.R. (0.25 mm)	0.010 in.* T.I.R. (0.25 mm)	0.005 in. T.I.R. (0.13 mm)	8	_____

* For MT 600 Model transmissions prior to S/N 2410033458 which have not been updated with the converter pump bushing P/N 6881926 or converter pump hub roller bearing P/N 7451944, pilot eccentricity is 0.005 in. (0.13 mm) T.I.R.

FLEXPLATE:						
CHECK FOR RADIAL CRACKS	For all models					
CHECK FOR ELONGATED MOUNTING HOLES	For all models					
CHECK FOR ANY SIGNS OF DISTRESS OR WEAR	For all models					
MOUNTED FLEXPLATE: CONVERTER AXIAL LOCATION: Prior to Oct. 1, 1984	1.600-1.740 in. (40.64-44.20 mm)	N/A	N/A	N/A		
CONVERTER AXIAL LOCATION: After Oct. 1, 1984	1.581-1.741 in. (40.16-44.22 mm)	2.854-3.014 in. (72.49-76.56 mm)	4.331-4.491 in. 110.01-114.07 mm)	3.413-3.592 in. (86.69-91.24 mm)	10	_____
FLATNESS (Area adjacent to each converter mounting hole)					9	_____
FORMED PLATES*	0.039 in. (0.99 mm)	0.039 in. (0.99 mm)	0.039 in. (0.99 mm)	N/A		
FLAT PLATES	0.157 in. (3.99 mm)	0.157 in. (3.99 mm)	0.157 in. (3.99 mm)	N/A		

* A formed flexplate will not be flat, but may have raised areas at the bolt holes and/or have offset bends in the plate.

NOTE: This form is to be completed and retained with the Repair Order records when performing Allison Transmission Warranty, ETC or Policy repairs.

4589691

Copyright © 2020 Allison Transmission, Inc. All Rights Reserved.

RO Number _____ **Technician Name/Number** _____

THE ADAPTATION REQUIREMENTS CHECKSHEET

	H 40/50 EP™	1000/2000 Series SAE No. 2 Housing	1000/2000 Series SAE No. 3 Housing	3000 Series	TC10 4000 Series	Ref. Fig.	Record Reading
FLYWHEEL HOUSING: BORE DIAMETER	17.625 $^{+0.005}_{-0.000}$ in.	17.625 $^{+0.005}_{-0.000}$ in.	16.125 $^{+0.005}_{-0.000}$ in.	17.625 $^{+0.005}_{-0.000}$ in.	20.125 $^{+0.005}_{-0.000}$ in.		
	(447.68 $^{+0.13}_{-0.00}$ mm)	(447.68 $^{+0.13}_{-0.00}$ mm)	(409.58 $^{+0.13}_{-0.00}$ mm)	(447.68 $^{+0.13}_{-0.00}$ mm)	(511.18 $^{+0.13}_{-0.00}$ mm)	2	_____
BORE ECCENTRICITY (Limits are for installed engines.)	0.020 in. T.I.R. (0.51 mm)	0.020 in. T.I.R. (0.51 mm)	0.020 in. T.I.R. (0.51 mm)	0.020 in. T.I.R. (0.51 mm)	0.020 in. T.I.R. (0.51 mm)	3	_____
FACE SQUARENESS (Limits are for installed engines.)	0.020 in. T.I.R. (0.51 mm)	0.020 in. T.I.R. (0.51 mm)	0.020 in. T.I.R. (0.51 mm)	0.020 in. T.I.R. (0.51 mm)	0.020 in. T.I.R. (0.51 mm)	4	_____
CRANKSHAFT HUB AND/OR ADAPTOR: CONVERTER PILOT DIAMETER	2.006-2.008 in. (50.94-50.99 mm)	1.703-1.705 in. (43.26-43.31 mm)	1.703-1.705 in. (43.26-43.31 mm)	2.006-2.008 in. (50.94-50.99 mm)	2.006-2.008 in. (50.94-50.99 mm)	5 & 6	_____
FACE SQUARENESS (T.I.R. per inch of diameter or T.I.R. per 25 mm of diameter)	0.005 in. (0.13 mm)	0.005 in. (0.13 mm)	0.005 in. (0.13 mm)	0.005 in. (0.13 mm)	0.005 in. (0.13 mm)	7	_____
PILOT ECCENTRICITY (With respect to crankshaft center of rotation)	0.005 in. T.I.R. (0.13 mm)	0.010 in. T.I.R. (0.25 mm)	0.010 in. T.I.R. (0.25 mm)	0.005 in. T.I.R. (0.13 mm)	0.005 in. T.I.R. (0.13 mm)	8	_____
FLEXPLATE: CHECK FOR RADIAL CRACKS	For all models						
CHECK FOR ELONGATED MOUNTING HOLES	For all models						
CHECK FOR ANY SIGNS OF DISTRESS OR WEAR	For all models						
MOUNTED FLEXPLATE: INPUT DAMPER AXIIAL LOCATION (AED™)	1.98-2.09 in. (50.36-53.06 mm)	N/A	N/A	N/A	N/A		
CONVERTER AXIAL LOCATION (EXCEPT AED™)	N/A	1.201-1.361 in. (30.50-34.56 mm)	1.581-1.741 in. (40.15-44.21 mm)	1.732-1.842 in. (44.0-46.8 mm)	1.943-1.983 in. (49.36-50.38 mm)	10	_____
FLATNESS (Area adjacent to each converter mounting hole)	N/A	0.030 in. T.I.R. (0.076 mm)*	0.030 in. T.I.R. (0.076 mm)*	N/A	N/A	9	_____
FLEXPLATE AXIAL LOCATION	N/A	N/A	N/A	See Table 1 for Nominal Value - Report Actual Value	See Table 1 for Nominal Value - Report Actual Value	11	_____

* When measured at 11.5 inch (292 mm) diameter.

NOTE: This form is to be completed and retained with the Repair Order records when performing Allison Transmission Warrenty, ETC or Policy repairs.

4738753

Copyright © 2020 Allison Transmission, Inc. All Rights Reserved.

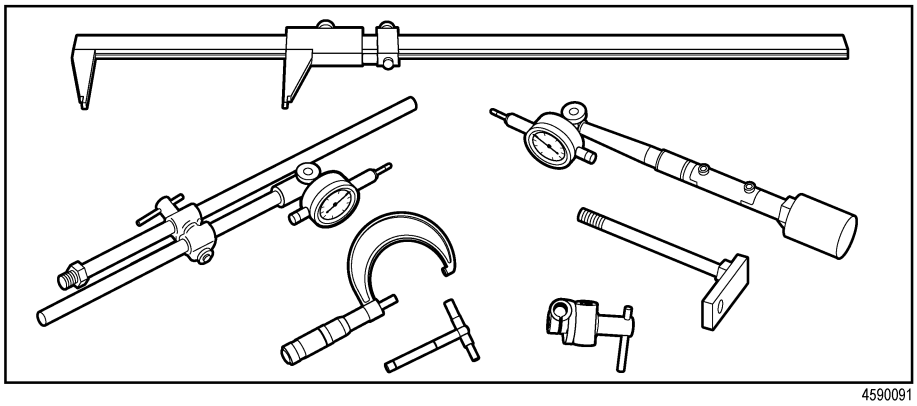

Figure 1. This is a typical set of tooling used to determine the adaptation requirements of an AT 500 series transmission.

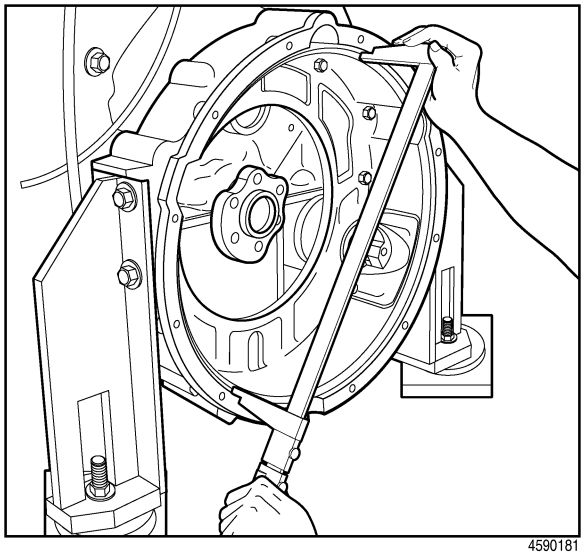

Figure 2. This illustrates measurement of the flywheel housing bore diameter using an inside caliper.

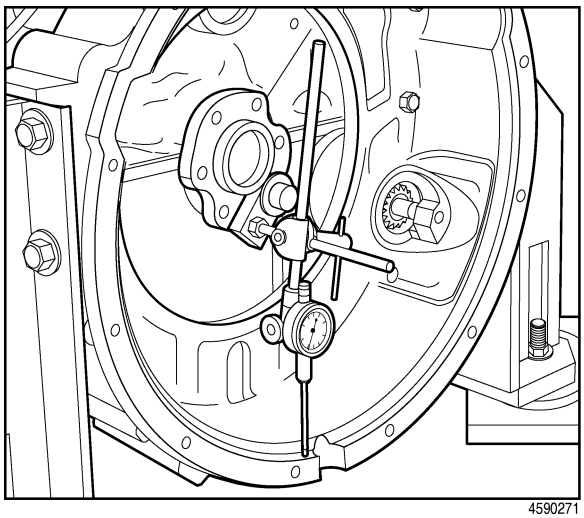

Figure 3. This illustrates measurement of the eccentricity of the flywheel housing bore using a dial indicator. Securely fasten the base of the dial indicator support extension to the crankshaft hub. Rotate the crank shaft so that the dial indicator will sweep the entire flywheel housing bore. Record the maximum and minimum readings. The difference in these readings should not be greater than the tolerances specified on the adaptation checksheet.

Copyright © 2020 Allison Transmission, Inc. All Rights Reserved.

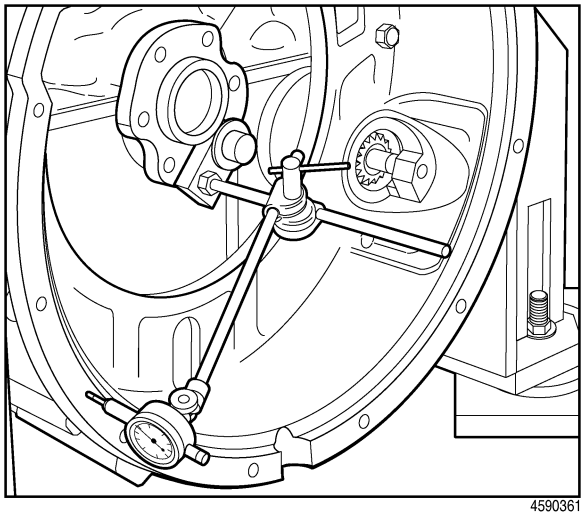

Figure 4. This illustrates measurement of the squareness of the flywheel housing face using a dial indicator. The dial indicator must be securely fastened to the crankshaft hub. While pressing the crankshaft rearward to remove all crankshaft end play, rotate the crankshaft so that the dial indicator sweeps the entire surface of the flywheel housing face. Record the maximum and minimum readings. The difference in these two readings should not be greater than the tolerance specified on the adaptation checksheet.

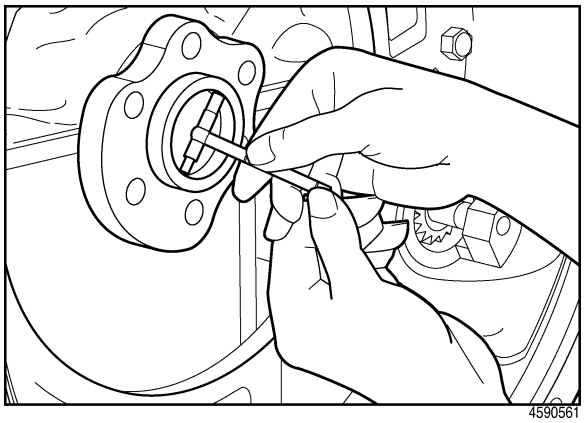

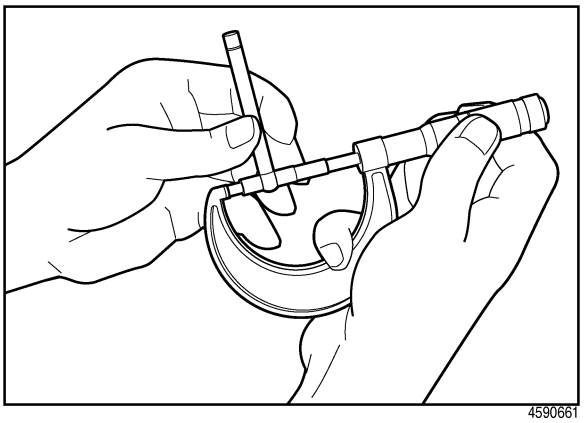

Figure 5 and 6. These illustrations demonstrate the use of an inside micrometer to measure the pilot diameter of the converter hub.

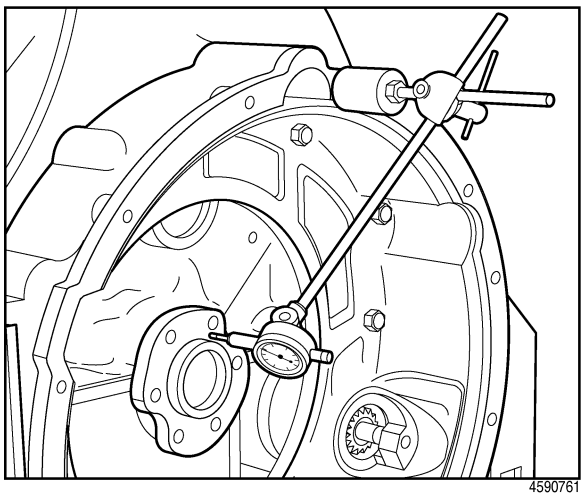

Figure 7. This illustrates measurement of the squareness of the crankshaft hub face. Securely fasten the base of the dial indicator to the flywheel housing and adjust the indicator to measure the outer edge of the crankshaft hub face. While pressing the crankshaft rearward to remove all crankshaft end play, rotate the crankshaft so the dial indicator sweeps the entire diameter of the crankshaft hub face. Record the maximum and minimum readings. The difference in these two readings should not be greater than the tolerance specified on the adaptation checksheet. Remember, this tolerance is given as T.I.R. per inch of diameter or T.I.R. per 25 mm of diameter, so multiply the tolerance from the checksheet by the diameter at which the reading is taken.

Copyright © 2020 Allison Transmission, Inc. All Rights Reserved.

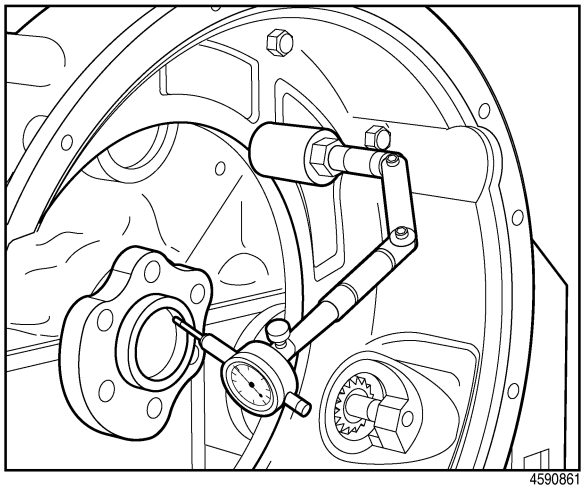

Figure 8. In this example, the crankshaft hub eccentricity is measured. With the dial indicator fastened to the flywheel housing, rotate the crankshaft so the indicator sweeps the entire inside diameter of the crankshaft hub. Note the maximum and minimum readings. The difference of these readings should not be greater than the tolerance specified on the adaptation checksheet.

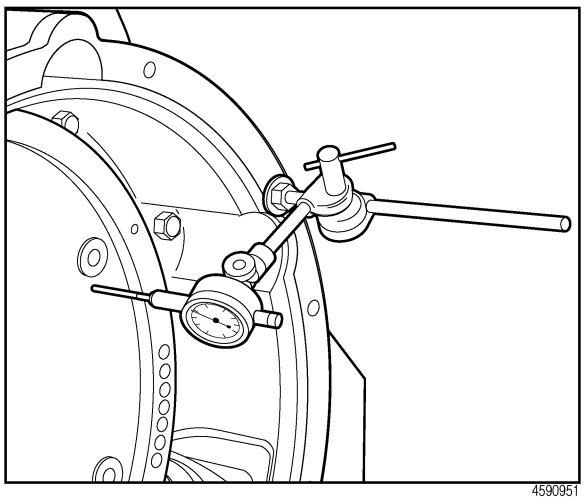

Figure 9. This illustrates measurement of the flexplate flatness. Fasten the dial indicator to the flywheel housing and measure only in an area adjacent to each converter mounting hole in the flexplate. If a two-piece flexplate is being checked, both pieces must be bolted together on the engine. Refer to adaptation checksheet for tolerance.

Copyright © 2020 Allison Transmission, Inc. All Rights Reserved.

1K2K #2 Housing Converter Axial Location

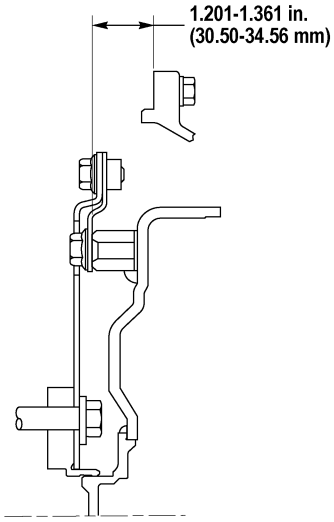

1K2K #3 Housing Converter Axial Location

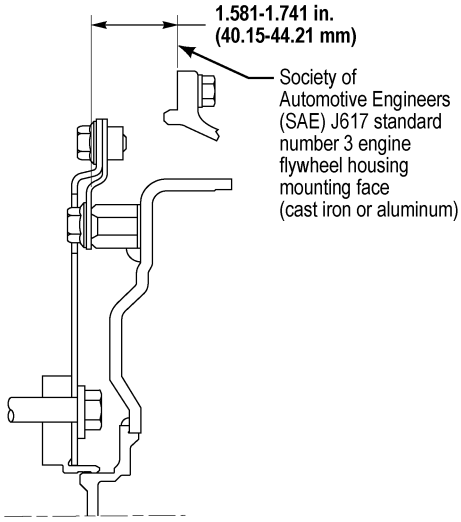

3K Converter Axial Location

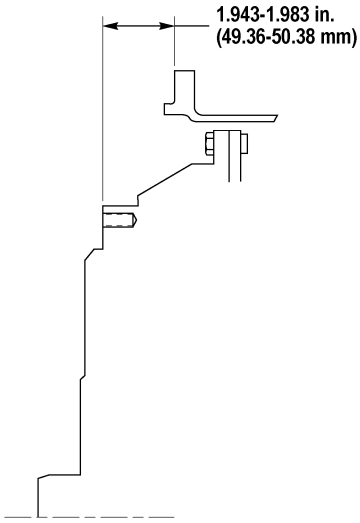

4K Converter Axial Location

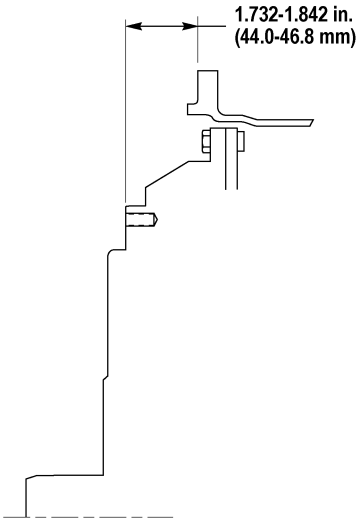

4738893

Copyright © 2020 Allison Transmission, Inc. All Rights Reserved.

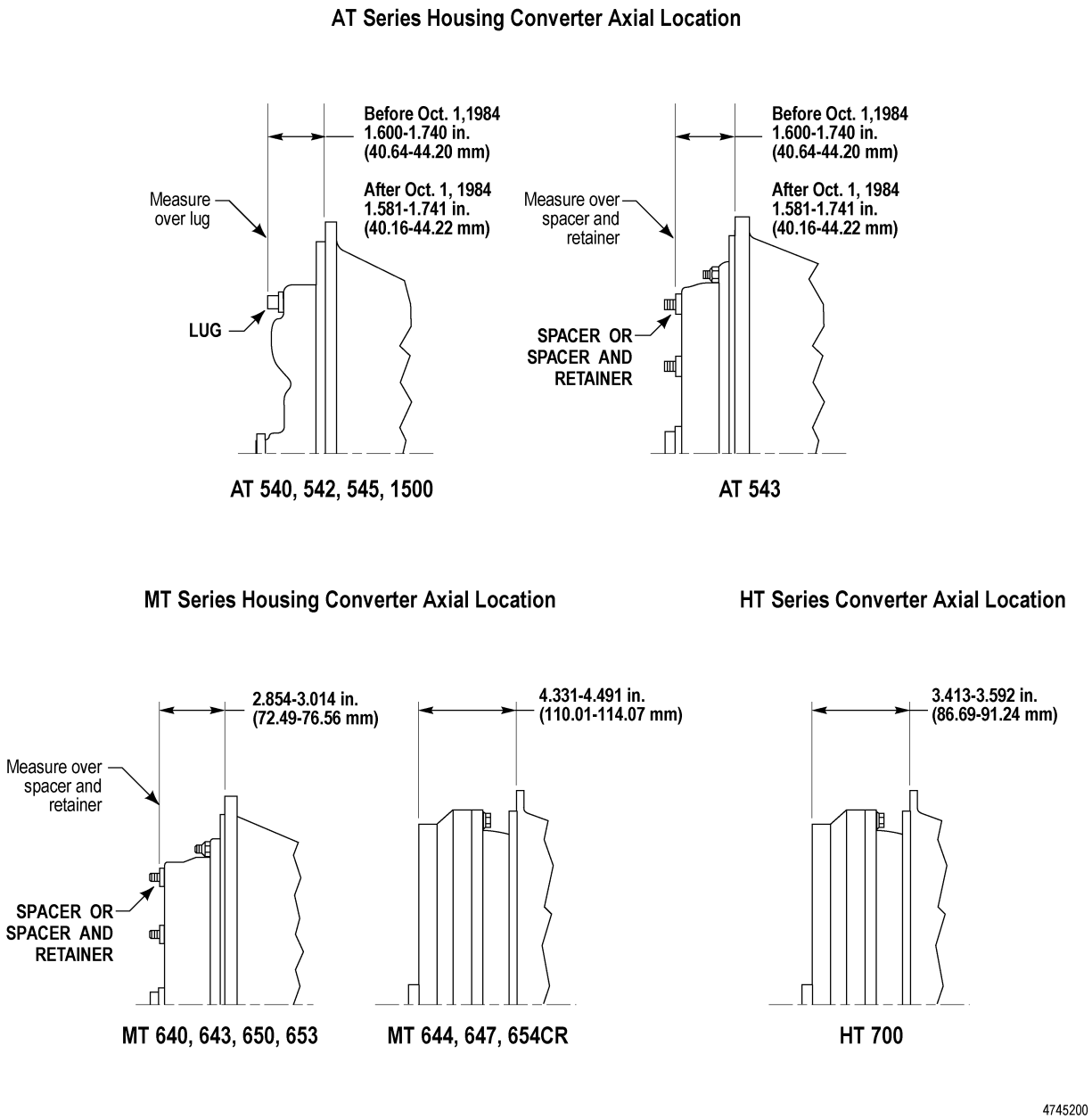

Figure 10. In this example, converter axial location is measured. While pressing the crankshaft rearward to remove all crankshaft end play, measure from the rear face of the flywheel housing to the rear face of the flexplate, adjacent to the converter mounting holes. The measurement should be within the tolerance specified on the adaptation checksheet.

Copyright © 2020 Allison Transmission, Inc. All Rights Reserved.

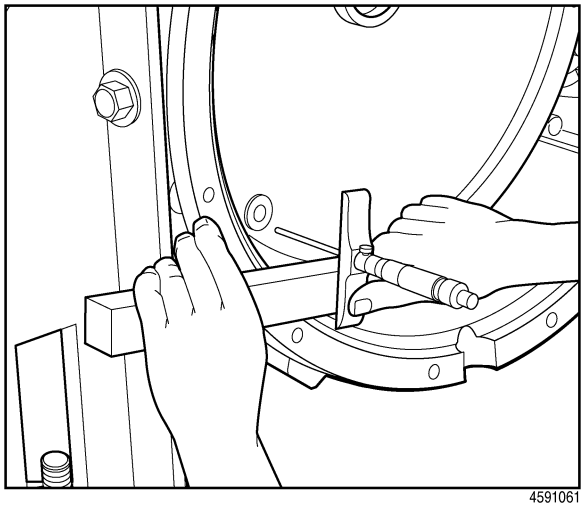

Figure 11. In this example, flexplate axial location is measured. While pressing the crankshaft rearward to remove all crankshaft end play, measure from the rear face of the flywheel housing to the rear face of the flexplate, adjacent to the converter mounting holes. The measurement should be within the tolerance specified on the adaptation checksheet.

Table 1 shows the Flexplate Adapter offsets for the 3000/4000 Product Family Transmissions. To determine the Flywheel Housing to Flexplate offset, you will use Table 1 and the information provided in the Adaptation Requirements Checksheets.

Copyright © 2020 Allison Transmission, Inc. All Rights Reserved.

Example for finding Flywheel Housing to Flexplate Nominal Offset.

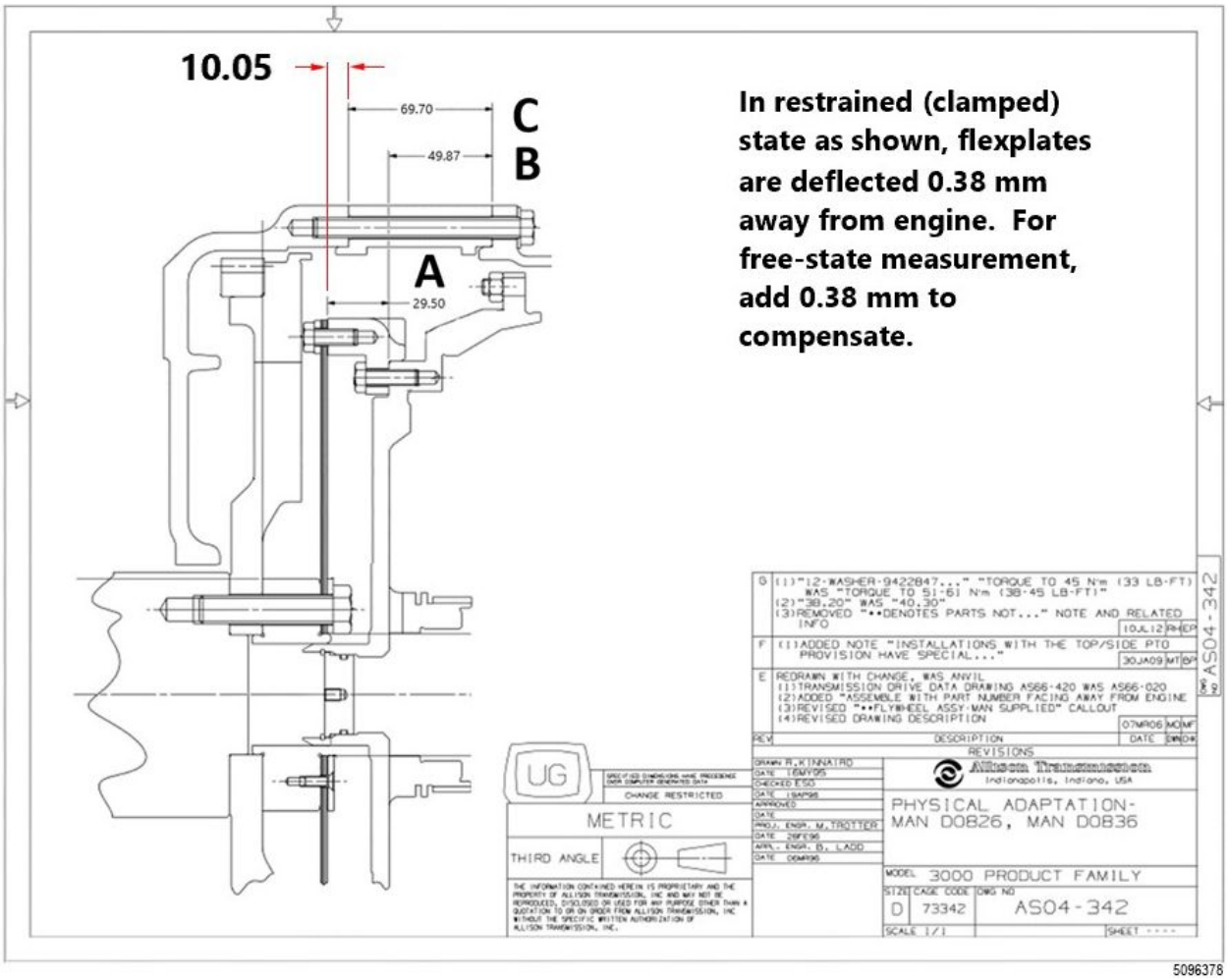

Figure 1. Example for finding Flywheel Housing to Flexplate Nominal Offset

3000 Series™ Transmission/ AS04 342-G (MAN D0826, MAN D0836)		←	→
NOT SHOWN	Flexplate deflection when mounted (0.38mm)		0.38
A	Flex Plate Adapter Offset		29.50
B	Torque Converter Cover to Converter Housing Flange face (3K)		49.87
C	Converter Housing Flange face to Engine Flywheel Housing face (adapter)	69.70	
	Sum	69.70	79.75
	Nominal Flywheel Hsg to Flexplate Offset (79.75 - 69.70)	**10.05**	

Copyright © 2020 Allison Transmission, Inc. All Rights Reserved.

Table 1. Flexplate Adapter Offsets

	A	B		C		
Flex Adapter P/N	**Flex Adapter Offset**	**TC Cover to Conv Hsg. Flange**	**Adapter Ring P/N**	**Adapter Ring Offset**	**Nominal Flywheel Hsg. Face to Flexplate Face mm (in)**	**Description**
29503524	30.20	49.87	None		80.45 (3.167)	AS04-291-K - Cummins B & C Series (B, ISB, BG, BLPG, C, ISC, ISL, CG, LG, & ILPG) 8/10 Pitch Ring Gear : 12 flexplate bolts, with starter spacer....NOTE: AS04-459 and AS04-474 reflect recommended designs for new vehicle builds.
29503525	25.09	49.87	None		75.34 (2.966)	AS04-293-H - Caterpillar 3116, 3116E, 3126, C7 : 12 flexplate bolts
29511625	25.09	49.87	None		75.34 (2.966)	AS04-297-J - Caterpillar 3116, 3116E, 3126, C7 : 6 flexplate bolts
29507915	31.98	49.87	None		82.23 (3.237)	AS04-298-C - Mercedes OM366LA (173 tooth ring gear)
29508368	25.45	49.87	None		75.7 (2.98)	AS04-299-E - Mercedes OM366LA (133 tooth ring gear)
29512130	30.20	49.87	None		80.45 (3.167)	AS04-300-K - Cummins C Series (C, ISC, ISL, CG, LG) 8/10 Pitch Ring Gear: 6 flexplate bolts w/ starter spacer....NOTE: AS04-459 and AS04-474 reflect recommended designs for new vehicle builds.
29512880	28.40	49.87	None		78.65 (3.096)	AS04-303-G - Detroit Series 40 (1994 & later); Navistar DT466, DT570, 530, MaxxForce DT9 & DT10; Perkins Peregrine
29512136	30.20	49.87	None		80.45 (3.167)	AS04-304-J - Cummins B Series (B, ISB, BG, BLPG) 10/12 Pitch Ring Gear : 6 flexplate bolts....NOTE: AS04-459 and AS04-474 reflect recommended designs for new vehicle builds.
29513053	34.38	49.87	23049392	0.00	84.63 (3.332)	AS04-312-H - Detroit V92, S50, S60 Series (SAE No. 1 Hsg./ No. 1 Ring Gear Position)
29511095	34.15	49.87	23049392	0.00	84.4 (3.323)	AS04-314-D - Detroit V92, S50, S60 Series (SAE No. 1 Housing / No. 2 Ring Gear Position)
29510822	47.66	49.87	None		97.91 (3.855)	AS04-315-G - Detroit V92, S50, S60 Series (Extended SAE No. 2 Housing)
29520757	50.13	49.87	None		100.38 (3.952)	AS04-318-D - Perkins Phaser (Extended SAE No. 2 Housing)
29511095	34.15	49.87	None		84.4 (3.323)	AS04-321-F - Detroit V92, S50, S60 Series (SAE No. 2 Housing)
29516147/ 29513023	36.00	49.87	29513023	42.00	44.25 (1.742)	AS04-323-F - Iveco Cursor 8 (F2B) - SAE No.1 Housing / No.1 Ring Gear Position
29522215	30.25	49.87	29524800	22.76	57.74 (2.273)	AS04-324-G - Mercedes OM900, MBE900 (SAE No. 2 Hsg. / Mercedes Flywheel)

Copyright © 2020 Allison Transmission, Inc. All Rights Reserved.

Table 1. Flexplate Adapter Offsets *(cont'd)*

	A	B		C		
Flex Adapter P/N	**Flex Adapter Offset**	**TC Cover to Conv Hsg. Flange**	**Adapter Ring P/N**	**Adapter Ring Offset**	**Nominal Flywheel Hsg. Face to Flexplate Face mm (in)**	**Description**
29507742	32.20	49.87	23049392	0.00	82.45 (3.246)	AS04-326-J - Caterpillar 3176, C9, C10, C11, C12, C13 (SAE No.1 Hsg. / No.1 Ring Gear Position)
29503524	30.20	49.87	None		80.45 (3.167)	AS04-328-F - Cummins B Series (B, ISB, BG, BLPG) 10/12 Pitch Ring Gear : 12 flexplate bolts....NOTE: AS04-459 and AS04-474 reflect recommended designs for new vehicle builds.
29509445	37.45	49.87	23049392	0.00	87.7 (3.453)	AS04-329-F - Cummins L10, M11, ISM: SAE No.1 Hsg./No.1 Ring Gear Pos. (10.85-in Starter Distance)
29507523	37.45	49.87	23049392	0.00	87.7 (3.453)	AS04-330-F - Cummins L10, M11, ISM: SAE No.1 Hsg./ No.2 Ring Gear Pos. (9.60-in Starter Distance)
29507523	37.45	49.87	None		87.7 (3.453)	AS04-331-F - Cummins L10, M11, ISM: SAE No.2 Hsg./No.2 Ring Gear Pos. (9.60-in Starter Distance)
29507963	29.50	49.87	DAF 0538047	52.40	27.35 (1.077)	AS04-332-B - DAF 620
29511988	37.60	49.87	6881378	22.76 (0.896")	65.09 (2.563)	AS04-334-E - DAF 8.65 (SAE No.1 Housing / No.1 Ring Gear Position)
29510932	27.73	49.87	None		77.98 (3.07)	AS04-335-F - Detroit 6V53
29509455	29.56	49.87	23049392	0.00	79.81 (3.142)	AS04-336-D - Detroit 6-71 (SAE No.1 Housing. / No.1 Ring Gear Position)
29513798	30.25	49.87	None		80.5 (3.169)	AS04-339-E - Iveco 8060
29507720	33.70	49.87	23049392	0.00	83.95 (3.305)	AS04-340-C - Iveco 8360 (SAE No.1 Housing / No.1 Ring Gear Position)
29522215	30.25	49.87	None		80.5 (3.169)	AS04-341-D - John Deere 6076 / 6081
29507963	29.50	49.87	MAN 81.30120-0053	69.70	10.05 (0.396)	AS04-342-G - MAN D0826, MAN D0836
29513017	42.00	49.87	OEM supplied	Undetermined	51.50 (2.028)	AS04-343-C - MAN D2366
29516147	36.00	49.87	OEM supplied	10.20	76.05 (2.994)	AS04-344-E - Mercedes OM400, MBE 4000
29512888	35.59	49.87	23049240	36.78	49.06 (1.931)	AS04-345-D - Hyundai 6D22, Mitsubishi 6D22 (SAE No.1 Hsg. / No.1 Ring Gear Position)
29514850	28.40	49.87	None		78.65 (3.096)	AS04-347-D - Navistar T444E
29506126	29.06	49.87	None		79.31 (3.122)	AS04-348-D - Perkins Phaser (SAE No. 2 Housing)

Copyright © 2020 Allison Transmission, Inc. All Rights Reserved.

Table 1. Flexplate Adapter Offsets *(cont'd)*

	A	B		C		
Flex Adapter P/N	**Flex Adapter Offset**	**TC Cover to Conv Hsg. Flange**	**Adapter Ring P/N**	**Adapter Ring Offset**	**Nominal Flywheel Hsg. Face to Flexplate Face mm (in)**	**Description**
29519135	35.60	49.87	6882685	22.76	63.09 (2.484)	AS04-349-B - RVI MID 060226 (6L) Euro II / Midliner
29507968	37.34	49.87	RVI 167019	Undetermined	Undetermined	AS04-350-C - RVI MID 062030 / 062045 (SAE No.1 Hsg / No.1 Ring Gear Position)
29509612	39.53	49.87	Scania 1332537	Undetermined	55.54 (2.187)	AS04-351-D - Scania DS9 / DS11
29507963	29.50	49.87	None		79.75 (3.14)	AS04-352-C - STEYR WD612
29511098	27.60	49.87	6881378	22.76 (0.896")	55.09 (2.169)	AS04-353-C - STEYR WD615 (SAE No.1 Housing / No.1 Ring Gear Position)
29513046	28.90	49.87	23047248	36.78	42.37 (1.668)	AS04-354-C - Valmet 612
29508368	25.45	49.87	None		75.7 (2.98)	AS04-355-C - Volvo VED6 (TD 61 / 63)- 6 Crankshaft Bolts
29508368	25.45	49.87	None		75.7 (2.98)	AS04-356-C - Volvo VED6 (TD 61 / 63)- 9 Crankshaft Bolts
29506249	50.38	49.87	Volvo 471 563	35.80	64.83 (2.552)	AS04-358-C - Volvo VE7 (35.8 mm Spacer)
29522215	30.25	49.87	None		80.5 (3.169)	AS04-383-E - John Deere 6068
29512148	29.20	49.87	6881378	22.76 (0.896")	56.69 (2.232)	AS04-384-H - Iveco 8460 (SAE No.1 Housing / No.1 Ring Gear Position)
29519135	35.60	49.87	29524800	22.76	63.09 (2.484)	AS04-386-D - RVI MID 060226 Euro II/III Midlum/Premium
29528327	42.00	49.87	OEM supplied	42.00	50.25 (1.978)	AS04-387-D - Daewoo/Doosan D2366, DE12, GE12 (SAE No.1 Housing / No.1 Ring Gear Position)
29511988	37.60	49.87	6881378	22.76 (0.896")	65.09 (2.563)	AS04-391-D - DAF 9.2 - 12mm Crankshaft Bolts
29516147	36.00	49.87	OEM 385 271 0751	Undetermined	Undetermined	AS04-397-D - Detroit Series 55
29536596	26.70	49.87	SK 133-1	Undetermined	Undetermined	AS04-402-E - Volvo D12
29559548	26.12	49.87	None		76.37 (3.007)	AS04-403-F - Mercedes OM900, Detroit Diesel DD8 (SAE No.2 Hsg., no spacer)
29522215	30.25	49.87	29524800	22.76	57.74 (2.273)	AS04-404-D - Mercedes OM900, MBE900 (SAE No. 2 Hsg. & Flywheel, w/ spacer)
29508368	25.45	49.87	ATE SK1333-1	Undetermined	76.90 (3.028)	AS04-405-D - Volvo D7 (Same Length Adapter)

Copyright © 2020 Allison Transmission, Inc. All Rights Reserved.

Table 1. Flexplate Adapter Offsets *(cont'd)*

	A	B		C		
Flex Adapter P/N	**Flex Adapter Offset**	**TC Cover to Conv Hsg. Flange**	**Adapter Ring P/N**	**Adapter Ring Offset**	**Nominal Flywheel Hsg. Face to Flexplate Face mm (in)**	**Description**
29511988	37.60	49.87	6881378	22.76 (0.896")	65.09 (2.563)	AS04-406-C - DAF 9.2 - 14mm Crankshaft Bolts
29537817	33.20	49.87	None		83.45 (3.285)	AS04-414-B - Iveco Tector (F4A)
29537970	31.25	49.87	None		81.5 (3.209)	AS04-415-D - Cummins ISB / DAF
29538153	25.68	49.87	None		75.93 (2.989)	AS04-421-E - Isuzu 7.2L and 7.8L (dim from converter housing flange face)
29538537	32.80	49.87	23049392	0.00	83.05 (3.27)	AS04-426-C - Deutz BF6M1015
29541089	29.15	49.87	29541093	22.76	56.64 (2.23)	AS04-432-B - MWM 6.10 TCA
29512880	28.40	49.87	None		78.65 (3.096)	AS04-438-B - Navistar 6.0L V8 (VT365 with Standard Flywheel Housing)
29541089	29.15	49.87	29541093	22.76	56.64 (2.23)	AS04-441-B - MWM 4.12 TCAE
29512880	28.40	49.87	None		78.65 (3.096)	AS04-449-D - Navistar Maxxforce 7
29542280	35.13	49.87	None		85.38 (3.361)	AS04-458-B - Renault Dxi7, Volvo MD7, Deutz 2013-4V
29512136	30.20	49.87	None		80.45 (3.167)	AS04-459-C - Cummins B & C Series (B, ISB, BG, BLPG, C, ISC, ISL, CG, LG, ISLG) 8/10 Pitch Ring Gear : 6 flexplate bolts, no starter spacer
29545622	26.00	49.87	None		76.25 (3.002)	AS04-460-E - Caterpillar C6.6
29545928	30.41	49.87	23049392	0.00	80.66 (3.176)	AS04-462-C - Navistar Maxxforce 11 & 13 - sheet 1 - Oct 2009 or later
29545928	30.41	49.87	23049392	0.00	80.66 (3.176)	AS04-462-C - Navistar Maxxforce 11 & 13 - sheet 2 - Prior to Oct 2009
29509612	39.53	49.87	Scania 1332537	35.50	54.28 (2.137)	AS04-465-C - Scania DC9 (8.9L), DC11 & DC12
29546716	30.78	49.87	29546717	29.00	52.03 (2.048)	AS04-466-E - Hyundai 08H
29503524	30.20	49.87	23049392	0.00	80.45 (3.167)	AS04-474-B - Cummins C Series with REPTO (C, ISC, ISL, CG, LG, & ILPG): SAE No. 1 Hsg, 8/10 Pitch Ring Gear, 12 flexplate bolts, w/ starter spacer
29549499	29.80	49.87	23049392	0.00	80.05 (3.152)	AS04-476-B - Detroit Diesel DD13 (Prior to August 2019)
29549662	26.57	49.87	23049392	0.00	76.82 (3.024)	AS04-477-A - Doosan DE12/GE12/GK12 Short SAE No.1 Flywheel Housing
29547113	28.00	49.87	None		78.25 (3.081)	AS04-478-A - Hino J08E

Copyright © 2020 Allison Transmission, Inc. All Rights Reserved.

Table 1. Flexplate Adapter Offsets *(cont'd)*

	A	B		C		
Flex Adapter P/N	**Flex Adapter Offset**	**TC Cover to Conv Hsg. Flange**	**Adapter Ring P/N**	**Adapter Ring Offset**	**Nominal Flywheel Hsg. Face to Flexplate Face mm (in)**	**Description**
29516147	36.00	49.87	29513023	42.00	44.25 (1.742)	AS04-479 - Iveco Cursor 9 (F2C)
29507963	29.50	49.87	OEM supplied	28.61	51.14 (2.013)	AS04-480-A - UD Trucks L6
29542280	35.13	49.87	None		85.38 (3.361)	AS04-484-A - Renault Dxi7, Volvo MD7, Deutz 2013-4V EURO 5
29551171	38.10	49.87	29555286	0.00	88.35 (3.478)	AS04-486-C - Ashok Leyland, AL Neptune
29545928	30.41	49.87	29551866	21.72	58.94 (2.32)	AS04-492-C - Mack / Volvo 11L
29552454	33.61	49.87	23049392	0.00	83.86 (3.302)	AS04-500-B - Cummins ISX 11.9
29541089	29.15	49.87	29541093	22.76	56.64 (2.23)	AS04-503-B - MWM 6.12 TCA EURO V
29538537	32.80	49.87	None		83.05 (3.27)	AS04-504-A - Ford V10
29507523	37.45	49.87	29551107	7.035	80.665 (3.176)	AS04-507-A - DAF/PACCAR MX11, EURO6
29507963	29.50	49.87	29552880	26.10	53.65 (2.112)	AS04-510 - Man D0826, MAN D0836 with 26.10 FW Housing Spacer Width
29554108	23.47	49.87	OEM supplied	60.27	13.45 (0.53)	AS04-519-A - Hyundai Q-CNG
29509612	39.53	49.87	Scania 1332537	35.50	54.28 (2.137)	AS04-520 - Scania DC9 (9.3L) & D13
29542280	35.13	49.87	None		85.38 (3.361)	AS04-524-A - Volvo/Renault MDE8
29538537	32.80	49.87	None		83.05 (3.27)	AS04-525 - PSI 8.8L
29549945	31.20	49.87	29549944	63.25	18.2 (0.717)	AS04-534 - AL H Series 6CL 3K
29555318	40.06	49.87	23049240	36.78	53.53 (2.107)	AS04-537 - MAN D20/D26
29559393	31.20	49.87	29558513	20.00	61.45 (2.419)	AS04-560 - Hino, A09C
29555318	40.06	49.87	23049240	36.78	53.53 (2.107)	AS04-573 - YMZ, 534/536 SAE No.1 - 3K
29549499	29.80	49.87	23049392	0.00	80.05 (3.152)	AS04-581 - Detroit Diesel, DD13 (After August 2019)
29513007	39.21	45.40	None		84.99 (3.346)	AS04-313-E - Detroit "50, "60", and "92" Series
29507783	37.04	45.40	None		82.82 (3.261)	AS04-360-J - Caterpillar 3176, C9, C10, C11, C12, C13
29511877	34.52	45.40	CAT 9L2778	14.53	65.77 (2.589)	AS04-361-B - Caterpillar 3306

Copyright © 2020 Allison Transmission, Inc. All Rights Reserved.

Table 1. Flexplate Adapter Offsets *(cont'd)*

	A	B		C		
Flex Adapter P/N	**Flex Adapter Offset**	**TC Cover to Conv Hsg. Flange**	**Adapter Ring P/N**	**Adapter Ring Offset**	**Nominal Flywheel Hsg. Face to Flexplate Face mm (in)**	**Description**
29540979	41.74	45.40	None		87.52 (3.446)	AS04-362-H - Caterpillar 3406 / 3408, C15, C16, C17, C18
29514022	35.05	45.40	None		80.83 (3.182)	AS04-363-H - Cummins C Series (C, ISC, ISL, CG, LG) Without REPTO
29524135	42.25	45.40	None		88.03 (3.466)	AS04-364-F - Cummins L10, M11, ISM: SAE No. 2 Ring Gear Position (9.60-in Starter Distance)
29513207	42.25	45.40	None		88.03 (3.466)	AS04-365-D - Cummins L10, M11, ISM: SAE No. 1 Ring Gear Position (10.85-in Starter Distance)
29505968	37.70	45.40	None		83.48 (3.287)	AS04-366-C - Cummins "N" Series (SAE No. 2 Ring Gear Position)
29511992	36.87	45.40	29511994	20.00	62.65 (2.467)	AS04-367-B - DAF 865
29509903	34.43	45.40	None		80.21 (3.158)	AS04-368-B - Detroit 6-71
29522205	27.95	45.40	None		73.73 (2.903)	AS04-369-A - Iveco 8460
29509905	44.90	45.40	None		90.68 (3.57)	AS04-370-C - Mack E6 / E7 Series
29506060	34.44	45.40	None		80.22 (3.158)	AS04-371-C - Mack EM9 Series
29512103	41.74	45.40	Mercedes 4040150108	50.00	37.52 (1.477)	AS04-372-B - Mercedes OM400, MBE4000 - With Longitudinal Spacer
29514831	30.62	45.40	None		76.4 (3.008)	AS04-373-D - Mercedes OM400, MBE4000 - No Longitudinal Spacer
29510482	35.59	45.40	29523577	31.95	49.42 (1.946)	AS04-374-C - Mitsubishi 6D40
29523110	33.24	45.40	None		79.02 (3.111)	AS04-376-E - Detroit 40 Series (8.7 L), Perkins Peregrine, Navistar NGD (SAE No. 2 Ring Gear Position)
29520550	31.17	45.40	None		76.95 (3.03)	AS04-377-A - RVI MIDR 062030 / 062045
29512138	40.81	45.40	Scania 1368587	31.95	54.64 (2.151)	AS04-378-C - Scania DS-9, DS-11
29537246	38.44	45.40	29523577	31.95	52.27 (2.058)	AS04-379-B - Volvo TD102
29516984	51.47	45.40	29523577	31.95	65.3 (2.571)	AS04-380-B - Volvo VE7 (9 crankshaft bolts)
29537246	38.44	45.40	29523577	31.95	52.27 (2.058)	AS04-381-C - Volvo D12 - With Flywheel Housing Spacer
29505968	37.70	45.40	None		83.48 (3.287)	AS04-382-C - Deutz BF6M1015, TCD2015, and TCD 16.0
29527582	41.75	45.40	29511994	19.99	67.54 (2.659)	AS04-385-C - Iveco 8210 Without Mulitpower PTO

Copyright © 2020 Allison Transmission, Inc. All Rights Reserved.

Table 1. Flexplate Adapter Offsets *(cont'd)*

	A	B		C		
Flex Adapter P/N	**Flex Adapter Offset**	**TC Cover to Conv Hsg. Flange**	**Adapter Ring P/N**	**Adapter Ring Offset**	**Nominal Flywheel Hsg. Face to Flexplate Face mm (in)**	**Description**
29512138	40.81	45.40	29545220	31.95	54.64 (2.151)	AS04-389-E - Scania DC9 (8.9L), DC11, DC12 and DC16 (15.9L)
29527582	41.75	45.40	OEM supplied	45.00	42.53 (1.674)	AS04-394-D - Iveco, 8280, Cursor 11, Cursor 13
29535240	31.50	45.40	None		77.28 (3.043)	AS04-400-B - Volvo D12
29535602	33.50	45.40	None		79.28 (3.121)	AS04-401-C - John Deere 6105 / 6125
29535983	29.95	45.40	None		75.73 (2.981)	AS04-407-C - Mack E7 (V-MAC II, V-MAC III)
29537246	38.44	45.40	None		84.22 (3.316)	AS04-408-G - Cummins ISX, ISX15, ISX11.9, QSX, Signature Series
29527582	41.75	45.40	29511994	19.99	67.54 (2.659)	AS04-423-B - Iveco 8210 with Multipower PTO
29540131	39.50	45.40	None		85.28 (3.357)	AS04-430-C - Cummins C Series (C, ISC, ISL, CG, LG) With REPTO
29540482	35.12	45.40	None		80.9 (3.185)	AS04-431-A - John Deere 6081
29537246	38.44	45.40	23049157	13.71	70.51 (2.776)	AS04-445-B - Volvo MD11 / Mack MP7 - With 13mm Flywheel Housing Spacer
29537246	38.44	45.40	None		84.22 (3.316)	AS04-455-A - Volvo MD11 / Mack MP7 - No Flywheel Housing Spacer
29537246	38.44	45.40	Volvo 20788933	13.00	71.22 (2.804)	AS04-456-B - Volvo D13/D16; Mack MP8/MP10
29545926	35.25	45.40	None		81.03 (3.19)	AS04-461-B - Navistar Maxxforce 11 & 13 - sheet 1 - Oct 2009 or later
29545926	35.25	45.40	None		81.03 (3.19)	AS04-461-B - Navistar Maxxforce 11 & 13 - sheet 2 - Prior to Oct 2009
29537246	38.44	45.40	Volvo 20974780	Undetermined	Undetermined	AS04-467 - Volvo MD11 / Mack MP7 - With 25mm Flywheel Housing Spacer
29537246	38.44	45.40	None		84.22 (3.316)	AS04-470-B - PACCAR MX13, EPA 2007 & 2010
29512138	40.81	45.40	29545220	31.95	54.64 (2.151)	AS04-471-A - Scania DC9 (9.3L), DC13, DC16 (16.4L)
29547912	34.61	45.40	None		80.39 (3.165)	AS04-473-B - Detroit Diesel DD13, DD15, and DD16 (Prior to August 2019)
29537246	38.44	45.40	None		84.22 (3.316)	AS04-481-A - Renault DXI 11/Kerax
29550993	31.40	45.40	None		77.18 (3.039)	AS04-482-A - Doosan GK 12TI
29522205	27.95	45.40	29510478	31.95	41.78 (1.645)	AS04-488-A - Doosan DL 08

Copyright © 2020 Allison Transmission, Inc. All Rights Reserved.

Table 1. Flexplate Adapter Offsets *(cont'd)*

	A	B		C		
Flex Adapter P/N	**Flex Adapter Offset**	**TC Cover to Conv Hsg. Flange**	**Adapter Ring P/N**	**Adapter Ring Offset**	**Nominal Flywheel Hsg. Face to Flexplate Face mm (in)**	**Description**
29556137	42.94	45.40	None		88.72 (3.493)	AS04-490 - Ashok Leyland, AL Neptune
29547740	39.93	45.40	None		85.71 (3.374)	AS04-491 - MAN D2868
29514831	30.62	45.40	29557333	19.99	56.41 (2.221)	AS04-495-B - Doosan DV11
29552127	38.58	45.40	29510478	31.95	52.41 (2.063)	AS04-496-B - Hyundai 08H
29511992	36.87	45.40	29511994	20.00	62.65 (2.467)	AS04-506 - KAMAZ 740, 20 mm Spacer
29545926	35.25	45.40	None		81.03 (3.19)	AS04-508-B - PACCAR MX11, EURO6 & EPA 2013
29547912	34.61	45.40	29556432	63.20	17.19 (0.677)	AS04-526-A - MTU 6R1100, 6R1300, and 6R1500 with Spacer
29553534	35.05	45.40	None		80.83 (3.182)	AS04-529 - Cummins ISLE SAE 1 4K
29537246	38.44	45.40	Builder supplied	39.61	44.61 (1.756)	AS04-535 - Iveco, Cursor 9
29545926	35.25	45.40	None		81.03 (3.19)	AS04-536 - PACCAR MX13, EURO 6 & EPA 2013
29556618	40.06	45.40	29545220	31.95	53.89 (2.122)	AS04-538-A - MAN D20/D26
29557095	35.48	45.40	29557096	77.00	4.26 (0.168)	AS04-542 - Hyundai, Powertek Engine
29558082	27.25	45.40	None		73.03 (2.875)	AS04-551 - Navistar N13
29556118	40.06	45.40	29557391	25.00	60.84 (2.395)	AS04-557 - Iveco C13
29537246	38.44	45.40	Volvo 20788933	13.00	71.22 (2.804)	AS04-558-A - Volvo Penta D13
29537246	38.44	45.40	29559603	43.54	40.68 (1.602)	AS04-561 - Cummins QSG 12
29559657	34.06	45.40	None		79.84 (3.143)	AS04-562 - Hydrocar EFP-1 Sandwich PTO
29558082	27.25	45.40	29545220	31.95	41.08 (1.617)	AS04-563 - MAN D26 - 2019
29547912	34.61	45.40	29556432	63.20	17.19 (0.677)	AS04-565 - Mercedes OM473LA Euro6
29547912	34.61	45.40	None		80.39 (3.165)	AS04-566-B - MTU 6R1100, 6R1300 and 6R1500; Detroit Diesel DD13, DD15, and DD16 (After August 2019)
29556618	40.06	45.40	29545220	31.95	53.89 (2.122)	AS04-574 - YMZ, 534/536 SAE No.1 - 4K
29505968	37.70	45.40	None		83.48 (3.287)	AS04-575 - KAMAZ 910 Engine

Copyright © 2020 Allison Transmission, Inc. All Rights Reserved.