SS 1034607 WST 4700 In Cab Floor Raceway Cover Corrosion

Concern:

Some Western Star 4700 trucks experience rust through of the steel raceway covers located on the cab floor. This is typically seen in applications where the truck is run in environments where harsh chemicals are used such as salt in snowplow applications.

Applicable Vehicles:

WST 4700 Models

Solution:

Replace raceway with new stainless steel option.

Part numbers: A18-71264-004/-005
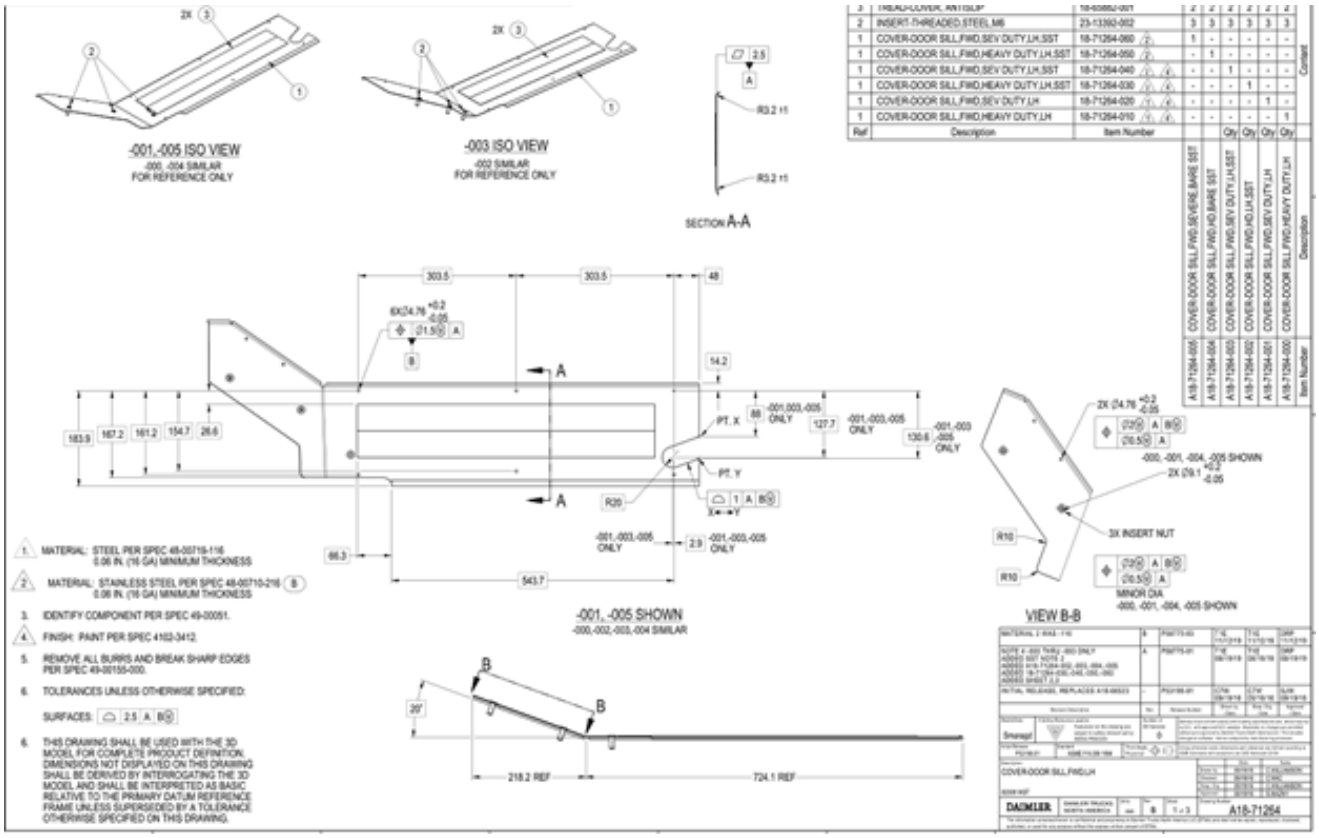
Note: As of 2/3/2020 the stainless covers will be offered as an option in the truck ordering process.