December 7, 2019 Version 3

Warranty Extension: Daytime Running Lights LEDs

Supersedes 19-042, dated April 16, 2019 to revise the information highlighted in yellow

AFFECTED VEHICLES

Year	Model	Trim	VIN Range
2016-17	Accord	ALL	Check the iN VIN status for eligibility.
2017	Accord Hybrid	ALL	Check the iN VIN status for eligibility.

REVISION SUMMARY

- Under WARRANTY CLAIM INFORMATION, a failed part number was updated.
- Under REPAIR PROCEDURE, an image was updated.

BACKGROUND

Heat from the daytime running light (DRL) LEDs may damage the DRL lens. If the lens is damaged, it may appear that some of the DRL LEDs are not working. American Honda is extending the warranty on the DRL LEDs to 10 years with unlimited mileage from the original date of purchase.

This warranty extension will not apply to any vehicle that has ever been declared a total loss or sold for salvage by a financial institution or insurer, or has a branded or similar title under any state's law.

CUSTOMER NOTIFICATION

Owners of affected vehicles will be sent a notification of this campaign.

Do an iN VIN status inquiry to make sure the vehicle is shown as eligible.

CORRECTIVE ACTION

Replace the affected headlight(s) with the failed DRL lens.

CUSTOMER INFORMATION: The information in this bulletin is intended for use only by skilled technicians who have the proper tools, equipment, and training to correctly and safely maintain your vehicle. These procedures should not be attempted by "do-it-yourselfers," and you should not assume this bulletin applies to your vehicle, or that your vehicle has the condition described. To determine whether this information applies, contact an authorized Honda automobile dealer.

© 2019 American Honda Motor Co., Inc. — All Rights Reserved

PARTS INFORMATION

NOTE

To make sure the correct part is installed on the vehicle, enter the VIN in the parts catalog when looking up the applicable part.

2016 2-Door: EX, EX with Honda Sensing, EX-L, EX-L with Navigation and Honda Sensing, EX-L V6, EX-L V6 with Navigation and Honda Sensing

Part Name	Part Number	Quantity
Right Headlight	33100-T3L-A61	1
Left Headlight	33150-T3L-A61	1

2016 2-Door: Touring

Part Name	Part Number	Quantity
Right Headlight	33100-T3L-A71	1
Left Headlight	33150-T3L-A71	1

2016-17 4-Door: SE, Sport, Sport Sensing, EX, EX-L, EX-L with Navigation and Honda Sensing, EX-L V6, EX-L V6 with Navigation and Honda Sensing

Part Name	Part Number	Quantity
Right Headlight	33100-T2A-A81	1
Left Headlight	33150-T2A-A81	1

2016-17 4-Door: Touring

Part Name	Part Number	Quantity
Right Headlight	33100-T2A-A32	1
Left Headlight	33150-T2A-A32	1

2017 2-Door: EX, EX with Honda Sensing, EX-L, EX-L with Navigation and Honda Sensing, EX-L V6, EX-L V6 with Navigation and Honda Sensing

Part Name	Part Number	Quantity
Right Headlight	33100-T3L-A31 33100-T3L-A61	1
Left Headlight	33150-T3L-A31 33150-T3L-A61	1

2017 2-Door: Touring

Part Name	Part Number	Quantity
Right Headlight	33100-T3L-A51 33100-T3L-A71	1
Left Headlight	33150-T3L-A51 33150-T3L-A71	1

2017 Accord Hybrid: Base and EX-L

Part Name	Part Number	Quantity
Right Headlight	33100-T2A-A91	1
Left Headlight	33150-T2A-A91	1

2017 Accord Hybrid: Touring

Part Name	Part Number	Quantity
Right Headlight	33100-T2A-A42	1
Left Headlight	33150-T2A-A42	1

WARRANTY CLAIM INFORMATION

Operation Number	Description	Flat Rate Time	Defect Code	Symptom Code	Failed Part Number
7121M2	Replace the **left** headlight.	0.7 hr	6H100	U4H00	33150-T2A-A81
7121M3	Replace the **right** headlight.	0.7 hr	6H100	U4H00	33100-T2A-A81
7121M4	Replace **both** of the headlights.	0.9 hr	6H100	U4H00	33100-T2A-A81

Skill Level: Repair Technician

REPAIR PROCEDURE

1. Remove the front bumper.

   1.1. Remove the screws and the clips.

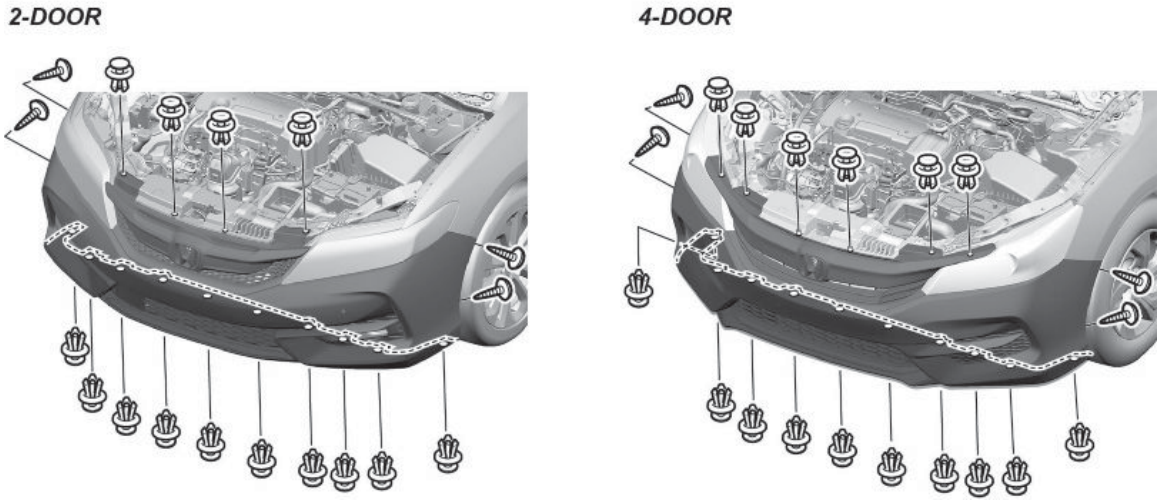

   1.2. Pull out the front bumper at the wheel arch area to release the hooks.

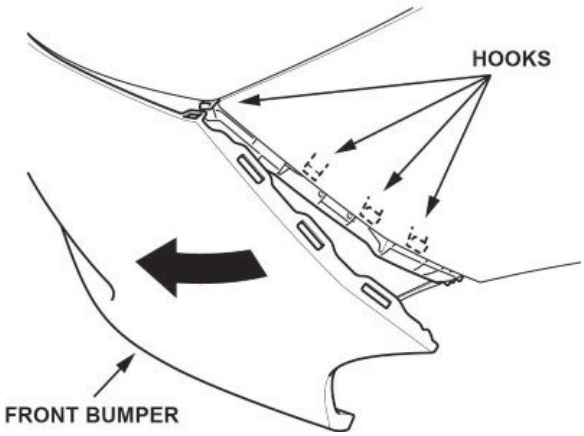

   1.3. With the help of an assistant, while pulling the front bumper from the wheel arch area, release the hooks on the upper beam.

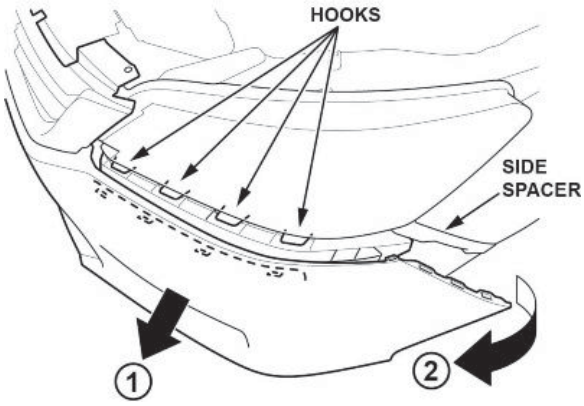

1.4. Disconnect the connectors, then remove the bumper.

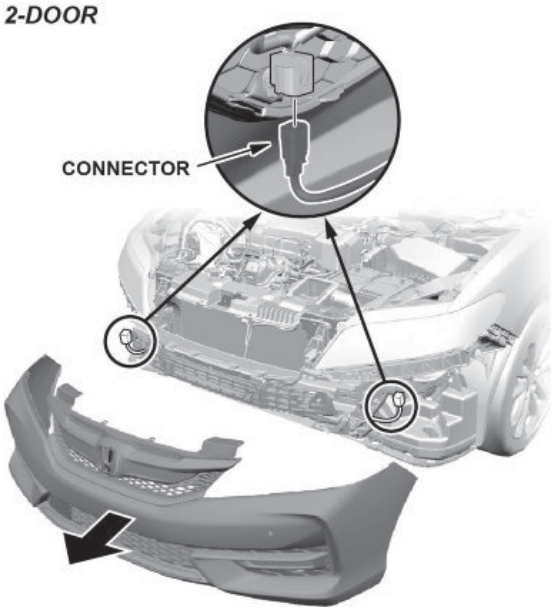

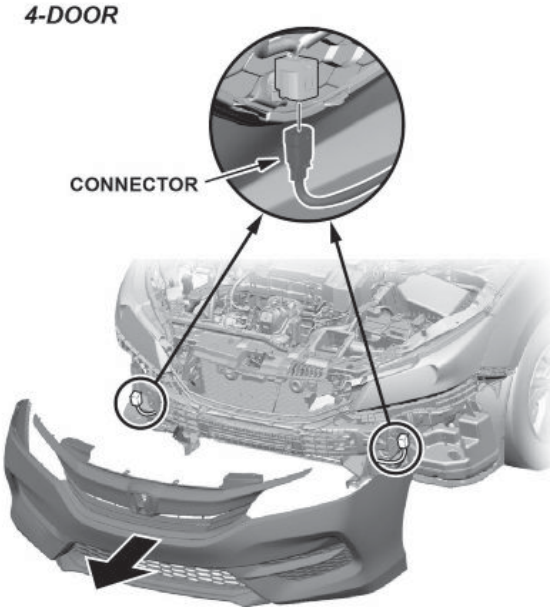

2. Remove the affected headlight(s).

NOTE

Remove the headlight and the corner upper beam as an assembly.

2.1. Remove the bolts.
Revised image.

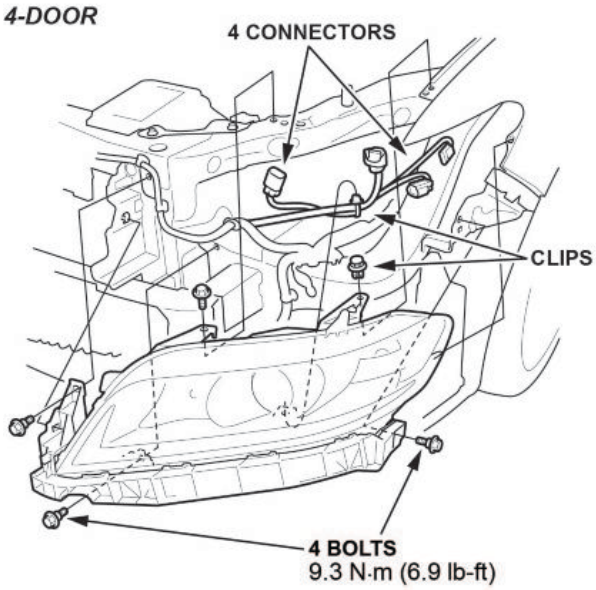

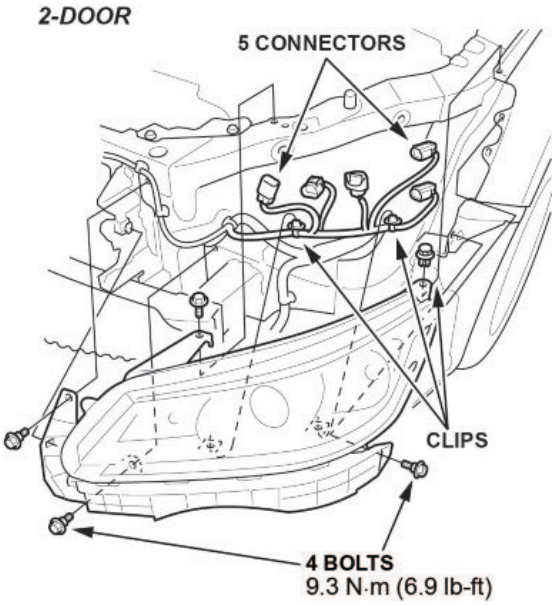

2.2. Disconnect the connectors.

2.3. Remove the harness clip.

2.4. Remove the corner upper beam and the headlight.

2.5. Remove the two bolts to separate the headlight from the corner upper beam, and drill a hole in the headlight to ensure it will not be reused.

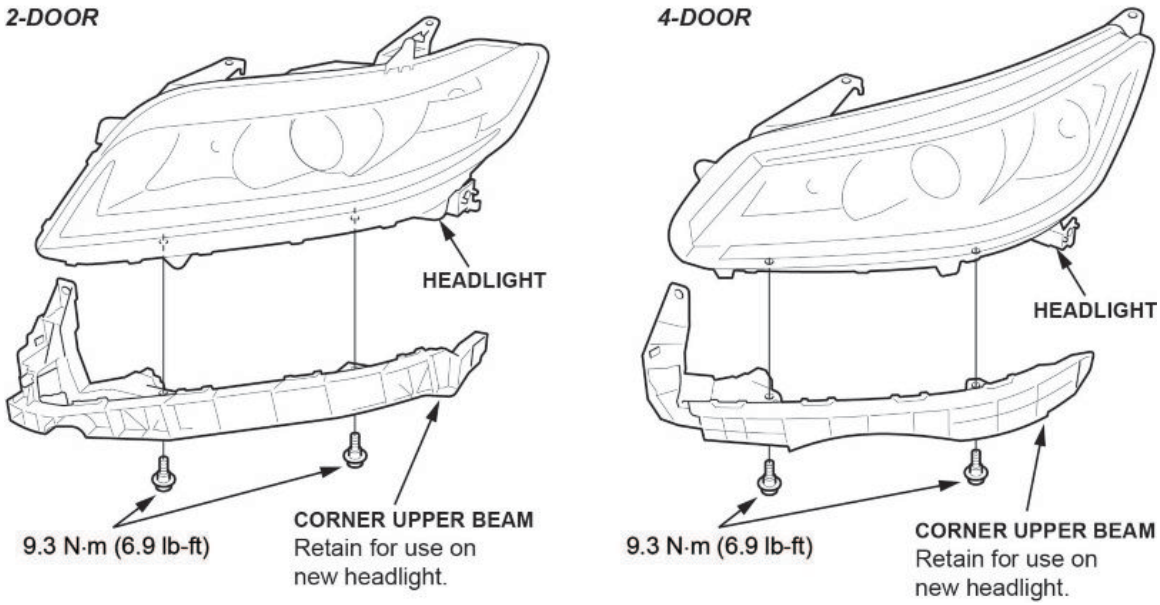

3. Install the original corner upper beam onto the new headlight(s).
4. Install the new headlight(s) in the reverse order of removal.
5. Install the front bumper in the reverse order of removal.
6. Adjust the headlights.
   6.1. Prepare the vehicle for the adjustment:
      6.1.1. Park the vehicle on a level surface.
      6.1.2. Make sure the tire pressures are correct.
      6.1.3. Unload the vehicle.
      6.1.4. Have someone sit in the driver's seat.
   6.2. Park the vehicle so the center part of the headlight is **24.6 ft (7.5 m)** from a wall or screen.

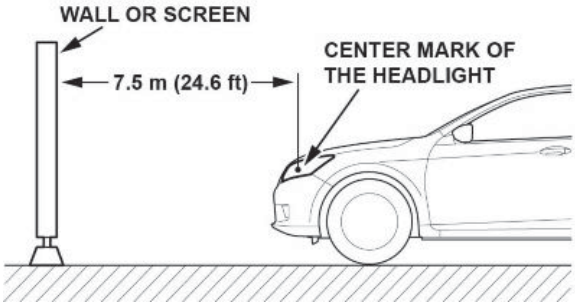

6.3. Measure the height of the headlight's center mark, then mark the same height on the wall or screen with a strip of masking tape (horizontally).

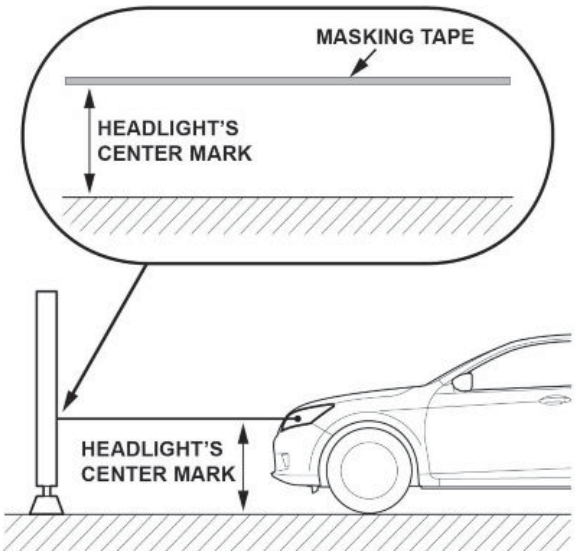

6.4. Turn on the low beam headlights.

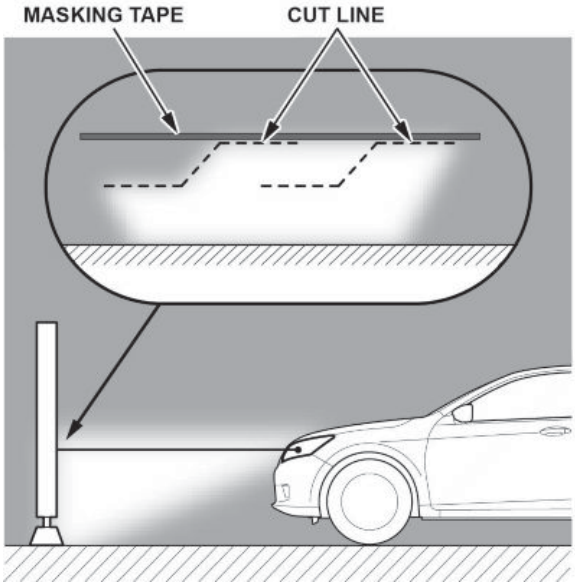

6.5. Check the beam from the headlights against the masking tape on the wall.

NOTE

To check if a headlight is out of adjustment, block one headlight with a large piece of cardboard and observe the beam shining on the wall. Then, move the cardboard to block the other beam, and check the second headlight.

- If the beam is at the same level as the masking tape, the headlights are properly aligned.
- If the beam is higher or lower than the masking tape, adjust the headlight(s) by opening the hood and turning the adjuster until the beam is level with the masking tape.

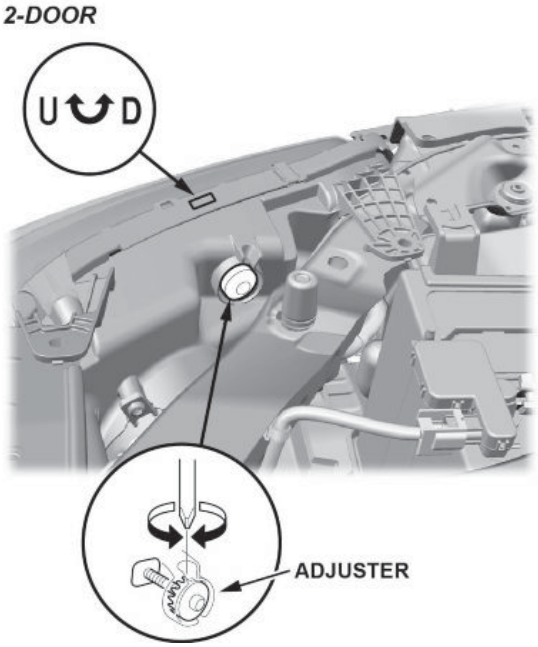

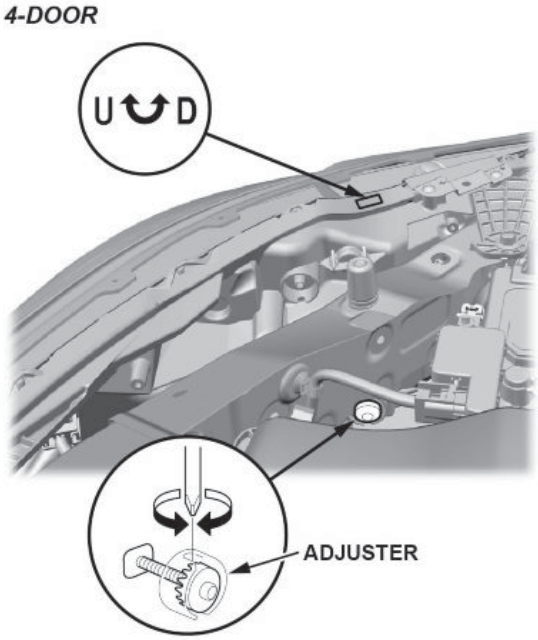

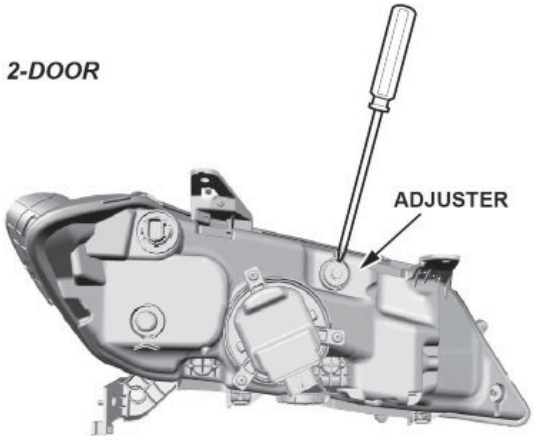

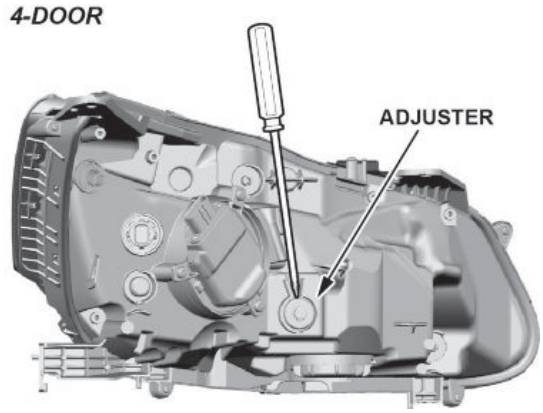

END