SERVICE BULLETIN
SB1667

ADDRESSEES	: Academy Bus
VEHICLE MODEL	: CX35 and CX45
MANUAL CHAPTER	: 12.06 Axles – front axle (CX35 and CX45) 12.14 Axles – trailing axle (CX45 only)
BULLETIN TYPE	: Field change program
DATE	: October 03rd, 2019
SUBJECT	: **To replace fastening system of wheel-suspension arm articulations**
CONDITIONS	: Refer to chapter "Warranty" further on in this bulletin.

APPLICATION:

The field change program, which is subject of this bulletin, applies only to the units listed below:

Vehicle type	VIN
CX35	49281 → 49290, 49796 → 49800, 49889 → 49894
CX45	49336→49360, 49751→49760, 49776→49785 81001 → 81005, 81270 → 81282, 81291 → 81295, 81336 → 81340, 81353 → 81355

DESCRIPTION:

- Owners and operators of above mentioned vehicles are asked to first check which type of fastening system is used and, in case of a M20 fastening system, to replace it by a M18 fastening system as explained in this service bulletin.
- Van Hool apologises for the inconvenience caused by this field change program and wishes to thank you in advance for your cooperation.

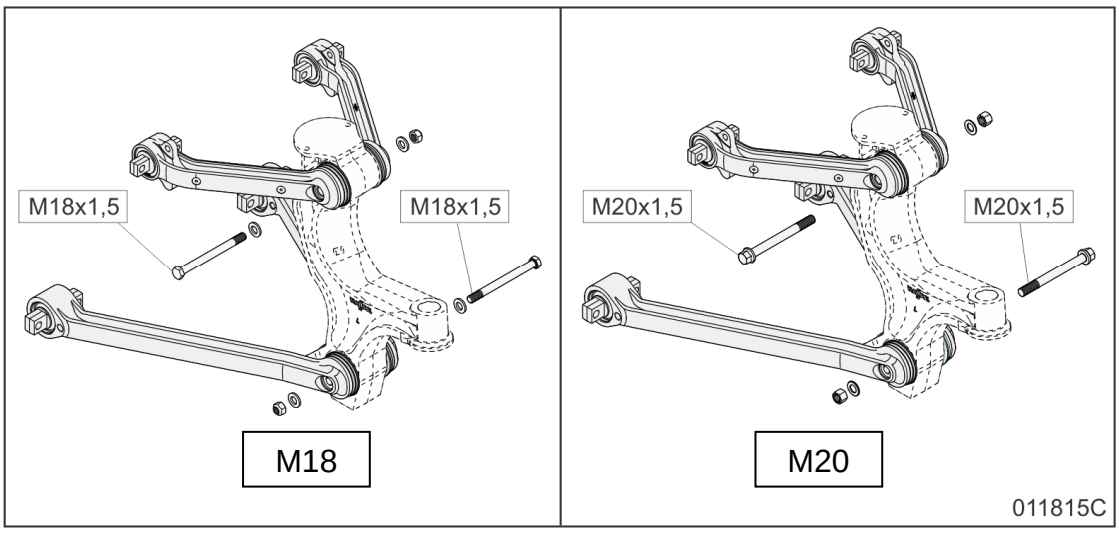

Figure 1: Fastening of wheel-suspension arm joints (figure shows front-wheel suspension)

Continued on next page

COMPARISON OF FASTENING SYSTEMS:

M18 fastening system	M20 fastening system
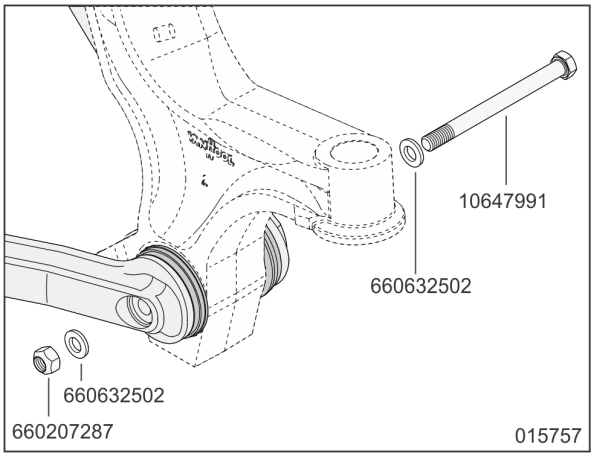	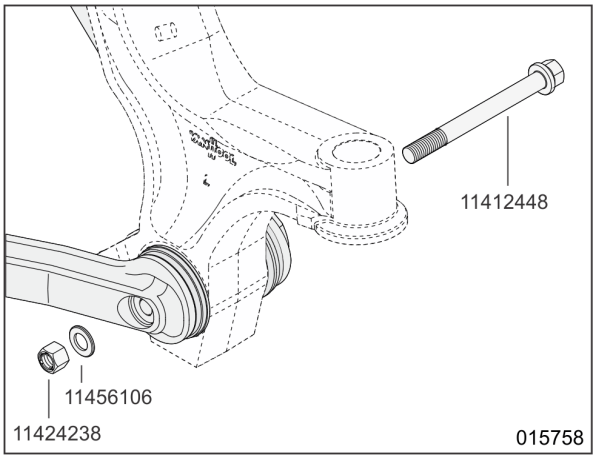
Properties of screw 10647991: • width across flats: 27 mm • screw shaft thickness: 18 mm • screw shaft length: 210 mm • thread type: M18x1,5 mm	**Properties of screw 11412448:** • width across flats: 27 mm • screw shaft thickness: 20 mm • screw shaft length: 205 mm • thread type: M20x1,5 mm *NOTE: Notwithstanding the thicker screw shaft, the width across flats of the M20 screw has remained 27 mm!*
Properties of nut 660207287: • width across flats: 27 mm • height: 18 mm • self-locking (by mechanical deformation of nut)	**Properties of nut 11424238:** • width across flats: 27 mm • height: 20 mm • self-locking (by notches at end of thread)

COMPONENTS:

Parts of kit VH11691985

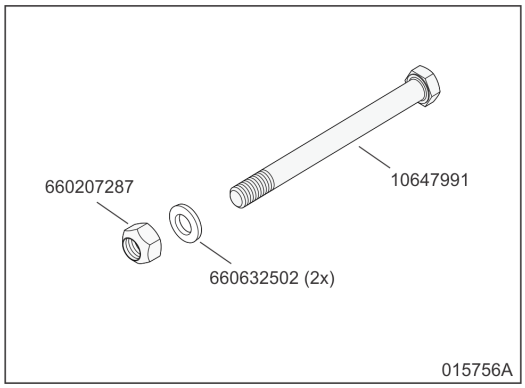

Figure 4

VH reference	Description	Quantity *
10647991	Screw	1
660207287	Self-locking nut	1
660632502	Washer	2

*Quantity suited for one joint

Continued on next page

JOB QUALIFICATION

This job has to be carried out by a technician experienced in suspension systems.

PREPARATIONS

- Park the vehicle on a level-surfaced pit with the front wheels straight. Apply the parking brake, stop the engine, switch off all systems and turn off the battery master switch on the dashboard.
- Turn off the mechanical battery switch.
- Put a “DO NOT OPERATE” tag on the instrument panel before beginning any inspection or performing any repair.
- Place chocks in front of and behind the drive axle wheels.
- Read the entire procedure before beginning to work.

WARNING!

Observe safe shop practices at all times.

PROCEDURE

Step	Action
1	Identify the fastening system on the front axle by means of the figures under "Comparison of fastening systems". Do this on the LH as well as on the RH side of the vehicle, and for the upper as well as for the lower wheel-suspension arms. For 3-axle vehicles, repeat this procedure for the trailing axle.
2	Change, if present, the M20 retaining bolts as explained in ”STEP 2 IN DETAIL”.
3	Notify ABC Companies by mail. Write the text “SB1667 completed for VIN…..” in the mail and send the mail to warranty@abc-companies.com.
4	**For ABC Companies only:** register through the registration button located behind Service Bulletin SB1667 on the Van Hool customer portal. Write the text "SB1667 completed" in the field "Remark". Labor allowance will only be awarded after Van Hool has received the registration.

End of procedure.

STEP 2 IN DETAIL: To replace M20 retaining bolts

NOTE: The steps/figures shown in the procedure are for a front axle. The procedure for a trailing axle is broadly similar.

Step	Action
2.1	Ensure chocks are placed in front of and behind the drive axle wheels. Jack up the vehicle until the wheels clear the ground. Support the chassis with stands or wooden blocks.
2.2	Discharge all the air from the air system by opening the drain valves of all air tanks.
2.3	Remove the road wheel.

Continued on next page

2.4	Disconnect the leveling valve connection rod from its lower attachment. Pull down the leveling valve actuating lever to deflate the air bellows. 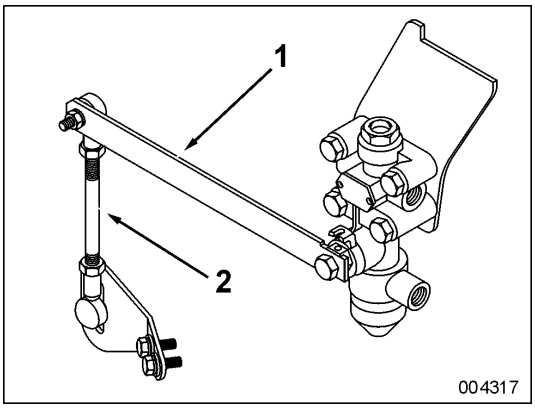 **Figure 5: Leveling valve on front axle** **1. Actuating lever** **2. Connection rod**
2.5	Check that part of the rubber bushings that is immediately visible for damage. If no damage is perceptible, the rubber bushings can stay in place. Otherwise, you have to change them according to the instructions mentioned in the maintenance manual.
2.6	Remove the articulation assembly bolts. 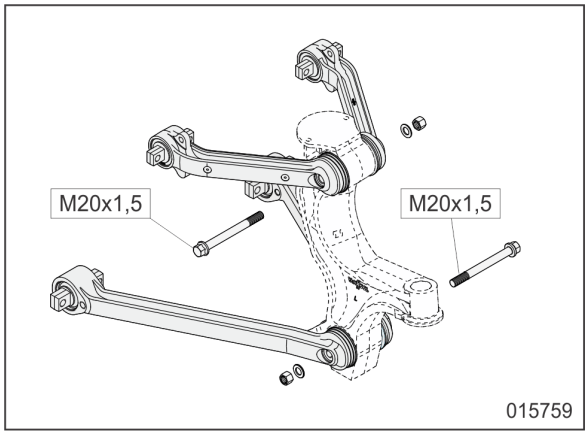 **Figure 6**
2.7	Install the M18 articulation assembly bolts from the kit. The “hollow” side of the spring washers must be directed towards the suspension arm (refer to figure 7). Hand-tighten the nut of the articulation assembly bolts. 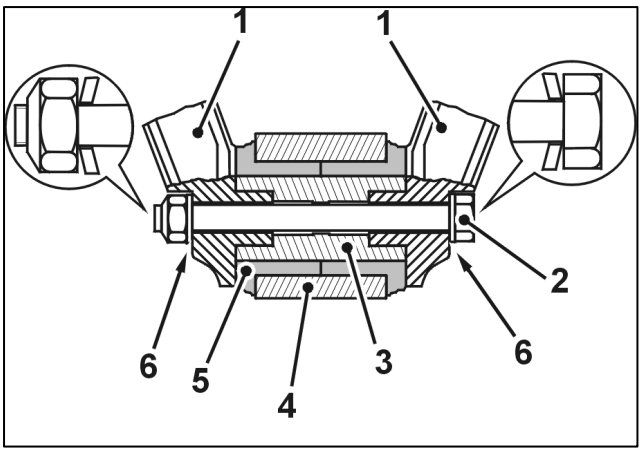 **Figure 7: Articulation joint, steering knuckle carrier side** **1. Suspension arm** **2. Articulation assembly bolt (with self-locking nut)** **3. Articulation assembly shaft** **4. Steering knuckle carrier** **5. Rubber bushing** **6. Special spring washer**

Continued on next page

2.8	Jack up the steering knuckle carrier until the suspension arms are horizontal. *NOTE: Both rubber bushings must be twisted equally strong when the wheel moves up and down. Therefore the articulation assembly bolt may only be fastened while the suspension arms are in horizontal position.*
2.9	Tighten the articulation assembly bolts to a torque of 300 + 50 Nm (220 + 35 ft.lbf).
2.10	Reconnect the leveling valve connection rod to its lower attachment.
2.11	Install the road wheel and lower the vehicle (*refer to the appropriate Van Hool Maintenance Manual for wheel installation instructions*).
2.12	Fill the air system.

WARRANTY:

1. Conditions

Van Hool accepts claims for this conversion as follows:
Compensation for labor hours: 15 minutes per retaining bolt replaced
Campaign target date: Service Bulletin issue date + 0.5 year

2. Claim references:

- **Job code**: SB1667-1
- **Claim submission:** Contact ABC Customer Care Warranty Department for guidance.
- **Monitoring and performance:** The claim records pertaining to this Bulletin will be used to determine that the remedy has been executed in accordance with the manufacturer's instructions and to evaluate the status of this Field Change Program.

DISCLAIMER:

The procedures contained herein are not exclusive. Van Hool cannot possibly know, evaluate, or advise the transportation industry of all conceivable ways in which a procedure may be undertaken or of the possible consequences of each such procedure. Other procedures may be as good, or better, depending upon the particular circumstances involved. Each carrier who uses the procedures herein must first satisfy himself thoroughly that neither the safety of his employees or agents, nor the safety or usefulness of any products, will be jeopardized by any procedure selected.

Continued on next page

INFORMATION HANDLING:

Important supplements to and modifications of technical information not yet included in the manual, are communicated by means of Service Bulletins.

VAN HOOL CUSTOMER PORTAL:

Consult the customer portal regularly for the latest service documentation. In addition to the maintenance manual, you will also find the operating manual and the spare parts catalogue of your vehicle on the customer portal. The customer portal is accessible through www.vanhool.be, and only with a code (password) from Van Hool. If you do not have a password yet, request it by using the link on the Van Hool website.