Technical Service Information Bulletin

2020 NX300, NX300h Pre-Delivery Service (PDS)

Service Category General

Section Pre-Delivery Service **Market** USA

Lexus Supports ASE Certification

Applicability

YEAR(S)	MODEL(S)	ADDITIONAL INFORMATION
2020	NX300, NX300H	

Introduction

This bulletin contains the vehicle specific pre-delivery services for 2020 model year NX300 and NX300h vehicles. Additionally, refer to the applicable Pre-Delivery Service (PDS) Check Sheet for services to be performed.

Warranty Information

OP CODE	DESCRIPTION	TIME	OFP	T1	T2
N/A	Not Applicable to Warranty	–	–	–	–

Procedures

- Front License Plate and Mounting Bracket Installation 2
- D/C Cut Fuse Installation 4

© 2019 Lexus, a division of Toyota Motor Sales, USA

2020 NX300, NX300h Pre-Delivery Service (PDS)

Front License Plate and Mounting Bracket Installation

The front license plate mounting bracket and two self-tapping screws for the 2020 model year NX300 and NX300h are stored in the rear cargo area of the vehicle. Install the license plate and mounting bracket during PDS.

1. Install the mounting bracket.
   A. Align holes "A" of the mounting bracket with the dimples on the radiator lower grille.

   NOTE
   - Holes "A" are used to install the mounting bracket onto the bumper cover.
   - Holes "B" are used to install the license plate onto the mounting bracket.

   B. Engage the two clips and screw the two supplied self-tapping screws directly into the dimples to install the front license plate mounting bracket.

   NOTICE
   - **Do NOT pre-drill holes into the dimples on the front bumper cover.**
   - **Do NOT overtighten the self-tapping screws.**

Figure 1.

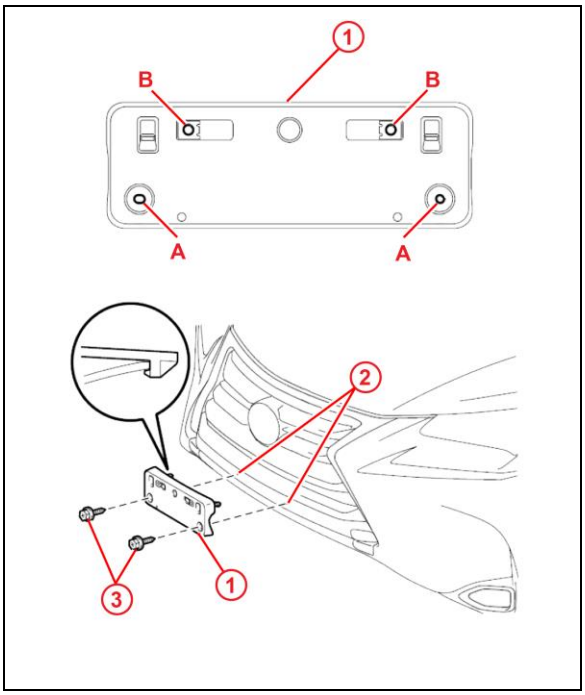

1	Mounting Bracket
2	Dimple
3	Self-tapping Screw

© 2019 Lexus, a division of Toyota Motor Sales, USA

2020 NX300, NX300h Pre-Delivery Service (PDS)

Front License Plate and Mounting Bracket Installation (continued)

2. Install the front license plate onto the mounting bracket using two noncorroding bolts with the following dimensions.

   Nominal Length: 15.0 mm (0.59 in.)

   Diameter: 6.0 mm (0.24 in.)

Figure 3.

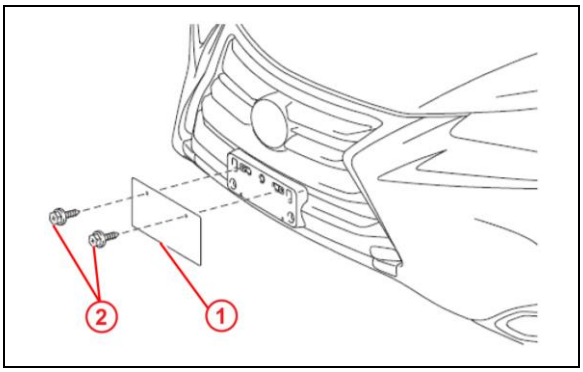

1	Front License Plate
2	Bolt

Figure 4.

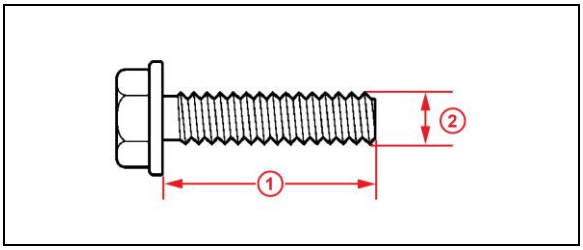

1	Nominal Length
2	Diameter

© 2019 Lexus, a division of Toyota Motor Sales, USA

2020 NX300, NX300h Pre-Delivery Service (PDS)

D/C Cut Fuse Installation

To minimize battery discharge during transportation and storage, the D/C cut fuse (20A) has been removed at the assembly plant and temporarily stored in the blank space of the relay block in the engine compartment. During PDS, reinstall the D/C cut fuse (20A) into its original location and clear ALL related Diagnostic Trouble Codes (DTCs)

Remove the D/C cut fuse (20A) from the blank space of the relay block in the engine compartment and install it in the location shown.

Figure 5.

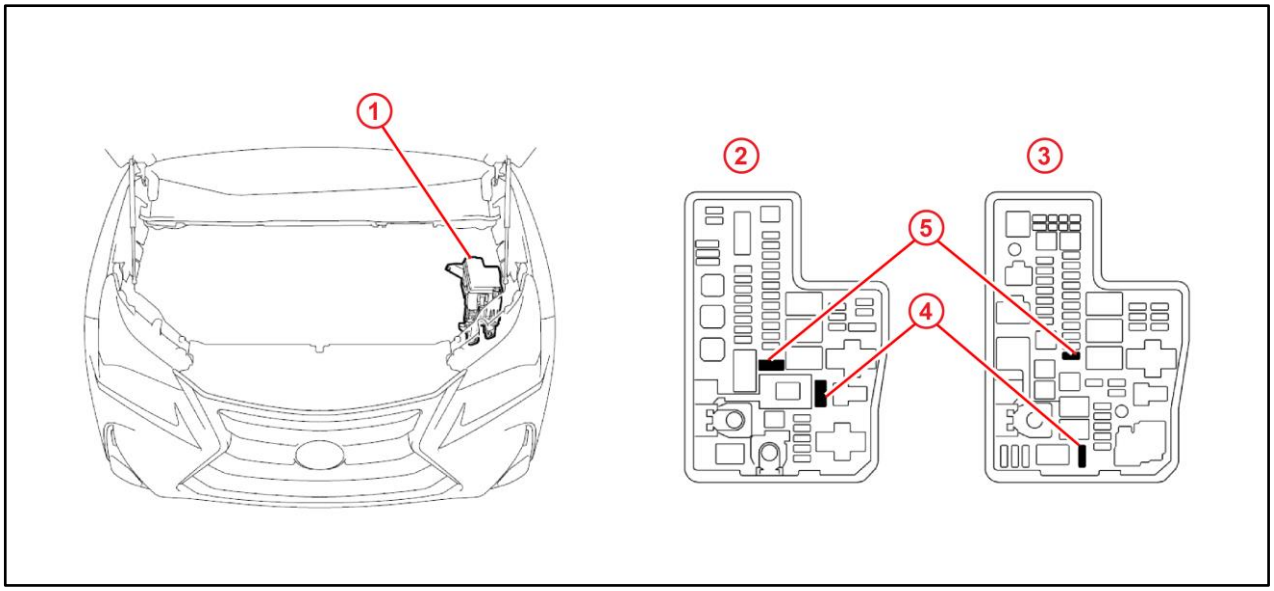

1	Relay Block
2	For Hybrid Vehicles
3	For Gasoline Vehicles

4	Remove This D/C Cut Fuse (20A)
5	Install D/C Cut Fuse (20A) Here (Original Location)

NOTE

While the vehicle is stored at the dealership, disconnect the negative (–) battery terminal to prevent battery discharge. Refer to Service Bulletin No. L-SB-0013-19, *Battery Maintenance During PDS,* for battery maintenance information.

© 2019 Lexus, a division of Toyota Motor Sales, USA