BMW Group - AIR: 2018-06-07 / 15:48
Dealer: -/-
Model: i8
Development code: I12
Model code: 2Z43
Lead type: 2Z43
Order number: -

Repair instruction

Butt connector for repairing a plug connection

REP-REP-RAF0161-6113STOSSVERBINDER - V.24

61 13 ... Butt connector for repairing a plug connection

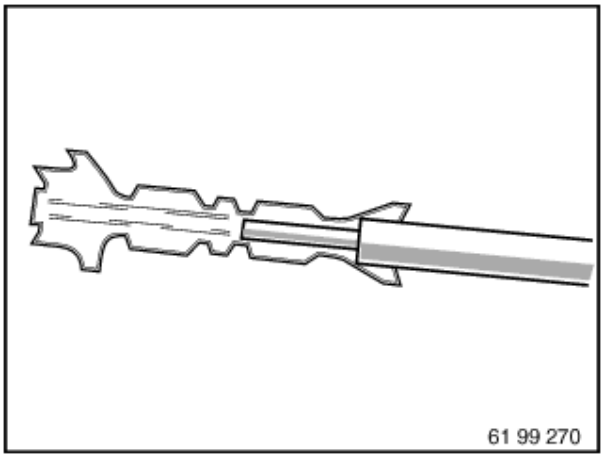

Special tools required:

- 61 0 300
- 61 4 340
- 61 0 240

Important:

1. Identify cause of damage (e.g. sharp-edged body parts, faulty electrical loads, clamped mechanisms, corrosion caused by ingress of water, etc.).
2. Reading out the fault memory
3. Eliminate cause of damage.
4. Disconnect battery negative terminal
5. Make sure that, according to circuit diagram, no safety-related systems (e.g. ABS, active rear-axle

kinematics, airbags, etc.) are affected. Otherwise replace faulty wiring harness or use repair cable (sourcing reference: BMW Parts Department)

6. Carry out function test and read out fault memories again
7. Eliminate new faults if applicable and clear fault memories

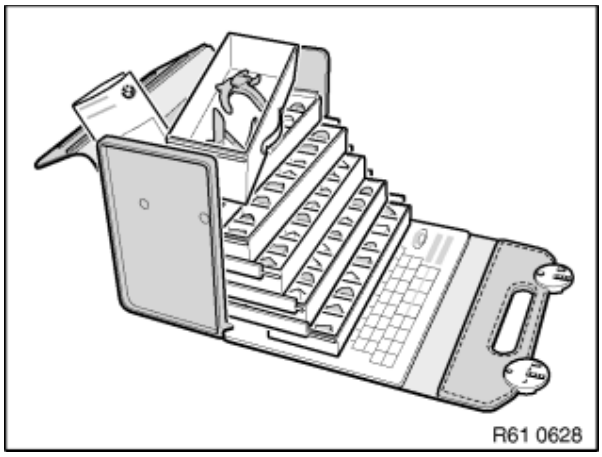

Note:

The repair product range IV for vehicle electrical system contains the required special tools and individual parts for retrofitting and repair work with the aid of fan connectors.

The case can no longer be ordered. Order individual parts for wiring harness repair through BMW Parts Department.

- Refer to Service Information:

  SI 02 04 07 341

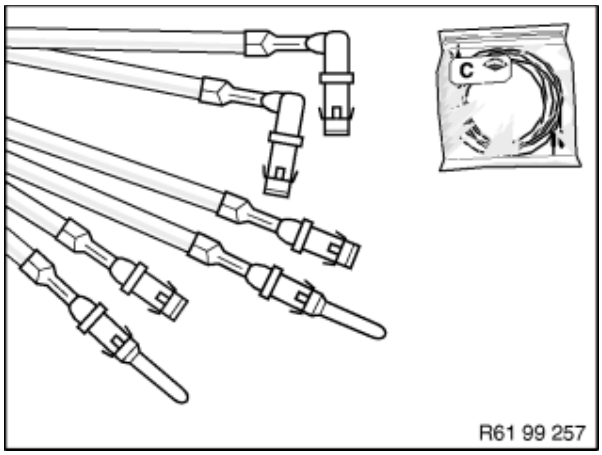

Choose repair kit.

Example: Repair kit, circular connector system D 2.5.

Remove following parts:

(1) Pre-packaged end of cable with requisite wire cross-section

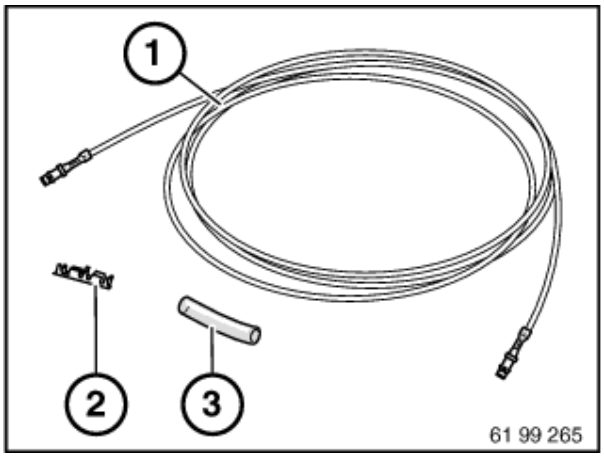

(2) Crimp connector for selected wire cross-section

(3) Shrink-fit hose

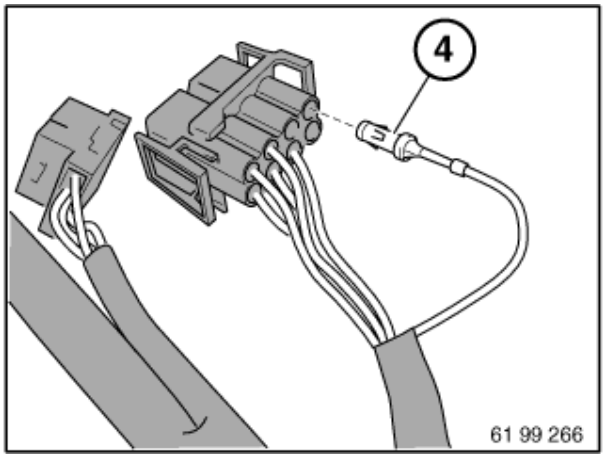

Open secondary lock on housing.

Mark damaged contact (4) with socket number of housing and press it out of housing using appropriate special tool contained in special tool set 61 0 300).

See repair instructions

Notes for opening contacts and locks of different plug contact systems.

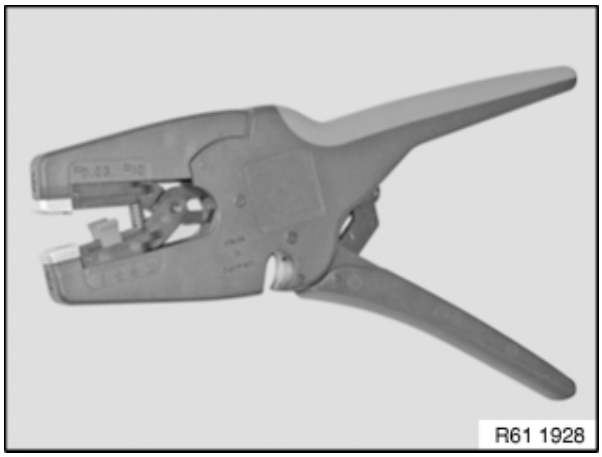

Important:

- Check maximum length of repair cable
- If more than one wire is to be repaired, the individual interfaces must be offset so that the wiring harness is not too thick at the repaired point.

Adhere to following procedure:

- Cut off wire with faulty contact at point which is easily accessible
- Strip off insulation from end of wire at wiring harness end
- Cut preassembled wire end to length and strip off insulation

Refer also to repair instruction:
Cutting to length and stripping off insulation from cables

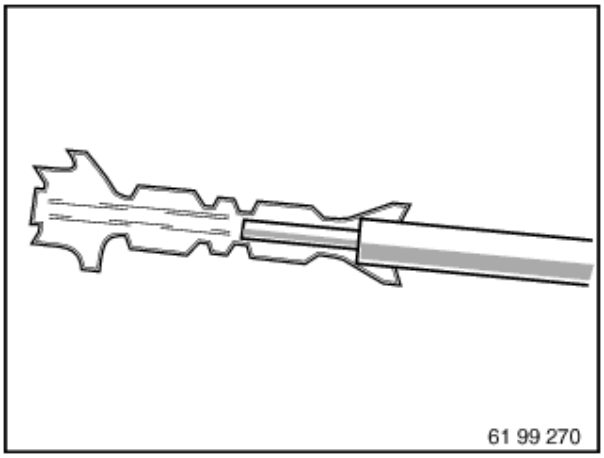

Crimp butt connector on preassembled wire end.

Special tools:

- 61 4 340 (0.35 - 2.5 sq mm)
- 61 0 240 (4.0 - 6.0 sq mm)

See repair instructions
Crimping on stop parts

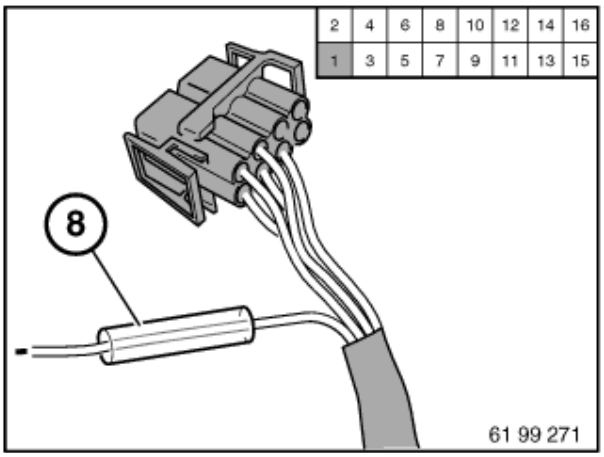

Push shrink-fit hose (8) onto free wire end.

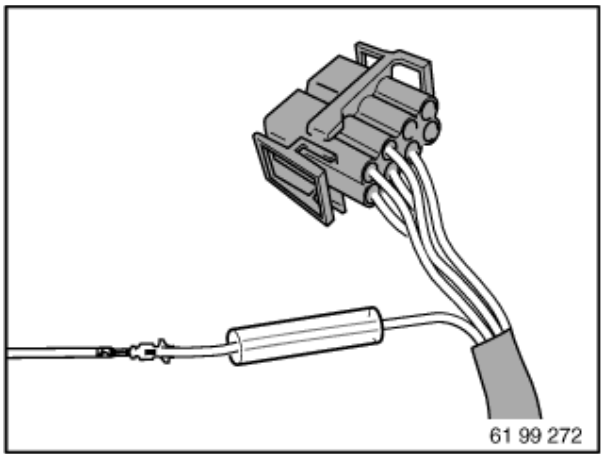

Crimp unused wire end to butt connector.

Pull shrink-on sleeve over butt connector.

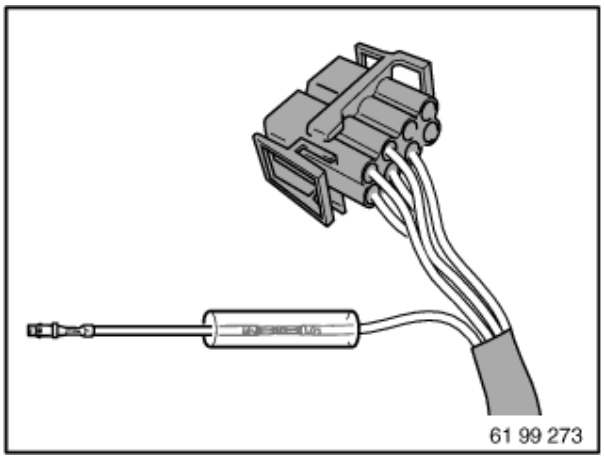

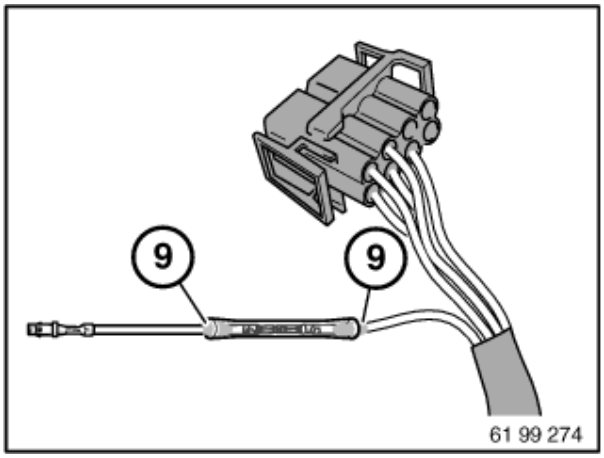

Important:

Do not combustion shrink-on sleeve.

With hot air blower, shrink the shrink-on sleeve on both sides (9) of shrink-fit hose until glue emerges uniformly all round.

Insert contact in housing.

Close secondary lock on housing.

SI B17 03 18
Cooling Systems

July 2018
Technical Service

CHECK CONTROL MESSAGE “TOP UP COOLANT’ (I12)

MODEL

I12 (i8)

Vehicles produced to March 15, 2016

SITUATION

The “top up coolant” message is displayed in the central display (CC message ID 166). When checking the cooling system there are no leaks found and the expansion tank is filled to the proper level.

PART RETENTION

1. BDC software error
2. Poor contact in the electrical connector at the coolant level sensor in the expansion tank

PROCEDURE 1

Check the current I-level of the vehicle. If the I-level is I001-16-03-501 or lower, reprogram and code the vehicle with the latest version of ISTA 4.

NOTE: No programming is necessary if the I-level is higher than 16-03-503. If no programming is necessary **continue to Procedure 2**.

Note that ISTA will automatically reprogram and code all programmable control modules that do not have the latest software.

Always connect a BMW-approved battery charger/power supply (SIB04 23 10**).**

Continue to Procedure 2.

PROCEDURE 2

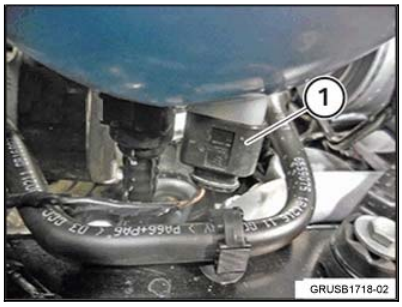	Replace the expansion tank and plug connection (1):

Follow Repair Instruction **17 11 100 Remove and install/replace coolant expansion tank (high-temperature cooling system) (I12).**

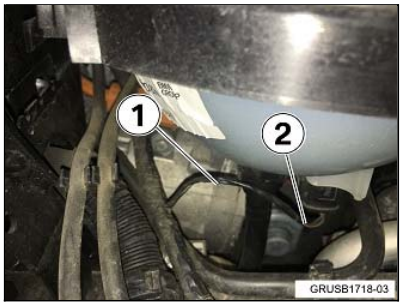	Once the expansion tank is removed, Remove the protective tape (1) approximately 4 inches away from the connector and cut the connector off the harness (2)
	The repair harness (PN 61 11 9 312 324) comes with two spice terminals and two heat shrink sections.
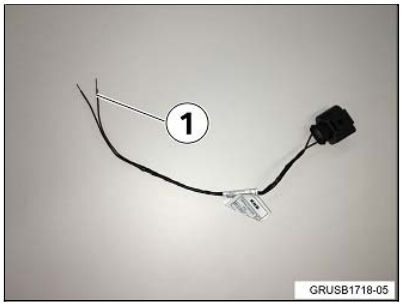	Cut back approximately 8 – 10 inches of the repair harness after the connector for coolant level switch. **NOTE:** The repair kit has enough wire to connect the coolant level sensor to the BDC. Only 8 – 10 inches of wire are needed for this repair.

Follow Repair Instruction **61 13 ... Butt connector for repairing a plug connection** for installing and crimping the repair harness to the vehicles harness (instructions attached).

Complete the installation of the new coolant expansion tank.

PARTS INFORMATION

Part Number	Description	Quantity
17 13 7 640 831	Coolant expansion tank	1
61 11 9 312 324	Repair cable kit	1
Bulk Material		
82 14 1 467 704	Antifreeze	As needed

WARRANTY INFORMATION

Covered under the terms of the BMW New Vehicle Limited Warranty for Passenger Cars and Light Trucks or the BMW Certified Pre-Owned Program.

Defect Code:	6131271400	

Procedure 1: If the vehicle's I-level is at I001-16-03-501 or lower

Labor Operation:	Labor Allowance:	Description:
00 00 006	Refer to KSD2/AIR	Performing "vehicle test" (with vehicle diagnosis system – checking faults) (Main work)
Or:		
00 00 556	Refer to KSD2/AIR	Performing "vehicle test" (with vehicle diagnosis system – checking faults) (Plus work)
And:		
61 21 528	Refer to KSD2/AIR	Connect an approved battery charger/power supply (indicated in KSD2 as "Charging battery")
And:		
61 25 910	Refer to KSD2/AIR	Recharging high-voltage battery unit (to high voltage charging socket)
And:		
61 00 730	Refer to KSD2/AIR	Programming/encoding control unit(s)

If you are using a Main labor code for another repair, use the Plus code labor operation 00 00 556 instead of 00 00 006. Only **one Main** labor (work) code is claimable per repair visit.

Refer to KSD2/AIR for the corresponding flat rate unit (FRU) allowances.

During the same workshop visit, if a vehicle also requires another Technical Campaign or repair that also includes programming and encoding the control units, the programming procedure may only be invoiced one time.

Vehicle Programming and Encoding

A. The programming procedure automatically reprograms and encodes all vehicle control modules which do not have the latest software i-level. If one or more control module failures occur "during" this programming procedure:

   • Please claim this "consequential" control module-related repair work under the defect code listed in this bulletin with the applicable KSD2/AIR labor operations.

   Please explain this additional work (The why and what) on the repair order and in the claim comments section.

B. For control module failures that occurred "prior" to performing this programming procedure:

   • When "covered" under an applicable limited warranty, claim this control module-related repair work using the applicable defect code and labor operations (including diagnosis) in KSD2/AIR.

And/or:

Procedure 2: Replace expansion tank and plug connection

Labor Operation:	Labor Allowance:	Description:
17 00 009	Refer to KSD2/AIR	Checking the cooling system for watertightness with special tool (with tester) (Main work)
Or:		
17 00 509	Refer to KSD2/AIR	Checking the cooling system for watertightness with special tool (with tester) (Plus work)
And:		
17 11 550	Refer to KSD2/AIR	Removing and installing or replacing coolant expansion tank
And:		
17 99 000	3 FRU	Work time to replace connector for coolant level switch

If you are using a Main labor code for another repair, use the Plus code labor operation 17 00 009 instead of 17 00 509. Only **one Main** labor (work) code is claimable per repair visit.

Refer to KSD2/AIR for the corresponding flat rate unit (FRU) allowances.

Work time labor operation code 17 99 000 is not considered a Main labor operation. Also, since the “work time” FRU allowance to be claimed is specified, a separate punch time is not required. However, it still requires an explanation on the repair order and in the claim comments section.

And:

Procedure 2: Sublet – Bulk Material

Sublet Code 4	See the sublet reimbursement calculations below	Reimbursement for the repair-related bulk materials (Do not use part numbers for claim submission)

Sublet reimbursement calculation for claiming the applicable repair-related bulk material (BMW part number) is at the dealer net price for the “quantity used” plus your center’s handling.

BMW Antifreeze/Coolant: Claim for the amount that is needed to replace what was drained with a “50/50 coolant/water solution.”

Enter this material cost in sublet and itemize the amount on the repair order and in claim comment section.

ATTACHMENTS

View PDF attachment **61 13 Butt connector for repairing a plug connection**.

[Copyright ©2018 BMW of North America, Inc.]