Coupler Replacement Procedure

⚠ CAUTION

Support chassis according manufacturer's recommendations. Failure to properly support chassis, could result in personal injury or product damage.

1. Remove the coupler (Fig. 1A) from the A-frame (Fig. 1B) by cutting the welds (solid red lines represent cut lines).
2. Grind down any rough edges after removing the components. All areas should be smooth before continuing.

Fig. 1

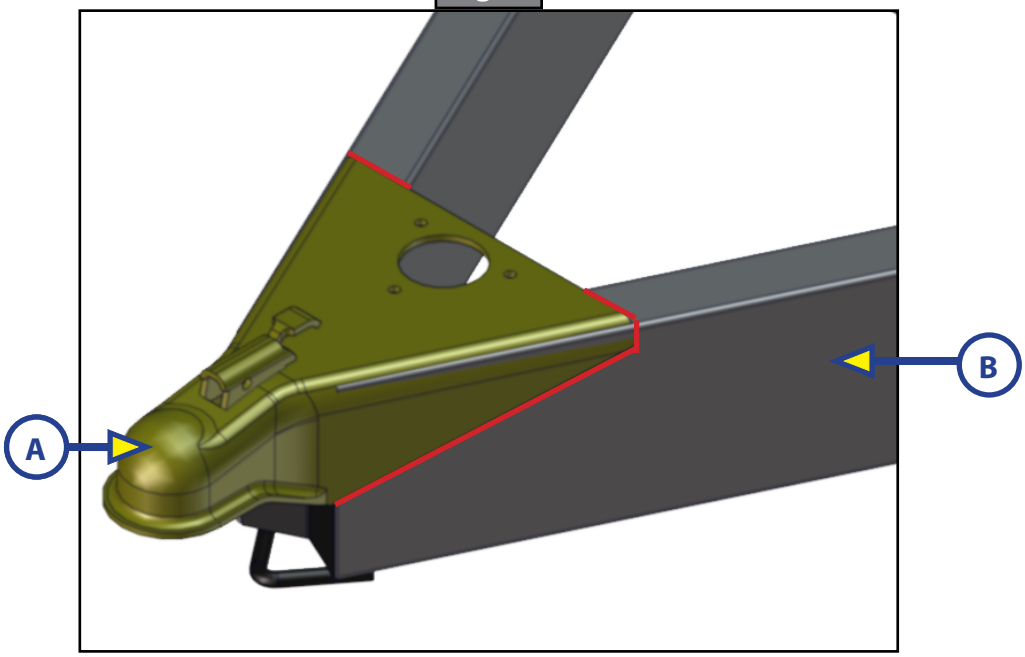

Fig. 2

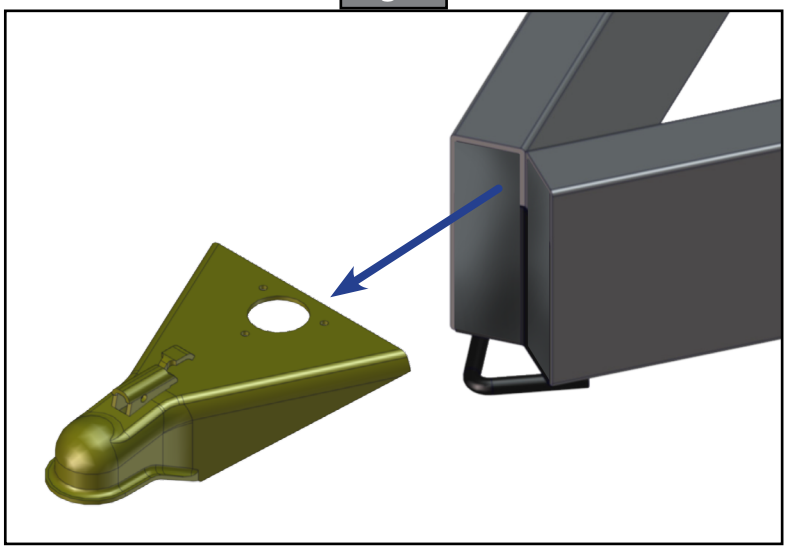

3. Weld the coupler (Fig. 3A) back onto the A-frame (Fig. 3B) (dashed red lines represent weld lines).

Fig. 3

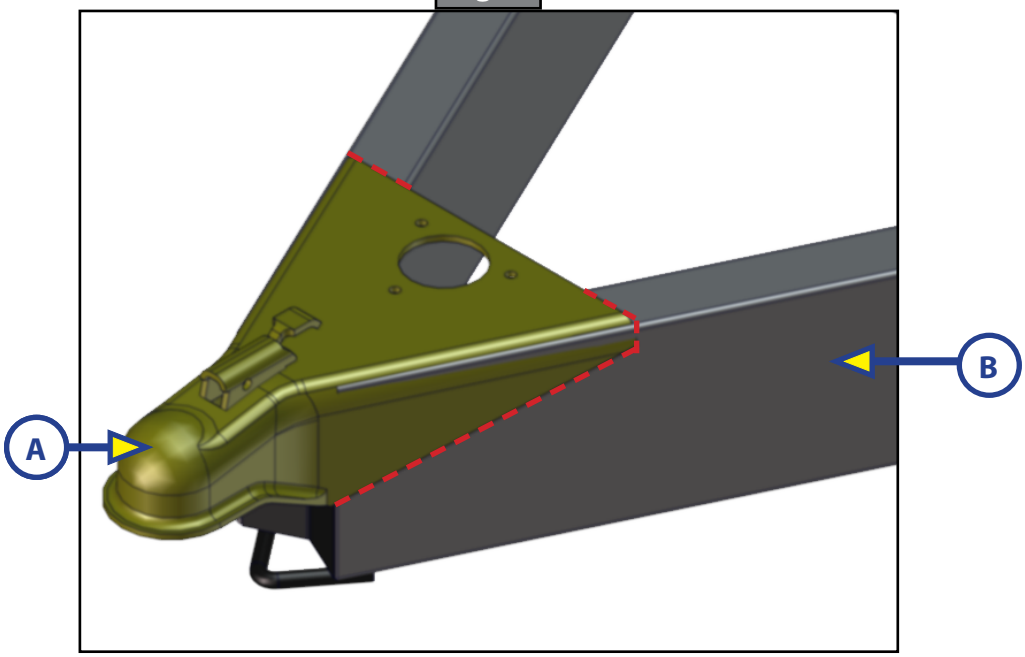

Lower Jack Plate Replacement

1. Remove the lower jack plate (Fig. 4A) from the A-frame (Fig. 4B) by cutting the welds (solid red lines represent cut lines).
2. Grind down any rough edges after removing the components. All areas should be smooth before continuing.

Fig. 4

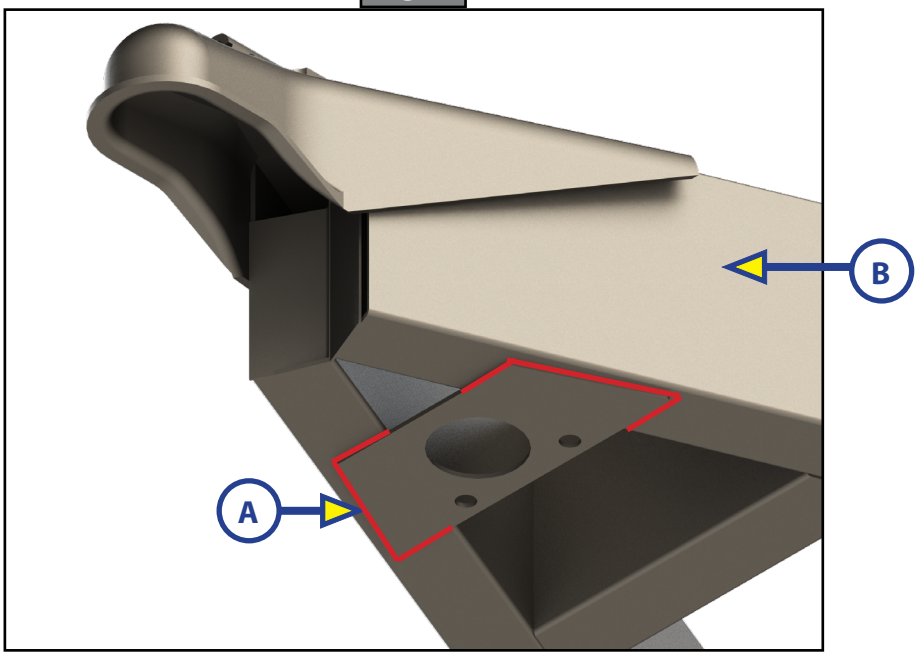

3. Using the tongue jack as a guide (not shown for clarity), insert the replacement lower jack plate onto the tongue jack, and position the plate onto the A-frame (Fig. 5).

Fig. 5

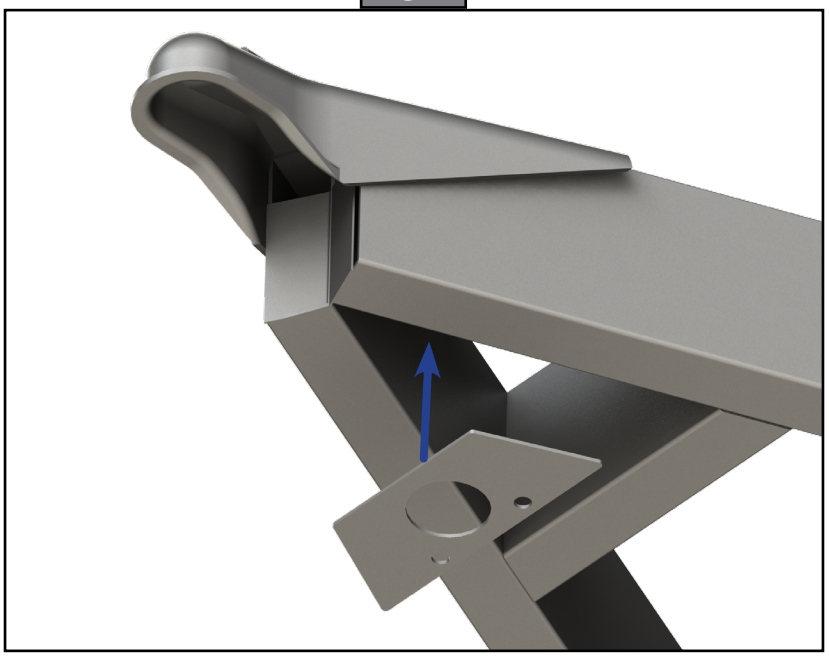

4. Weld the replacement lower jack plate (Fig. 6A) onto the underside of the A-frame (Fig. 6B) (dashed red lines represent weld lines).

NOTE: Take care to maintain a perfect right angle with the tongue jack, so that the tongue jack does not angle unnecessarily once the lower jack plate is mounted.

Fig. 6

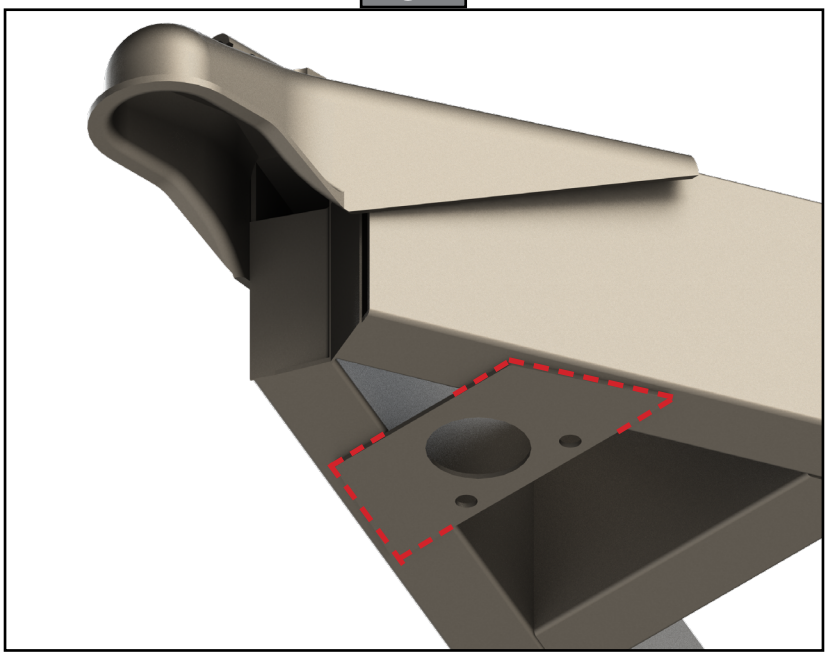

Cleanup

1. Inspect all welds once they have cooled. Ensure they are smooth. Clean up any that are necessary.
2. Verfiy the functionality of the new coupler once installation is complete.
3. Touch up any blemished areas with black spray paint.
4. Re-install the tongue jack per the manufacturer's instructions.

NOTE: The new coupler **MUST** use a 2 5⁄16" hitch ball, as the replacement coupler is physically larger.