IMPORTANT SAFETY RECALL

Date: 10/01/18

To: WTE5C/WTE5HP Series Water Trailers Owners

From: Multiquip Product Department

Subject: Trailer Axle Replacement — **Mandatory Update**

Dear Multiquip Customer,

Our records indicate your company purchased one or more models of the WTE5C/WTE5HP Series Water Trailers.

We have identified a limited production run of water trailers equipped with axle assemblies that do not meet the proper axle load ratings (3,500 lb. GAWR). This is due to mislabeled axles received from our supplier. **THE AXLES ON YOUR WATER TRAILER ARE UNDERRATED (2,470 lb. GAWR) AND MUST BE REPLACED**.

This recall notice applies ***only*** to the model(s) and serial number(s) specified in the accompanying service bulletin. Water trailers outside the specified serial number range are not affected.

Failure to repair imposes a safety risk. Safe operating and unit towing processes are in jeopardy due to the under rated GAWR capacity of the axles.

If this water trailer has been resold, please forward this bulletin to the new owner.

Your prompt attention to this matter is appreciated. If you have questions, please contact the Multiquip Technical Support Department at 800-478-1244 or techsupport@multiquip.com.

PARTS ORDERING INFORMATION

YOU MUST PLACE A PART ORDER WITH THE MULTIQUIP PARTS DEPARTMENT TO ENSURE PROPER SHIPMENT. Upon placing the order, the part needed will be shipped to you.

- Parts order form has been enclosed for your convenience.
- Use Multiquip's SmartEquip™ Online Parts Order System for faster service.

WARRANTY INFORMATION

Campaign: Reference No. WT20180925

Option 1: To expedite warranty reimbursement, submit warranty claim online with Multiquip's E-Warranty application. Contact the Multiquip Warranty Department for username and password.

Option 2: Fill out the enclosed Application for Warranty Consideration form and fax to the MQ Warranty Department.

Labor Allowance: 3.0 hour total flat rate for trailer axle replacement.

Warranty Campaign WT20180925
Parts Order Form

Please Print Clearly and Provide Requested Information as Accurately as Possible.

P.O. # _____

PARTS ORDER:

QTY.	PART NUMBER	DESCRIPTION
1	29396-SK	**Axle Assembly, TRLR70 Electric Service Kit**

Model No. _____ Serial No. _____
Sold to Company: _____Acct. No. _____
Contact Name: _____

Ship to Company: _____
Contact Name: _____
Street Address: _____
City: _____
State/Province: _____ Zip Code _____

❑ I need Authorized Service Center (ASC) or servicing dealer assistance. Please contact me with additional information.

Return Today By Fax

Toll Free Fax: 800/672-7877 • Direct Fax: 310/637-3284
Toll Free Phone: 800/427-1244 • Direct Phone: 310/537-3700
Export Parts Orders Fax: 310/537-3371

Application for Warranty Consideration

Your WO Ref #

MULTIQUIP INC.
18910 WILMINGTON AVENUE CARSON CA 90746
POST OFFICE BOX 6254 CARSON, CA 90749
Phone: 800-421-1244 FAX: 310-943-2249
E-mail: MQWarranty@Multiquip.com

NOTE: **THIS IS NOT A WARRANTY APPROVAL** until otherwise specified.

Account No.	Unit Model #	Purchase Date:
Dealer Name:	Serial #	Resale Date/in Service Date:
Address:	Hours Meter Reading:	Date of Failure:
City/State/Zip:	Engine Model #	Date of Repair:
Contact:	Engine Serial #	Date of Claim:
Phone #	**Fax #**	**Email:**

PARTS REPLACED

Qty / Hrs	Part Numbers	Item Description	Invoice or Packing List # On Replacement	Net Each	Extended Amount
PRIMARY FAILED PART — List the defective part replaced (the part that caused the warrantable failure)					
ALL OTHER PARTS— List all other parts used to complete the repair					
1	29396-SK	Axle Assembly, TRLR70 Electric Service Kit			
Travel Time (allowed on Power Equipment only):		**Jobsite Address:**			
	Millage:				
	Freight:				
				Total $	

	NOTE: Labor is subject for consideration by MQ approval.	LABOR HOURS	LABOR RATE	AMOUNT
FSM Approval Ref # (If assigned by Field Service Mgr.)	Labor	3.0		
	Parts			
	Misc.			
			TOTAL CLAIM $	

(Detailed) Reason for Warranty Claim

Problem/Cause:

1. Current axle assemblies do not meet with proper axle load ratings (GAWR).

Remedy/Notes:

1. Replace existing axles with proper rated axle (3,500 lbs./1,587 kg) assemblies.
2. Affected axles (2,470 lbs.) must be returned to the vendor as follows:
   Ship to: Dexter MWR, 1845 South 300 West, Salt Lake City, UT 841115
   Attention: B. Quigley
   Use account number: XPO Logistics 640849505

PLEASE NOTE: Affected axles must be shipped to vendor within 30 days.

On-line Warranty Application is also available; please contact MQ Warranty Department to obtain access

Service Bulletin
WTE5C/WTE5HP Series Water Trailers

Product Group:	Date Issued:	Service Bulletin No.
Water Trailer Models: WTE5C/WTE5HP	10/01/18	WT20180925

Bulletin Type

X Mandatory

_____ Information Only

_____ Recommended Change

SERIAL NUMBER/VIN NUMBER

50022, 50024
50026 - 50028
50077 - 50083
50105 - 50117
50305 - 50308
50401 - 50406
50479 - 50484
50534 - 50539

S/N correspond to the last 5-digits of VIN located on the trailer frame

Details

Problem:

a. A select number of water trailers were shipped with axle assemblies that do not meet with proper axle load ratings (GAWR).

Solution:

a. Replace existing axles with proper rated axle assemblies.

Parts Information

Table 1. WTE5C/WTE5HP Axle Service Kit

Item No.	Part No.	Description	QTY.	Remarks
1	29396-SK	Assembly AxleTRLR70 Electric Service Kit	1	Includes items 2-8
2	19761	Splice Terminal	12	
3	2540	Wire Butt Conector	16	
4	29249	Axle, Hex Nut 9/16"-18 N-2	16	
5	29248	Axle, Mount Screw 9/16"-18 X 3"	16	
6	29396	Axle, Electric Brake Assy. 3,500 lb (1,587 kg) Capacity	2	
7	1662	Cable-Tie	8	
8	49498	Instruction Sheet	1	

Figure 1. Electric Axle Service Kit (TRLR70)

NOTES

NOTICE

Affected axles (2,470 lbs.) must be returned to the vendor as follows:

Ship to: Dexter MWR, 1845 South 300 West, Salt Lake City, UT 841115

Attention: B. Quigley

Use account number: XPO Logistics 640849505

Affected axles must be shipped to vendor within 30 days.

SAFETY

NOTICE

Only ***qualified*** personnel with proper training should perform this installation. Follow all shop safety rules when performing this installation.

PROCEDURE

NOTICE

The following step-by-step procedures are provided to assist in the removal and replacement of the tandem electric axle assemblies used on the Multiquip Water Trailer models: WTE5C and WTE5HP. Both axle assemblies will be replaced.

NOTICE

Secure trailer in accordance with Job Hazard Analysis (JHA) 20140618-002, ***Securing Trailer for Maintenance/Repairs.***

Axle Removal

1. Place water trailer on ***firm and level*** ground (Figure 2). **DO NOT** place trailer on soft or uneven ground. Soft or uneven ground will not allow for secure placement of hydraulic jack or jack stands.

Figure 2. Trailer Placement

2. Position a hydraulic jack behind the tire, using the frame (only) as a lift or contact point. The use of a wood block is acceptable to extend the height of the hydraulic jack.

NOTICE

DO NOT attempt to raise the trailer by jacking on the axles or the suspension. This will cause damage to the axles or suspension. **ALWAYS** place the jack underneath the frame to prevent bending or deformation of the axles or suspension.

3. Raise the trailer until the tire is no longer contacting the ground. The tire should be able to freely rotate while maintaining a minimum clearance between the ground and tire.

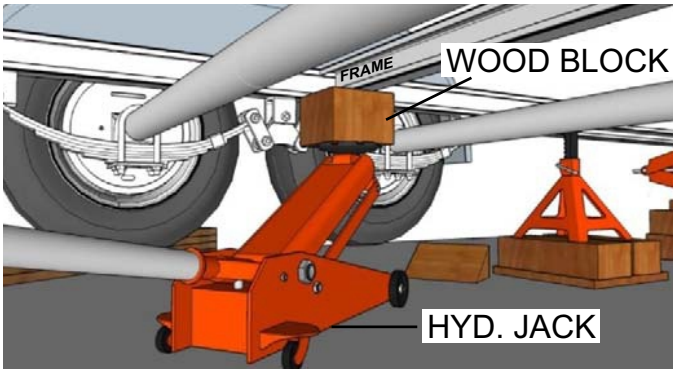

Figure 3. Jacking The Trailer

4. Next, place jack stands underneath the trailer frame.
5. Remove the tires (4) - break the wheel lug nuts (5) loose with a ratchet (or breaker bar) and socket.

Figure 4. Removing The Tire

6. Save the lug nuts they will be used later.
7. Locate the wiring harnesses along the right and left side of the trailer rails beneath the trailer frame.

8. Open the splice terminals (P/N 19761) and remove the wires coming from the axle brakes as shown in Figure 5.

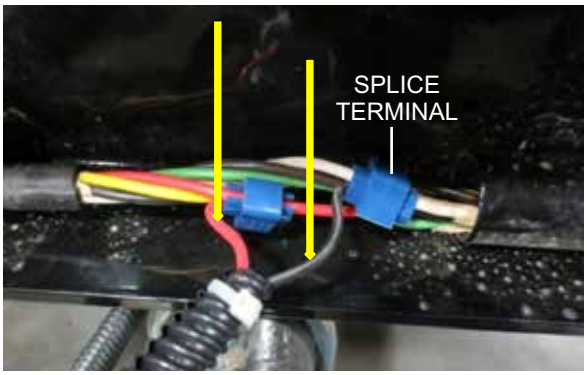

Figure 5. Splice Terminals

9. Loosen ***axle hex nuts*** (P/N 29249) as shown in Figure 6.

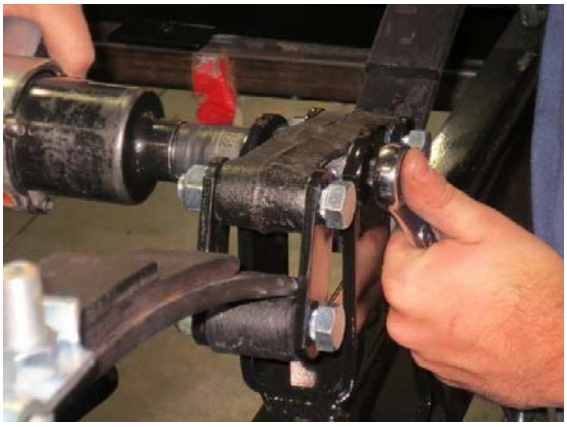

Figure 6. Loosening Axle Hex Nuts

10. Loosen the ***axle mounting screws*** (P/N 29248); it may be necessary to gently tap the screw (Figure 7) to advance the splines of the screw.

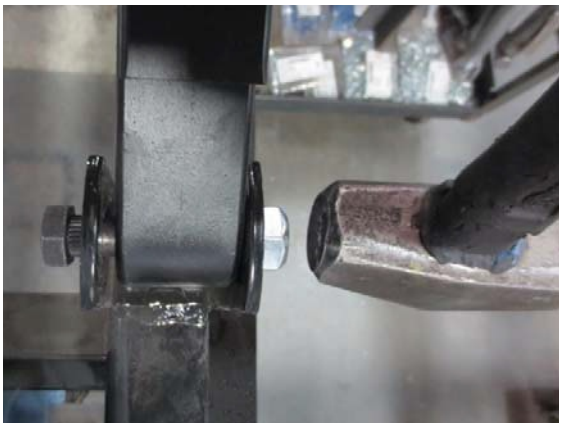

Figure 7. Removal Of Axle Screws

11. To stabilize the tandem axle (Figure 8) equalizers during the axle replacement process, place a 2" X 4" (or like item) as shown on the opposite axle that is being replaced.

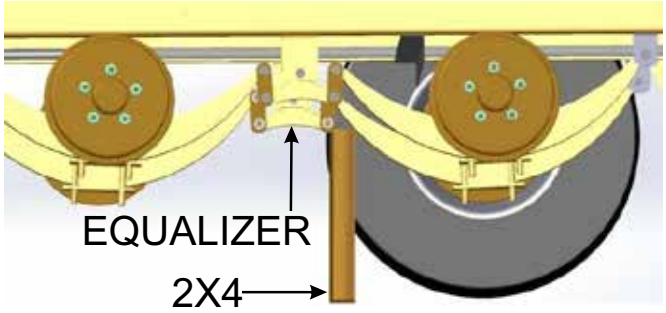

Figure 8. Stablizing Tandem Axle

12. Carefully remove the ***axle mounting screws*** (16) lower and remove the axle (Figure 9). Discard screws and hex nuts.

Figure 9. Axle Removal

NOTICE

Affected axles (2,470 lbs.) must be returned to the vendor as follows:

Ship to: Dexter MWR, 1845 South 300 West, Salt Lake City, UT 841115

Attention: B. Quigley

Use account number: XPO Logistics 640849505

Affected axles must be shipped to vendor within 30 days.

New Axle Installation

NOTICE

New hardware has been provided and is required for installation of the new axle assemblies.

1. When installing the new axle (3,500 lbs/1,587 kg), place the axle so that the brake wires (Figure 10) are oriented towards the rear of the water trailer.

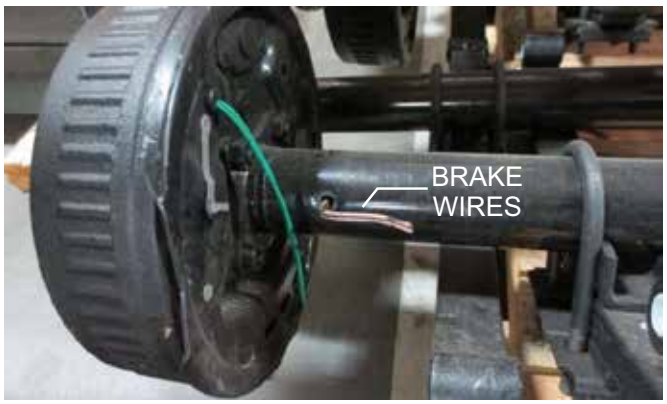

Figure 10. Brake Wire Orientation

2. Align the new axle assembly ((P/N 29396) with the hanger on the frame and equalizer as shown Figure 11

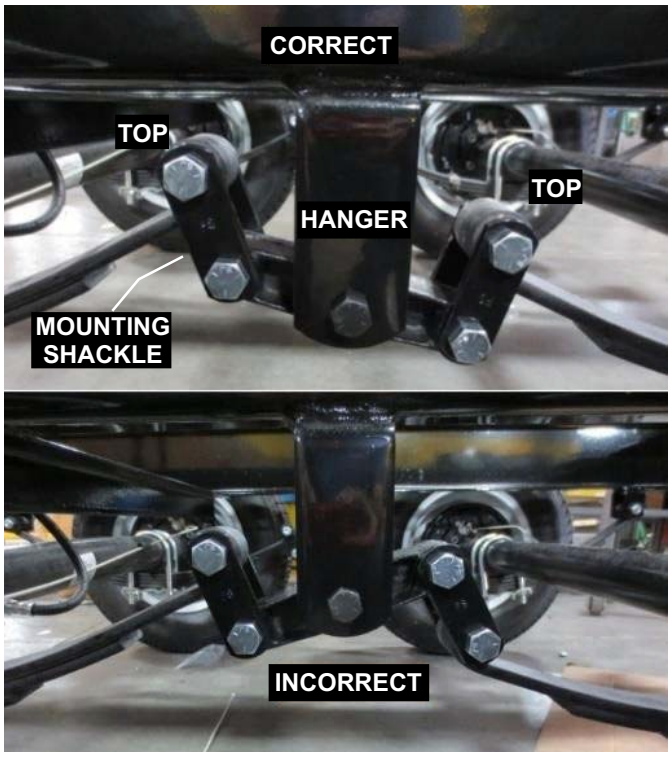

Figure 11. Mounting Shackle Orientation

3. Use new axle mounting screws (P/N 29248) and hex axle nuts to secure new electric brake axle assembly.
4. Fasteners should be only be ***hand-tightened*** at this time.
5. Use a ratchet and wrench to tighten axle mounting screws (P/N 29248) and hex axle nuts (P/N 29249) as shown in (Figure 12). **DO NOT** tighten screws all the way. Leave a 1/16" gap as shown in Figure 13.

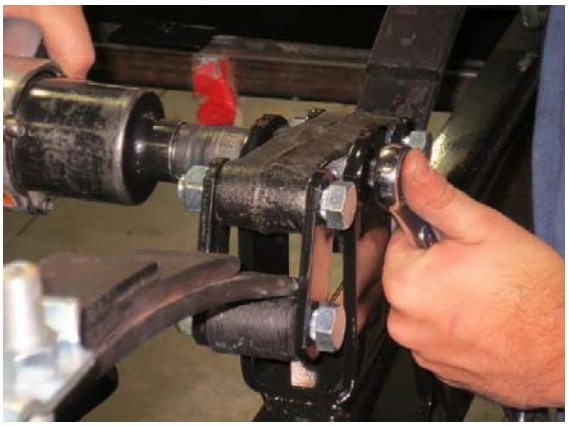

Figure 12. Tightening Axle Hex Nuts

Figure 13. Screw Gap

6. Using a hammer, ***gently tap*** (prevents damage to screw head) the screws so that they lay flush against the bracket (Figure 14A~D)

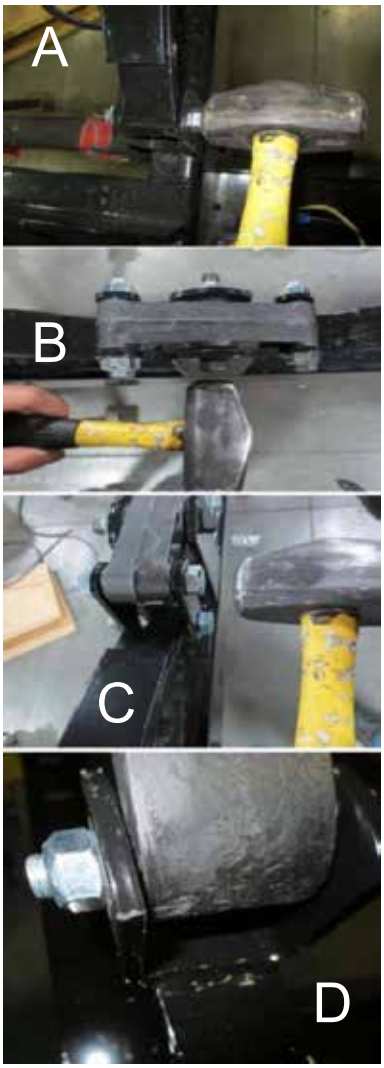

Figure 14. Tapping Axle Mounting Screws

Axle Wiring

CURB-SIDE

There are two wires extending from the axle tube as shown in Figure 15, connect these wires as follows:

> ***NOTICE***
>
> Wire colors may be different than those shown in Figure 15.

1. Using butt connectors (P/N 2540), attach the two wires coming from the axle tube to the two wires coming from the hub wire harness (Figure 15).

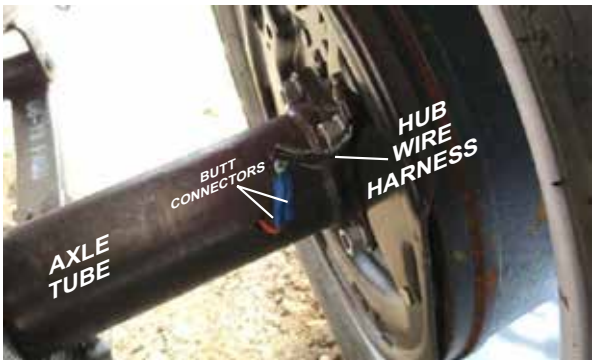

Figure 15. Curb-Side Wiring

STREET-SIDE

There are two wires extending from the axle tube as shown in Figure 16, connect these wires as follows:

> ***NOTICE***
>
> Wire colors may be different than those shown in Figure 16.

1. Using splice terminal connectors (P/N 19761), attach the two wires coming from the axle tube to the two wires coming from the hub wire harness (Figure 16).

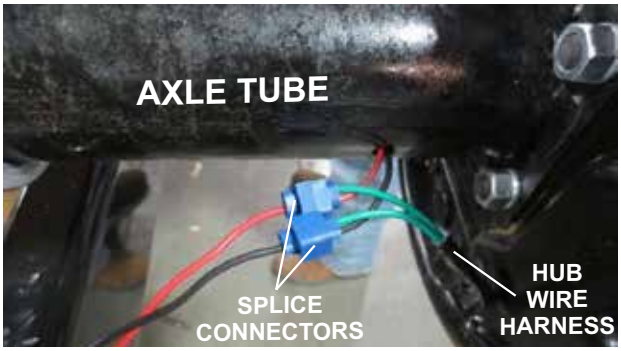

Figure 16. Street-Side Wiring

HARNESS WIRING

1. Use splice terminals (P/N 19761) to attach one wire to the RED wire and connect the other wire to the WHITE wire.
2. Use cable-ties to secure the wire bundles to the wire harness and axle tube as necessary.

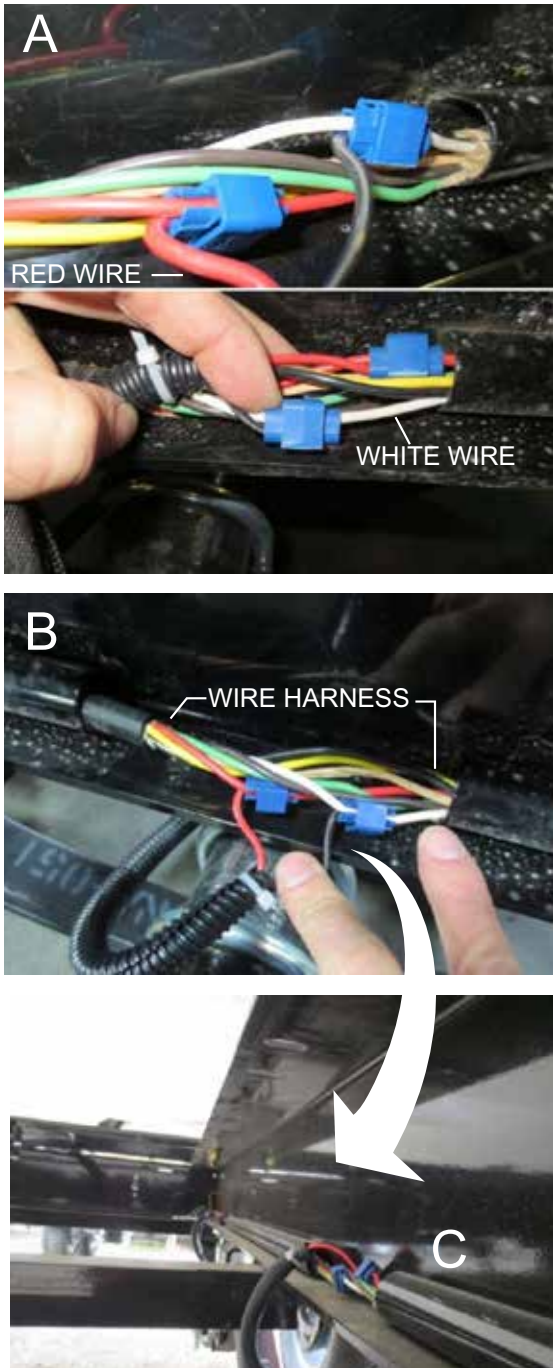

Figure 17. Wire Harness Connections

WHEEL MOUNTING

NOTICE

NEVER use an pneumatic air gun to tighten wheel lug nuts.

Over-tightening lug nuts will result in breaking the studs or permanently deforming the mounting stud holes in the wheels.

WARNING

Lug nuts are prone to loosen after initial installation, which can lead to death or serious injury. Check all wheel lug nuts periodically.

Lug Nut Torque Requirements

It is extremely important to apply and maintain proper wheel mounting torque on the trailer. Be sure to use only the fasteners matched to the cone angle of the wheel. Proper procedure for attachment of the wheels is as follows:

3. Start all wheel lug nuts by hand.
4. Torque all lug nuts in sequence. See Figure 18. **DO NOT** torque the wheel lug nuts all the way down. Tighten each lug nut in 3 separate passes as defined by Table 2.
5. Check to see if the lug nuts are tight after the first 10, 25 and 50 miles of driving and before each tow thereafter.

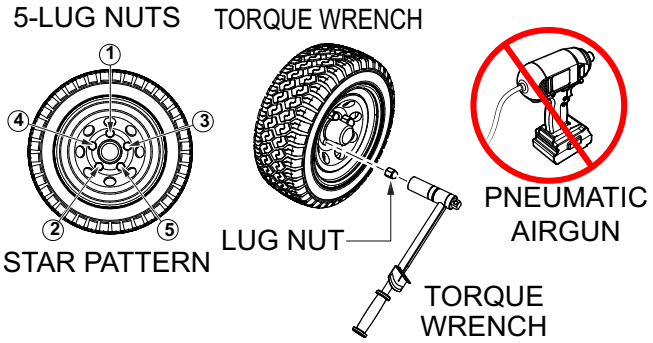

Figure 18. Wheel Lug Nuts Tightening Sequence

Table 2. Tire Torque Requirements

Wheel Size	First Pass FT-LBS	Second Pass FT-LBS	Third Pass FT-LBS
14"	20-25	50-60	90-120

NOTICE

Affected axles (2,470 lbs.) must be returned to the vendor as follows:

Ship to: Dexter MWR, 1845 South 300 West, Salt Lake City, UT 841115

Attention: B. Quigley

Use account number: XPO Logistics 640849505

Affected axles must be shipped to vendor within 30 days.

HERE'S HOW TO GET HELP

PLEASE HAVE THE MODEL AND SERIAL NUMBER ON-HAND WHEN CALLING

UNITED STATES

Multiquip Corporate Office

18910 Wilmington Ave.
Carson, CA 90746
Contact: mq@multiquip.com

Tel. (800) 421-1244
Fax (310) 537-3927

MQ Parts Department

(800) 427-1244
(310) 537-3700

Fax: (800) 672-7877

Service Department

(800) 421-1244
(310) 537-3700

Warranty Department

(800) 421-1244
(310) 537-3700

Fax: (310) 943-2249

Technical Assistance

(800) 478-1244

Fax: (310) 943-2238

CANADA

Multiquip

4110 Industriel Boul.
Laval, Quebec, Canada H7L 6V3
Contact: infocanada@multiquip.com

Tel: (450) 625-2244
Tel: (877) 963-4411
Fax: (450) 625-8664

UNITED KINGDOM

Multiquip (UK) Limited Head Office

Unit 2, Northpoint Industrial Estate,
Globe Lane,
Dukinfield, Cheshire SK16 4UJ
Contact: sales@multiquip.co.uk

Tel: 0161 339 2223
Fax: 0161 339 3226

© COPYRIGHT 2018, MULTIQUIP INC.

Multiquip Inc, the MQ logo are registered trademarks of Multiquip Inc. and may not be used, reproduced, or altered without written permission. All other trademarks are the property of their respective owners and used with permission.

This manual MUST accompany the equipment at all times. This manual is considered a permanent part of the equipment and should remain with the unit if resold.

The information and specifications included in this publication were in effect at the time of approval for printing. Illustrations, descriptions, references and technical data contained in this manual are for guidance only and may not be considered as binding. Multiquip Inc. reserves the right to discontinue or change specifications, design or the information published in this publication at any time without notice and without incurring any obligations.

Your Local Dealer is: