FIELD SERVICE CAMPAIGN BULLETIN

Subject: **Field Service Campaign 18M4**
Remanufactured Detroit™ DT12™ Transmission

Issue Involved

Detroit Diesel Corporation (DDC) has determined that some remanufactured Detroit™ DT12™ transmissions will need to be inspected, and have the rear range housing or transmission replaced.

Correctly built transmissions became effective with transmissions manufactured starting approximately in September, 2017. Any remanufactured Detroit™ DT12™ transmission manufactured before September, 2017, will need to be inspected and repaired. Note that some transmissions may already have been repaired and will be excluded from this program.

Inspection and repair of the remanufactured Detroit™ DT12™ transmission may prevent transmission shifting issues.

There are approximately 376 transmissions affected by this Field service campaign.

Transmissions Involved

A list of transmissions located in your area of responsibility that require this correction is attached.

The table below gives descriptive information to help identify the affected units:

Model Series	Model Number	Inclusive Transmission Mfg. Date (From) (To)
DT12-DA	716320	August, 2016, through September, 2017
DT12-OA	716330	
DT12-DB	716300	
DT12-OB	716310	

Owner Notification

Detroit Diesel will notify owners of equipment incorporating transmissions identified with this Field service campaign. A copy of the owner letter that will be used by Detroit Diesel is enclosed with this Field service campaign bulletin.

Dealer Campaign Responsibility

Detroit Diesel repair facilities are to service all transmissions subject to this Field service campaign. Field service campaign 18M4 is to be performed at no charge to owners on all affected transmissions under the transmission warranty. Please use the appropriate steps, noted below, for indicating that Field service campaign 18M4 has been completed.

Daimler Trucks North America Vehicles

- Check the base label (**Form WAR259**) to see if **Field service campaign 18M4** has been completed. The base label is usually located on the passenger-side door about 30 cm (12 inches) below the door latch. If **Field service campaign 18M4** has been completed, no further work is needed. If base label is not located on the passenger-side door, please affix label (**Form WAR259)** 30 cm (12 inches) from the door latch.
- Upon completion of **Field service campaign 18M4**, clean a spot on the base label (**Form WAR259**), write the Field service campaign Number (**18M4**) on a blank, black completion sticker (**Form WAR261)**, and attach it to the base label.

Ordering Information

1. If you do not have the appropriate Form *or* Labels (DDC_WAR 259, DDC_WAR 260. DDC_WAR 261), they can be ordered from **EPI Printers** by emailing your order to ddc@epiinc.com.
2. You can also fax in your order to **269-698-4240 Attn: Corrina Cotton**
3. Contact **EPI at 734-464-9000.**

Parts Information

See Table 1 below for a list of possible parts required for this Field Service Campaign. **EITHER** the rear range housing or complete transmission will be replaced based on the Corrective Procedure. Order the applicable part number only after completing steps 1-3 of the Corrective Procedure.

Remanufactured Transmission P/N	Rear Range Housing P/N	Rear Range Housing Description
DDE A9602600302RB	DDE R23565081	Range Model A, Plugged, Flange
DDE A9602600402RB	DDE R23565082	Range Model A, Oil Cooler Fitting, Flange
DDE A9602600502RB	DDE R23565083	Range Model A, Oil Cooler Fitting, Yoke
DDE A9602600602RB		
DDE A9602609601RB	DDE R23565078	Range Model B, Plugged, Yoke
DDE A9602609801RB	DDE R23565079	Range Model B, Oil Cooler Fitting, Yoke
DDE A9602609901RB	DDE R23565080	Range Model A, Plugged, Yoke

Table 1 – Transmission And Rear Range Housing Part Numbers

Corrective Procedure

1. Park the vehicle on a level surface, turn off the ignition, set the parking brake, chock the wheels, and perform any other applicable safety steps.

WARNING:

PERSONAL INJURY

To avoid injury from hot surfaces, wear protective gloves, or allow transmission to cool before removing any component.

CAUTION:

ELECTRICAL SHOCK

To avoid injury from electrical shock, use care when connecting battery cables. The magnetic switch studs are at battery voltage.

2. Disconnect the batteries at the negative post, including the batteries for the auxiliary HVAC, if equipped.

3. Perform a transmission fluid inspection. **REFERENCE** chapter “Symptom Diagnostics-Transmission Fluid Inspection” and section “Transmission Fluid Inspection” in the *Detroit Transmission Manual* (DDC-SVC-MAN-0140). Is there a normal amount of metal on the magnetic drain plugs and fluid screen?

a. Yes; there is a normal amount of metal on the magnetic drain plugs and fluid screen, proceed to step 4.
b. No; there is an abnormal amount of metal on the magnetic drain plugs and fluid screen, replace the transmission. **REFERENCE** chapter “DT12 Transmission” and sections “Removal of the Transmission” and “Installation of the Transmission” in the *Detroit Transmission Manual* (DDC-SVC-MAN-0140). Proceed to step 39.

4. Remove the transmission. **REFERENCE** chapter “DT12 Transmission” and section “Removal of the Transmission” in the *Detroit Transmission Manual* (DDC-SVC-MAN-0140).

5. Remove the air fittings connected to the range cylinder (4). See Figure 1.

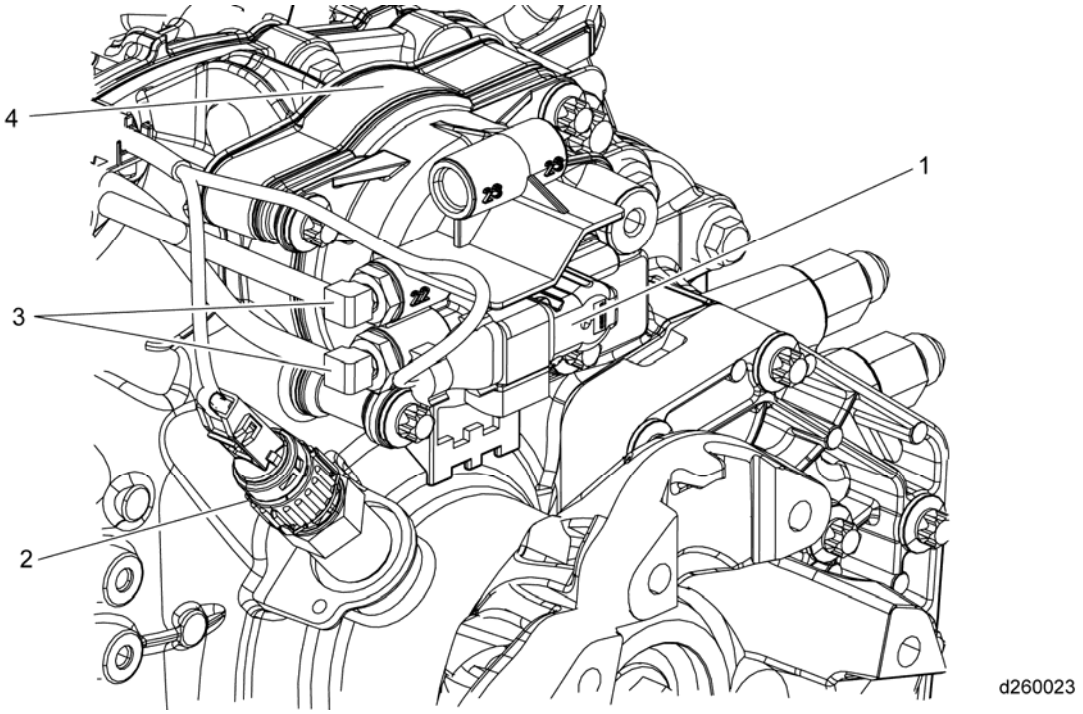

Figure 1 – Range Cylinder Air Lines

6. Disconnect the range position sensor (1) and output shaft speed sensor (2) from the transmission wiring harness. See Figure 1.

7. Remove the air line (3) and wire harness raceway. See Figure 1.

WARNING:

EYE INJURY

To avoid injury from flying parts when working with components under spring tension, wear adequate eye protection (face shield or safety goggles).

NOTICE:
The range detent spring is under pressure, and must be held back to prevent the spring from catapulting the shift fork detent spring nut, possibly causing thread damage to the case and potential injury from flying parts.

8. Remove the range shift fork detent spring nut cap (1). As the nut is removed, push in with enough force to prevent the spring from catapulting the nut. After the spring is removed, remove the range detent shaft. See Figure 2.

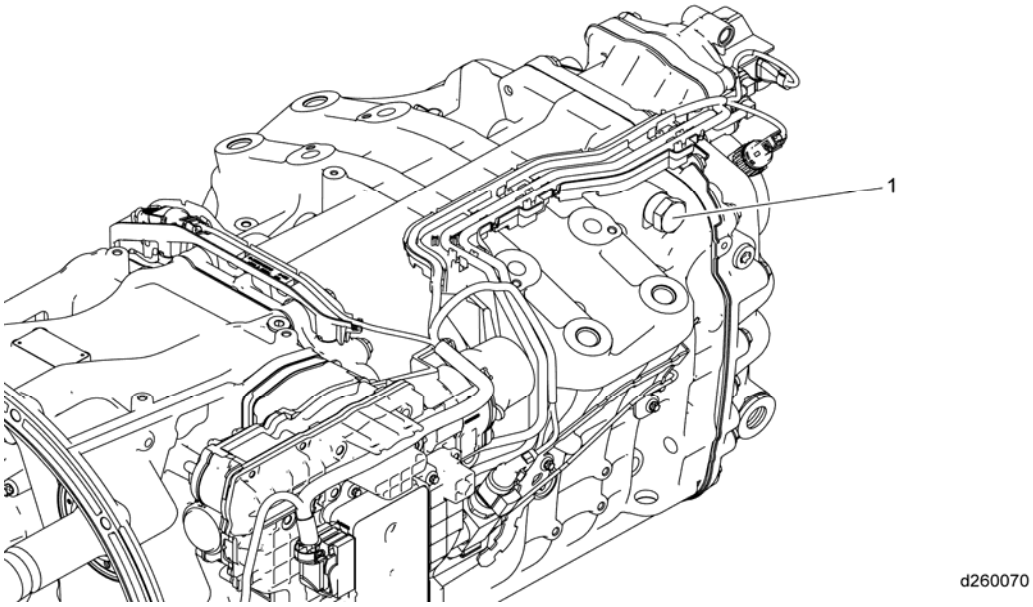

Figure 2 – Range Shift Fork Detent Spring Nut Cap

9. For A-box transmissions only, remove the top two bolts on the range housing bolting flange, and install the lifting eye (special tool DDE W 715 589 00 40 00). B-box transmissions have an integrated lift eye in the range housing casting. See Figure 3.

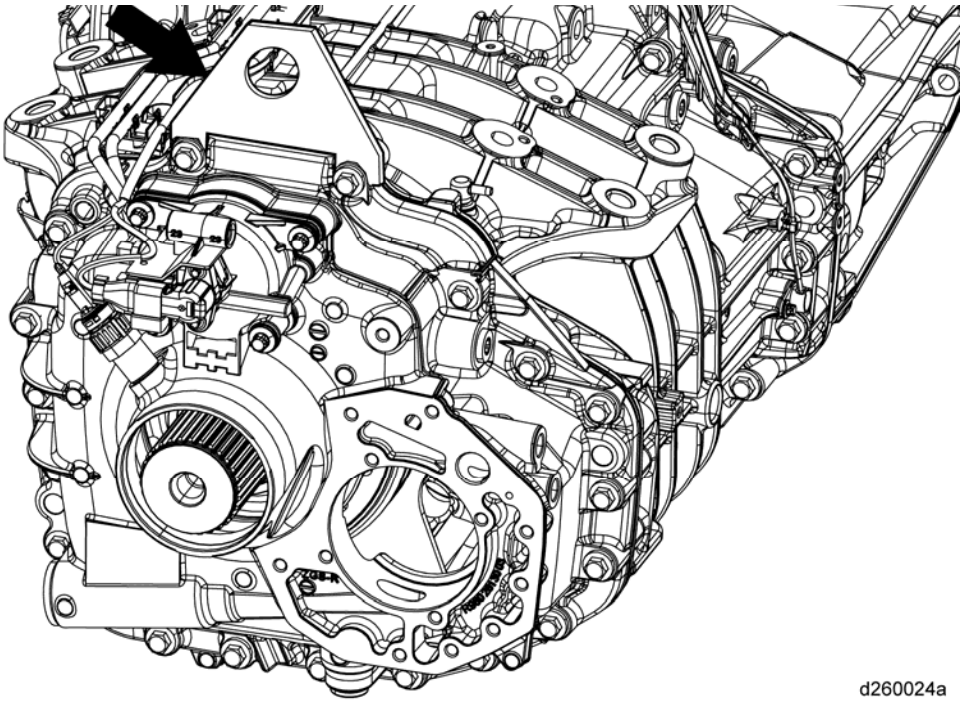

Figure 3 – Lifting Eye (special tool DDE W 715 589 00 40 00) Installed

10. Remove the cap screws that attach the oil pump cover to the transmission housing. Remove the oil pump cover. See Figure 4.

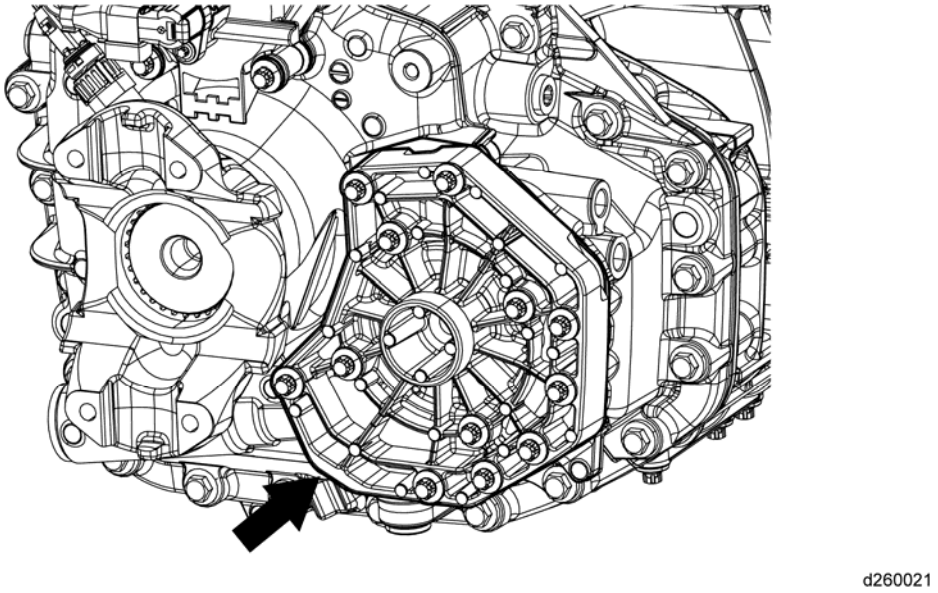

Figure 4 – Oil Pump Cover

11. Remove the oil pump relief valve (1), oil pump drive shaft (3), and pump rotors. See Figure 5.

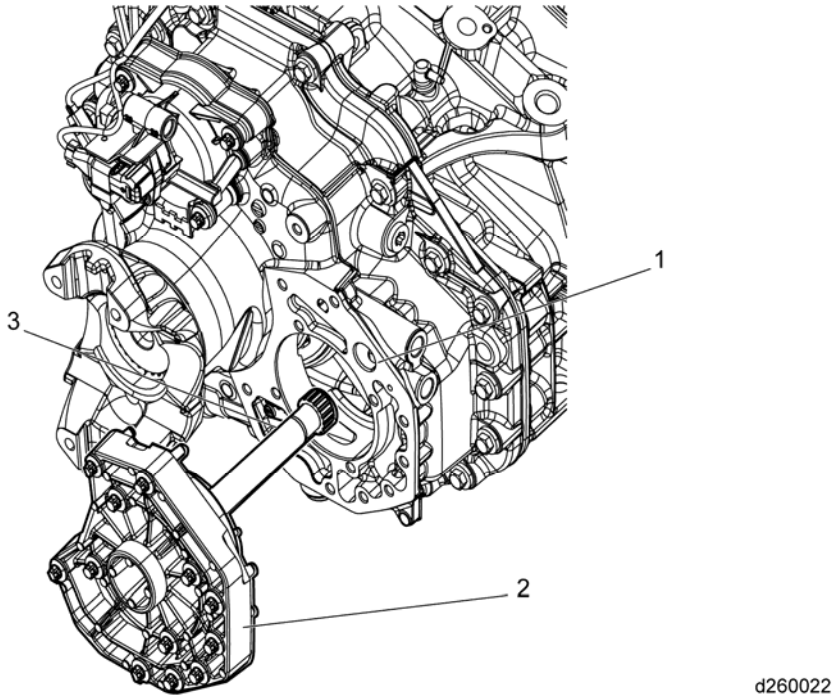

Figure 5 – Oil Pump Relief Valve And Drive Shaft

12. Attach the lifting device and then remove the remaining fasteners.

13. Install guide pins. See Figure 6.

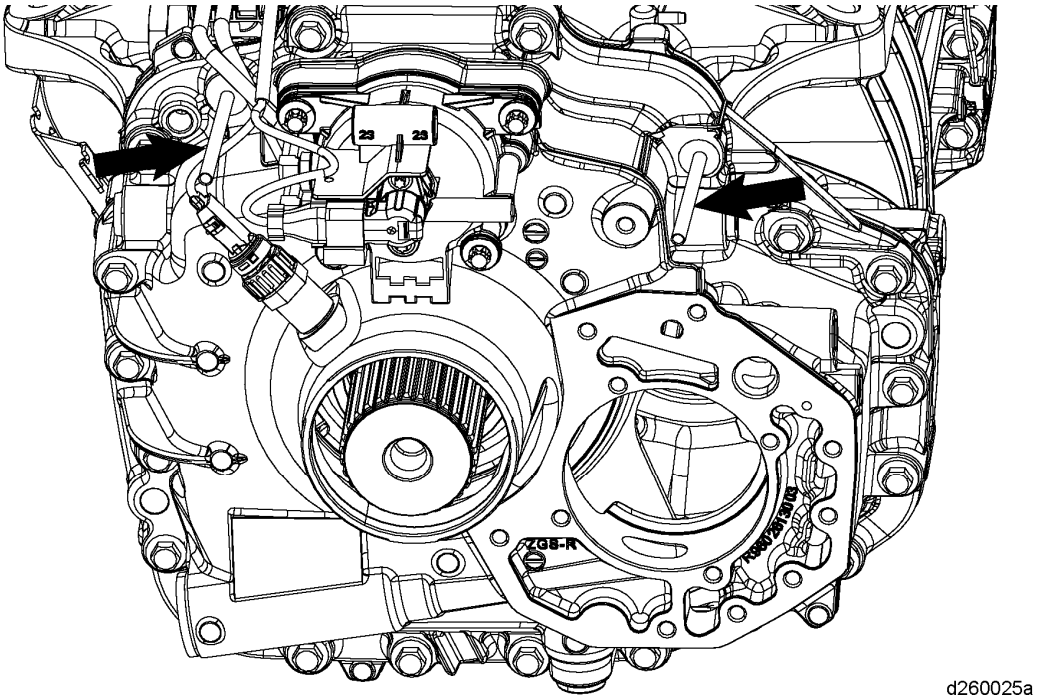

Figure 6 – Guide Pins

14. Install the kit of three set screws and pushing screws (special tool DDE W 715 589 14 33 00). See figure below for pushing screw locations. Turn all three screws in even, incremental steps, to push the housing off the dowel pins. While the housing is being pushed back, the planetary housing flange may tend to bind on the alignment dowels. Take steps to keep the flange parallel to the housing face to ease the removal of the housing. See Figure 7.

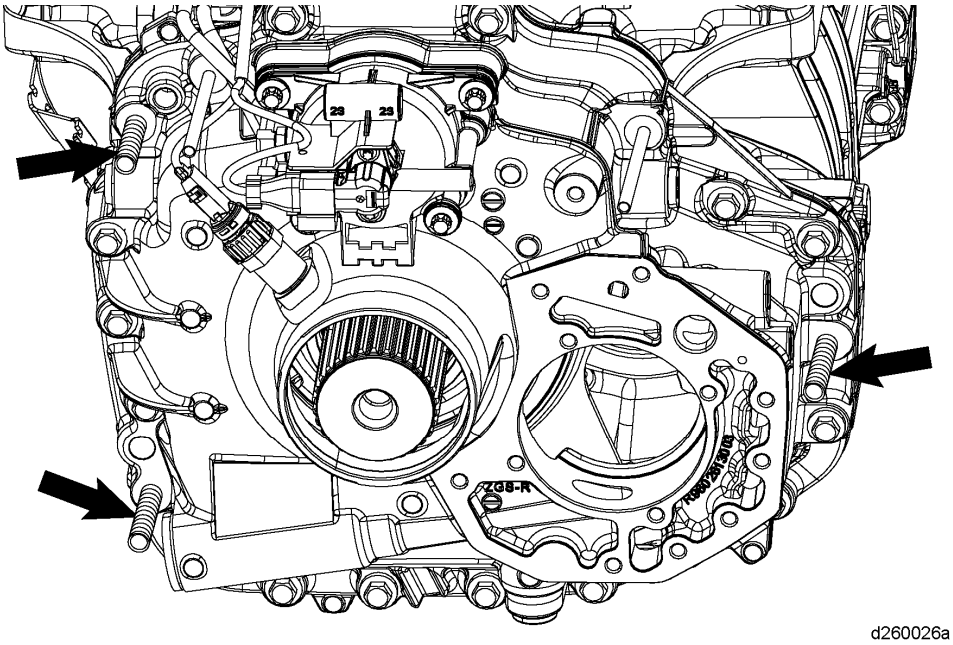

Figure 7 – Pushing Screw Locations

15. The planetary guide dowels may pull out from the case upon removal; if necessary, gently reseat the guide dowels back into the case. See Figure 8.

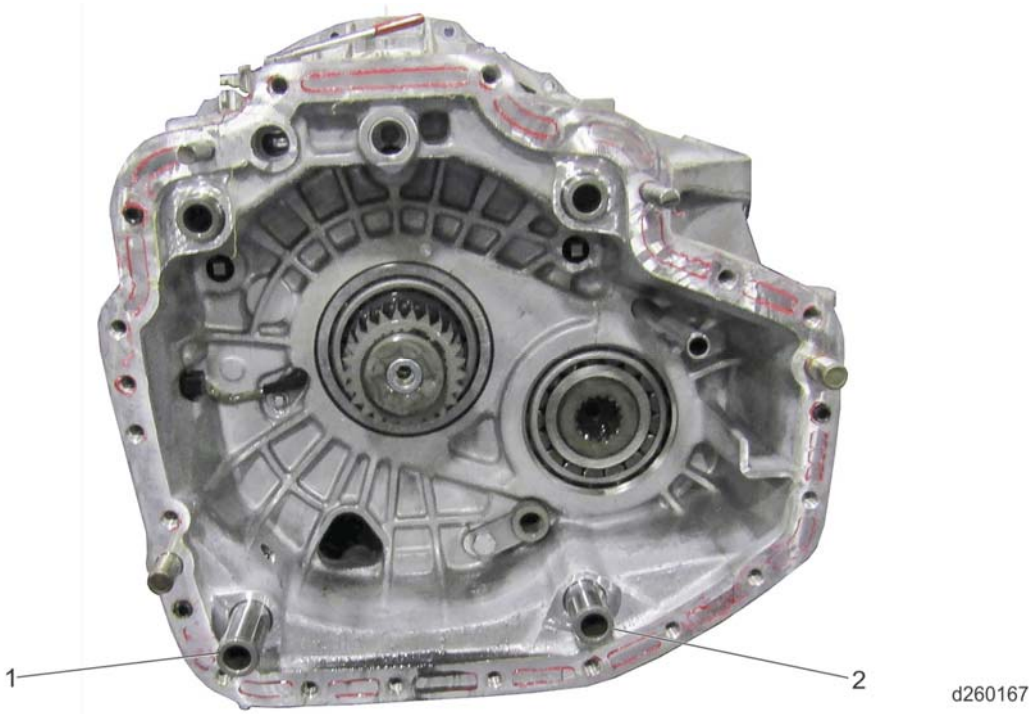

Figure 8 – Guide Dowels

16. Remove the pushing screws and set screws. See Figure 7.

17. Clean the housing flanges and threaded holes.

18. Remove the sun gear snap ring and gear.

19. Install the new sun gear and snap ring. Read note below before installing to ensure proper gear orientation. See Figures 9 and 10.

NOTICE: The location of the oil groove, holes in the sun gear, and the oil holes in the main shaft need to be aligned to supply oil between the sun and planet gears of the range group. Install the sun gear with the flat side facing out towards the snap ring groove is shown below (See callout A). The sun gear with the beveled spline side facing inwards towards the center case is shown below (See callout B).
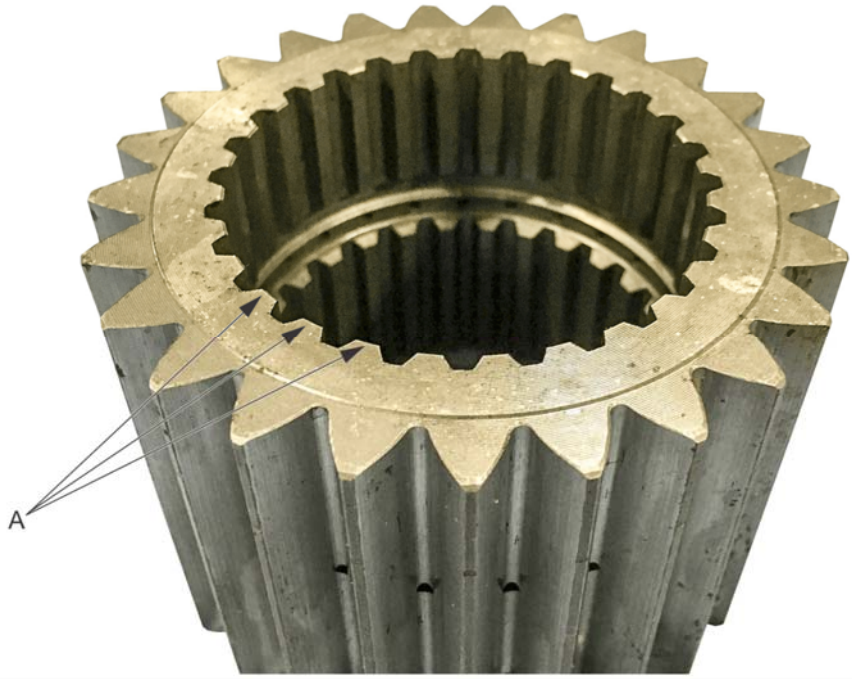

Figure 9 – Sun Gear With The Flat Side Facing Out Towards The Snap Ring Groove

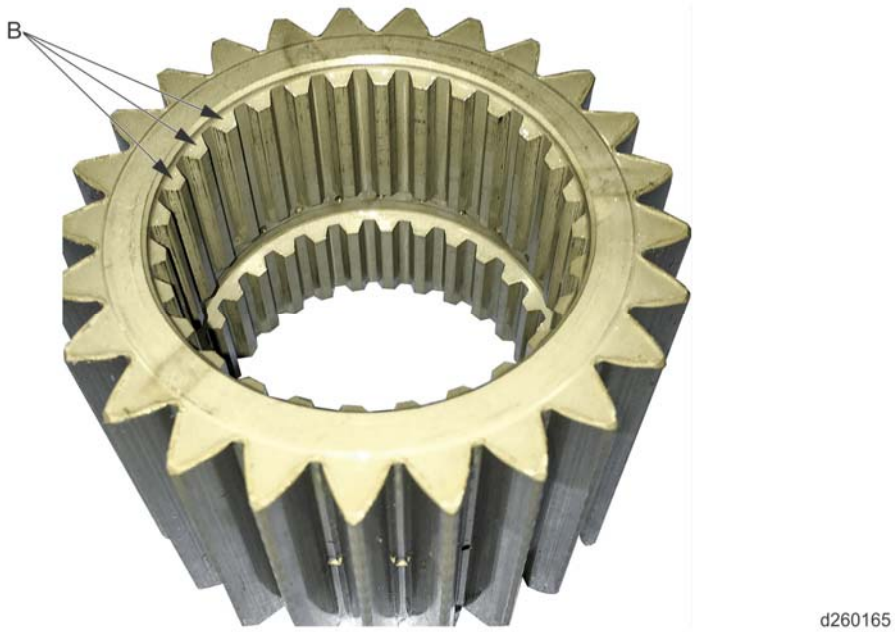

Figure 10 – Sun Gear with The Beveled Spline Side Facing In Towards The Center Case

20. Apply Loctite® 518 sealant to the flange on the range group.

21. Align the range housing on the guide bolts and slide the range housing into position while engaging the flange of the planetary carrier on the guide pins. Use the flange bolts to evenly pull the range box onto the dowel pins.

22. Torque the range housing flange bolts to 80 N·m (59 lb·ft).

23. Apply Loctite® 243 or 248 to the threads of the range shift fork detent spring nut cap and reinstall the detent, spring and nut cap into the transmission. You will need to push on the nut cap towards the transmission to compress the spring (80 lbs) when installing it. Tighten the nut cap to 60 N·m (44 lb·ft). See Figure 11.

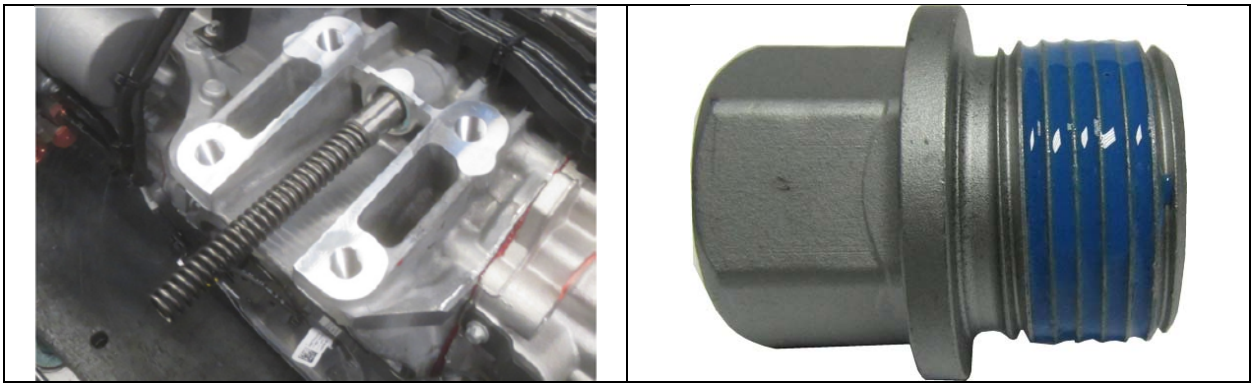

Figure 11 – Installation Of Range Shift Fork Detent Spring Nut Cap

24. Install the harness raceway, and tighten to 10 N·m (90 lb·in.).

25. Install the range shift air lines, and torque it to 12 N·m (105 lb·in.).

26. Install the wire harness connections for the output shaft speed sensor, and range position sensor. If any zip ties were removed during the procedure, replace those zip ties.

27. Install the oil pump drive shaft. Make sure the rotors have the sides with the dot (A) facing the oil pump cover. See Figure 12.

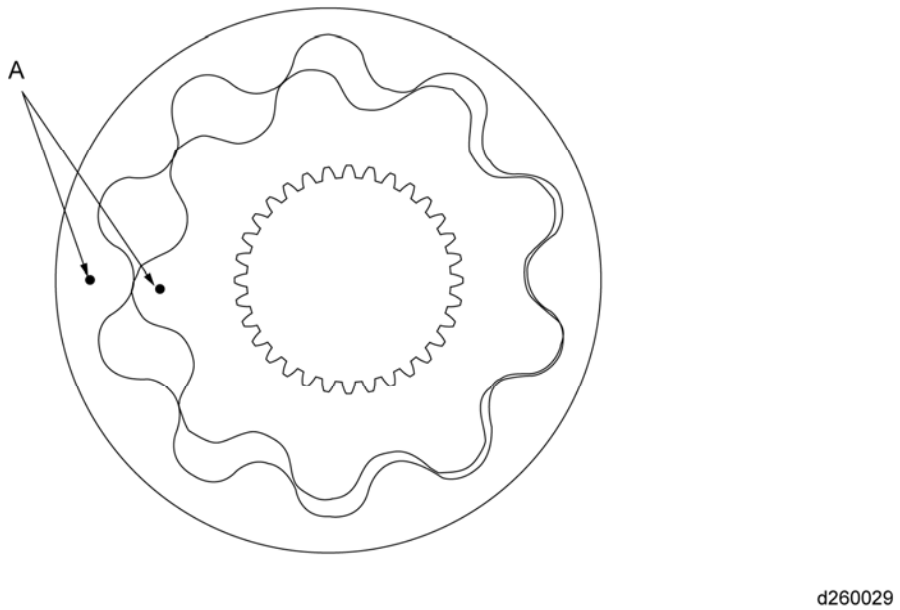

Figure 12 – Installation of Oil Pump Rotors

28. Clean the bore for the oil control valve. This helps the O-ring retain the relief spring force while the pump cover is being installed.

NOTICE:
On oil-cooler-equipped transmissions, align the pressure relief valve locating dowel, with the hole on the cover. The correct pin location is approximately the 9 o’clock position

29. Apply Loctite® 518 sealant to the oil pump cover mating surface.

30. Install the oil pump relief valve. See Figure 13 and Table 2.

A	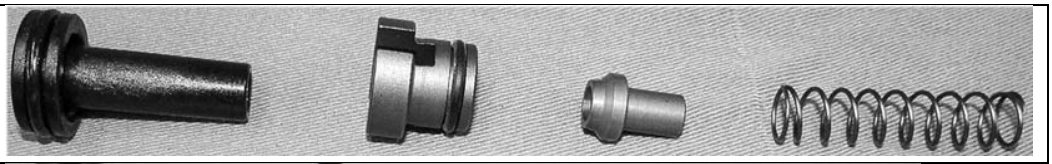
B	
C	

Figure 13 – Oil Pump Relief Valve

A	**Transmission Without An Oil Cooler (Previous Design)**
B	**Transmission Without An Oil Cooler (Current Design)**
C	**Transmission With An Oil Cooler**

Table 2 – Oil Pump Relief Valve

31. Install the oil pump cover, and apply medium strength Loctite® 248 to the bolts. Tighten the bolts evenly to 50 N·m (37 lb·ft).

NOTICE:
The drilling process is only required to allow the head of the rivet to break off easily. Do not drill into the rivet more than 0.1”.

32. Using a 3/32” bit, drill the rivets on the Identification Tag on the old range housing. See Figure 14.

33. Gently pry off the Identification Tag for transfer to the new range housing. See Figure 14.

Figure 14 – Identification Tag Removal

34. Thoroughly clean and dry the Identification Tag area on the new range housing.

35. Install the Identification Tag on the new range housing by applying some RTV sealant to the back, and hammering the U-Drive rivets, included with the remanufactured range housing, into position. See Figure 15.

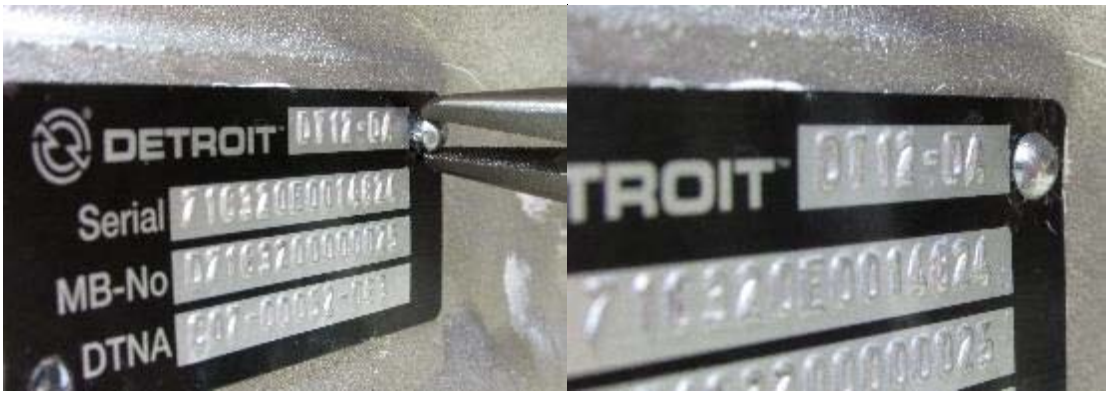

Figure 15 – Identification Tag Installation

36. Install the transmission. **REFERENCE** chapter “DT12 Transmission” and section “Installation of the Transmission” in the *Detroit Transmission Manual* (DDC-SVC-MAN-0140).

37. Fill the transmission with oil.

38. Connect to DiagnosticLink® 8.07 or higher, and under the Actions menu →Transmission →perform a transmission learn routine.

39. The repair is complete.

Notice
Claim administration time, SRT 939-6010A, for 0.3 hours will automatically be added. No additional operation is required or will be allowed

Warranty Information

Truck Model	**Claim Type:**	**CAMPAIGN**
	Modification	**D18M4**
	Cause Code:	**A1-CAMPAIGN**
	Primary Failed Part:	**A9602609901RB**
Cascadia	**Labor Code:**	**996-F016A – RANGE GROUP, REMAN, UPDATE (MY18M4)**
	Labor:	**8.0 Hours**
Western Star	**Labor Code:**	**996-F016A – RANGE GROUP, REMAN, UPDATE (MY18M4)**
	Labor:	**9.0 Hours**
Cascadia	**Labor Code:**	**996-F016B – RANGE GROUP, REMAN, INSPECT & REPLACE TRANSMISSION (MY18M4)**
	Labor:	**6.6 Hours**
Western Star	**Labor Code:**	**996-F016B – RANGE GROUP, REMAN, INSPECT & REPLACE TRANSMISSION (MY18M4)**
	Labor:	**7.6 Hours**
	Parts Return:	**RETURN**

Please contact the Detroit™ Customer Support Center at 800-445-1980 or email csc@daimler.com if you have any questions.

DETROIT DIESEL
13400 Outer Drive West
Detroit, Michigan 48239-4001