PARTS LIST

SOFTEK® Front Suspension System for Lion Bus

LIT NO: SP-312
DATE: November 2018 **REVISION:** B

CONTENTS

DESCRIPTION	PAGE
SOFTEK equipped with Drum Brakes	2
SOFTEK equipped with Disc Brakes	4
Special Tool	6

SOFTEK® with Drum Brakes

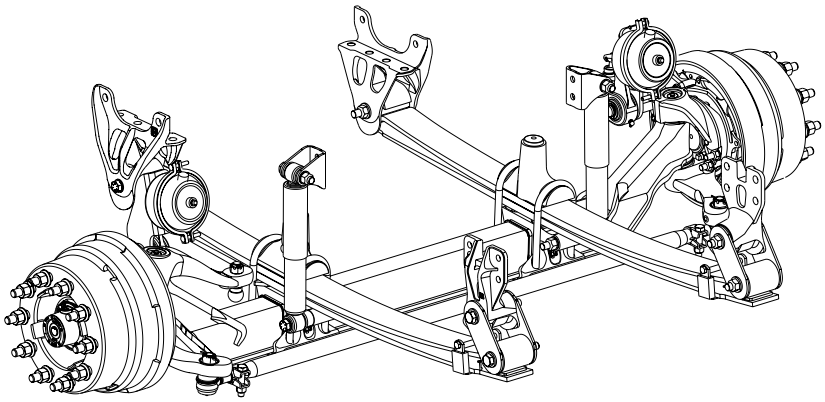

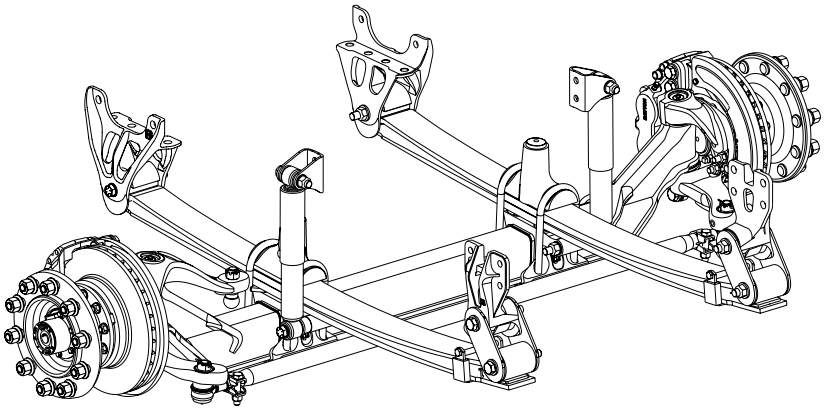

SOFTEK® with Disc Brakes

HENDRICKSON
The World Rides On Us®

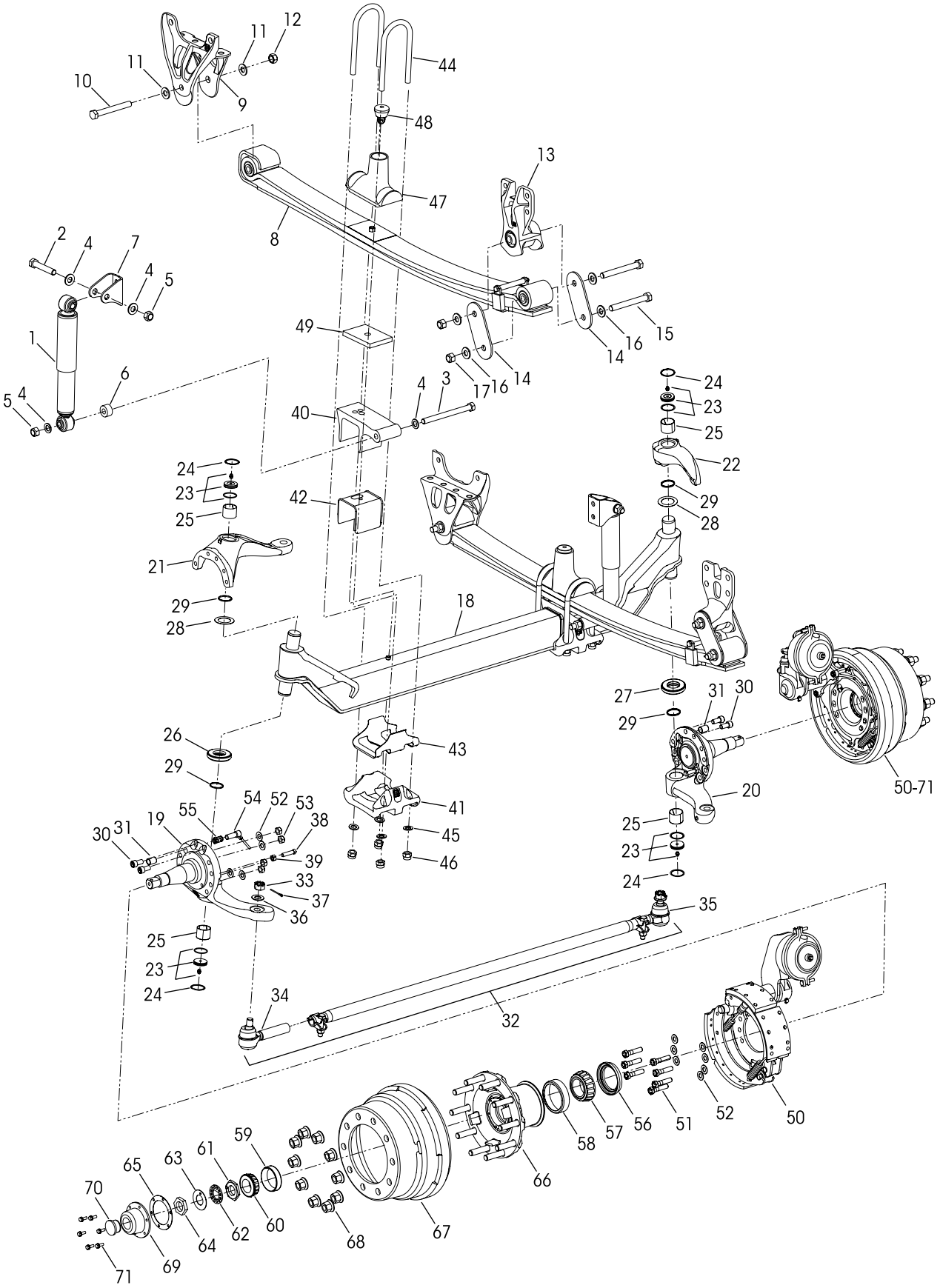
1
2
3
4
5
6
7
8
9
10
11
12
13
14
15
16
17
18
19
20
21
22
23
24
25
26
27
28
29
30
31
32
33
34
35
36
37
38
39
40
41
42
43
44
45
46
47
48
49
50
50-71
51
52
53
54
55
56
57
58
59
60
61
62
63
64
65
66
67
68
69
70
71

KEY NO.	PART NO.	DESCRIPTION	VEHICLE QTY.
1	58913-009L	Shock Absorber	2
2	58917-001	¾"-10 UNC x 4¼" Upper Shock Bolt	2
3	58917-016	¾"-10 UNC x 8½" Lower Shock Bolt	2
4	22962-001	¾" Hardened Washer	8
5	49842-000	¾"-10 UNC Hex Locknut	4
6	59946-001	Shock Spacer	2
7	59423-002	Shock Bracket	2
	60961-162	**Leaf Spring Assembly Service Kit,** Includes Key Nos. 8, 13-14	
8	53624-000	Leaf Spring Assembly	2
9	64488-002	Front Hanger	2
10	58258-008	M20 x 160 mm Hex Bolt	2
11	58246-004	M20 Hardened Washer	4
12	58259-000	M20 Locknut	2
13	66510-001	Rear Shackle Bracket Assembly	2
14	64314-000	Rear Shackle Plate	4
15	58258-008	M20 x 160 mm Hex Bolt	4
16	58246-004	M20 Hardened Washer	8
17	58259-000	M20 Locknut	4
	64502-048	STEERTEK Axle Assembly w/Brake Assembly, Includes Key Nos. 18-43, 50-72	
18	64905-001	Axle & Kingpin Assembly	1
		Lower Steering Knuckle Assembly, Includes Key Nos. 25, 29, 31	
19	58900-027	Left Hand	1
20	58900-028	Right Hand	1
		Upper Steering Knuckle Assembly, Includes Key Nos. 25, 29	
21	60903-034	Left Hand, *Replaces 60903-004*	1
22	60904-002	Right Hand	1
		Kingpin Bushing and Bearing Service Kits	
	60961-040	**Axle Set,** Includes Kit Nos. 60961-009 & -039	
	60961-009	**Left Hand w/Composite Thrust Bearing,** Includes Key Nos. 23-26, 28-30 and Loctite	
	60961-039	**Right Hand w/Roller Thrust Bearing,** Includes Key Nos. 23-25, 27-30 and Loctite	
23	59156-000	Grease Cap Assembly	4
24	58937-000	Retaining Ring	4
25	58909-000	Kingpin Bushing	4
		Thrust Bearing Service Kits	
	60961-043	**Axle Set,** Includes Kit Nos. 60961-041 & -042	
	60961-041	**Left Hand Composite Thrust Bearing,** Includes Key Nos. 26, 28-30 and Loctite	
	60961-042	**Right Hand Roller Thrust Bearing,** Includes Key Nos. 27-30 and Loctite	
26	59828-000	LH Composite Thrust Bearing	1
27	64256-000	RH Roller Thrust Bearing	1
28		Kingpin Shim	As Req.
	60259-001X	0.005" Thickness (Pack of 4)	
	60259-002	0.047" Thickness	
29	58910-001	Kingpin Seal	4
30	60236-001	⅝"-11 UNC Socket Head Cap Screw	4
	60937-000	Loctite (Red) Compound Tube (Not Shown)	1
31	64246-000	ABS Sensor Sleeve	2
32	76877-003	Tie Rod Assembly, Includes Key Nos. 33-35	1
33		*⅞" Castle Nut	2
		Tie Rod End Service Kits	
	60961-734	**Axle Set,** Includes LH and RH Service Kits	
	60961-736	**Left Hand,** Includes Key Nos. 34, 36-37	
	60961-741	**Right Hand,** Includes Key Nos. 35-37	

KEY NO.	PART NO.	DESCRIPTION	VEHICLE QTY.
		Tie Rod Ends, 1⅛" Threads	
34	70995-001	Left Hand	1
35	70995-002	Right Hand	1
36	22962-007	⅞" Flat Washer	2
37	17800-004	Tie Rod Nut Cotter Pin	2
	60961-069	**Stop Bolt Service Kit, One Side,** Includes Key Nos. 38-39	
38	60238-001	½"-13 UNC x 2" Square Head Bolt	2
39	60240-000	½"-13 UNC Hex Jam Nut	2
40	59952-003	Top Axle Wrap	2
41	64722-003	Bottom Axle Wrap	2
42	60508-000	Top Axle Wrap Liner	2
43	59845-000	Bottom Axle Wrap Liner	2
	60961-140	**Clamp Group Service Kit, One side,** Includes Key Nos. 44-46	
44	64804-110	¾"-16 UNF x 11" U-bolt	4
45	22962-001	¾" Flat Washer	8
46	17700-035	¾"-16 UNF 2B Nylon Locknut	8
	64506-000	Top Pad/Axle Stop Assembly Includes Key Nos. 47-48	
47	64519-000	Top Pad	2
48	64080-000	Rubber Axle Stop	2
49	70105-010	Front Axle Spacer - 10 mm	2
50		**Meritor Drum Brake Assembly, 15" x 4"	
		Left Hand Part No. QP4-1540-3085	1
		Right Hand Part No. QP4-1540-3086	1
51	32043-002	⅝"-11 UNC x 2¾" Hex Bolt	14
52	22962-036	⅝" Hardened Washer	22
53	47764-000	⅝"- UNC Locknut	8
54	64547-000	ABS Sensor	2
55	64550-000	ABS Sensor Clip	2
56		**Federal Mogul Wheel Seal Kit No. M380001TX0	2
		**Timken Inner Bearing One side, Set No. 413, Includes Key Nos.57-58	
57		Inner Bearing Cone	2
58		Inner Bearing Cup	2
		**Timken Outer Bearing One Side, Set No. 406, Includes Key Nos.59-60	
59		Outer Bearing Cup	2
60		Outer Bearing Cone	2
61		**Meritor 1½"-12 UNF Inner Wheel Bearing Adj. Nut Part No. 1227-U-541	2
62		**Meritor 3/16" Wheel End Lock Ring Part No. 1229-G-475	2
63		**Meritor 0.05" Wheel End Lock Washer Part No. 1229-F-474	2
64		**Meritor Wheel End Outer Nut No. 1227-B-106	2
65		**Stemco Hubcap Gasket Part No. 330-3024	2
66		**Webb Hub Part No. 25201–1T	2
67		**Webb Drum Part No. 65545B	2
68		***M22 x 1.5 Two-piece Wheel Nut	20
69		**Stemco Hubcap Assembly - 6", Kit No. 343-4346, Includes Key No. 70	2
70		*Rubber Plug	2
71	64545-002	5/16"-18 UNC x ¾" Hex Bolt w/Retainer Washer (Hubcap Bolts)	12

For all (*) see Notes on Page 6

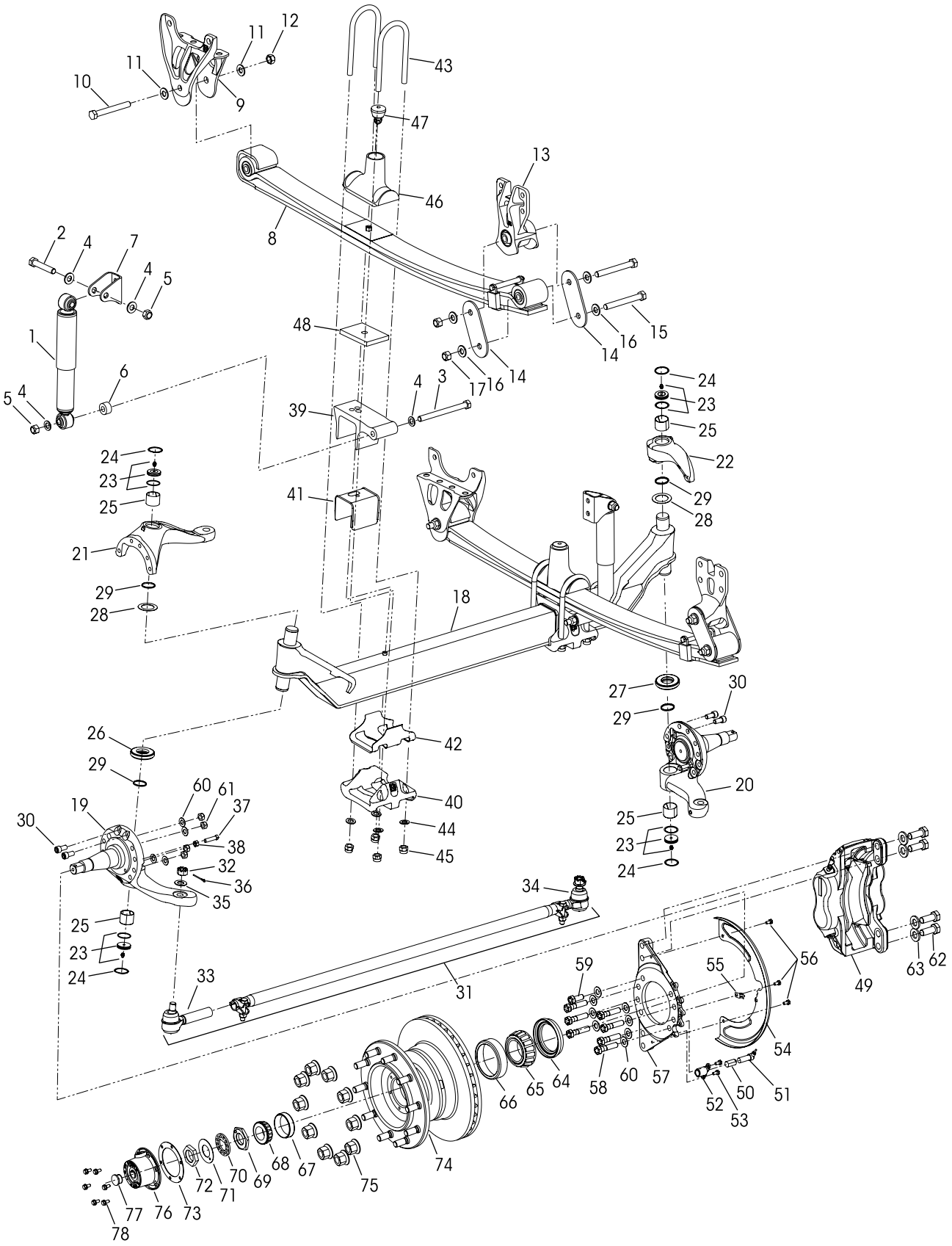
1
2
3
4
5
6
7
8
9
10
11
12
13
14
15
16
17
18
19
20
21
22
23
24
25
26
27
28
29
30
31
32
33
34
35
36
37
38
39
40
41
42
43
44
45
46
47
48
49
50
51
52
53
54
55
56
57
58
59
60
61
62
63
64
65
66
67
68
69
70
71
72
73
74
75
76
77
78

KEY NO.	PART NO.	DESCRIPTION	VEHICLE QTY.
1	58913-009L	Shock Absorber	2
2	58917-001	¾"-10 UNC x 4¼" Upper Shock Bolt	2
3	58917-016	¾"-10 UNC x 8½" Lower Shock Bolt	2
4	22962-001	¾" Hardened Washer	8
5	49842-000	¾"-10 UNC Hex Locknut	4
6	59946-001	Shock Spacer	2
7	59423-002	Shock Bracket	2
	60961-162	**Leaf Spring Assembly Service Kit,** Includes Key Nos. 8, 13-14	
8	53624-000	Leaf Spring Assembly	2
9	64488-002	Front Hanger	2
10	58258-008	M20 x 160 mm Hex Bolt	2
11	58246-004	M20 Hardened Washer	4
12	58259-000	M20 Locknut	2
13	66510-001	Rear Shackle Bracket Assembly	2
14	64314-000	Rear Shackle Plate	4
15	58258-008	M20 x 160 mm Hex Bolt	4
16	58246-004	M20 Hardened Washer	8
17	58259-000	M20 Locknut	4
		STEERTEK Axle Assembly w/Brake Assembly, Includes Key Nos. 18-42, 49-65, 68-78	
	64502-050	Vehicles built **AFTER** July 20, 2017	
	64502-049	Vehicles built **PRIOR TO** July 20, 2017	
18	64905-001	Axle & Kingpin Assembly	1
		Steering Knuckle Assembly, Includes Key Nos. 25, 29	
19		Left Hand Lower	1
	58900-053	Vehicles built **AFTER** July 20, 2017	
	58900-061	Vehicles built **PRIOR TO** July 20, 2017	
20		Right Hand Lower	1
	58900-054	Vehicles built **AFTER** July 20, 2017	
	58900-062	Vehicles built **PRIOR TO** July 20, 2017	
21	60903-034	Left Hand Upper, *Replaces 60903-004*	1
22	60904-002	Right Hand Upper	1
		Kingpin Bushing and Bearing Service Kits	
	60961-040	**Axle Set,** Includes Kit Nos. 60961-009 & -039	
	60961-009	**Left Hand w/Composite Thrust Bearing,** Includes Key Nos. 23-26, 28-30 and Loctite	
	60961-039	**Right Hand w/Roller Thrust Bearing,** Includes Key Nos. 23-25, 27-30 and Loctite	
23	59156-000	Grease Cap Assembly	4
24	58937-000	Retaining Ring	4
25	58909-000	Kingpin Bushing	4
		Thrust Bearing Service Kits	
	60961-043	**Axle Set,** Includes Kit Nos. 60961-041 & -042	
	60961-041	**Left Hand Composite Thrust Bearing,** Includes Key Nos. 26, 28-30 and Loctite	
	60961-042	**Right Hand Roller Thrust Bearing,** Includes Key Nos. 27-30 and Loctite	
26	59828-000	Left Hand Composite Thrust Bearing	1
27	64256-000	Right Hand Roller Thrust Bearing	1
28		Kingpin Shim	As Req.
	60259-001X	0.005" Thickness (Pack of 4)	
	60259-002	0.047" Thickness	
29	58910-001	Kingpin Seal	4
30	60236-001	⅝"-11 UNC Socket Head Cap Screw	4
	60937-000	Loctite (Red) Compound Tube (Not Shown)	1
31		Tie Rod Assembly, 1⅛" Threads, Includes Key Nos. 32-34	1
	76877-002	Vehicles built **AFTER** July 20, 2017	
	76877-003	Vehicles built **PRIOR TO** July 20, 2017	
32		*⅞" Castle Nut	2
		Tie Rod End Service Kits	
	60961-734	**Axle Set,** Includes 60961-736 and 60961-741	
	60961-736	**Left Hand,** Includes Key Nos. 33, 35-36	
	60961-741	**Right Hand,** Includes Key Nos. 34-36	
		Tie Rod End, 1⅛" Threads	
33	70995-001	Left Hand	1
34	70995-002	Right Hand	1

KEY NO.	PART NO.	DESCRIPTION	VEHICLE QTY.
35	22962-007	⅞" Flat Washer	2
36	17800-004	Tie Rod Nut Cotter Pin	2
	60961-069	**Stop Bolt Service Kit, One Side,** Includes Key Nos. 37-38	
37	60238-001	½"-13 UNC x 2" Square Head Bolt	2
38	60240-000	½"-13 UNC Hex Jam Nut	2
39	59952-003	Top Axle Wrap	2
40	64722-003	Bottom Axle Wrap	2
41	60508-000	Top Axle Wrap Liner	2
42	59845-000	Bottom Axle Wrap Liner	2
	60961-140	**Clamp Group Service Kit, One side,** Includes Key Nos. 43-45	
43	64804-110	¾"-16 UNF x 11" U-bolt	4
44	22962-001	¾" Flat Washer	8
45	17700-035	¾"-16 UNF 2B Nylon Locknut	8
	64506-000	Top Pad/Axle Stop Assembly Includes Key Nos. 46-47	
46	64519-000	Top Pad	2
47	64080-000	Rubber Axle Stop	2
48	70105-010	Front Axle Spacer - 10 mm	2
49		**Meritor Brake Caliper Assembly Left Hand Part No. 60450482007 Right Hand Part No. 60450483007	2
50		**Wabco ABS Sensor Clip Part No. 300088	2
51		**Wabco ABS Sensor Part No. 441 032 814 0	2
52		**Meritor ABS Bracket Part No. 69180466	2
53	18160-012	5/16"-18 UNC x ½" Bolt (ABS Bracket)	4
54		**Meritor Dust Shield Part No. 3264W1453	2
55		**Meritor Dust Shield Clip Part No. 2257V1270	2
56	64201-001	M8 x 1¼"-6G Cap Screw (Dust Shield)	6
57		**Meritor Torque Plate Left Hand Part No. 69120952 Right Hand Part No. 69120951	2
58	32043-002	⅝"-11 UNC x 2¾" Hex Bolt (Torque Plate)	14
59	32043-021	⅝"-11 UNC x 1½" Hex Bolt (Torque Plate)	2
60	22962-036	⅝" Hardened Washer (Torque Plate)	24
61	47764-000	⅝"-11 UNC Locknut (Torque Plate)	8
62	58258-017	M20 x 2.5-6G Hex Bolt (Caliper)	8
63	58246-018	M20 Hardened Washer (Caliper) *Replaces 58246-009*	8
64		**Federal Mogul Wheel Seal Kit No. M380001TX0	2
		**Timken Inner Bearing One side, Set No. 413, Includes Key Nos.65-66	
65		Inner Bearing Cone	2
66		Inner Bearing Cup	2
		**Timken Outer Bearing One Side, Set No. 406, Includes Key Nos. 67-68	
67		Outer Bearing Cup	2
68		Outer Bearing Cone	2
69		**Meritor 1½"-12 UNF Inner Wheel Bearing Adj. Nut Part No. 1227-U-541	2
70		**Meritor 3/16" Wheel End Lock Ring Part No. 1229-G-475	2
71		**Meritor 0.05" Wheel End Lock Washer Part No. 1229-F-474	2
72		**Meritor Wheel End Outer Nut No. 1227-B-106	2
73		**Stemco Hubcap Gasket Part No. 330-3024	2
74		**Meritor Hub & Rotor Assembly, Steel Hub 15.38 x 1.54 Rotor Part No. 17160671003	2
75		***M22 x 1.5 Two-piece Wheel Nut	20
76		**Stemco Hubcap Assembly - 6", Kit No. 343-4346, Includes Key No. 77	2
77		*Rubber Plug	2
78	64545-002	5/16"-18 UNC x ¾" Hex Bolt w/Retainer Washer (Hubcap Bolts)	12

For all (*) see Notes on Page 6

■ Special Tool

KINGPIN BUSHING TOOL – ADJUSTABLE STRAIGHT FLUTE REAMER

The dimension of cutting diameter must facilitate a range of **1.802"-1.812"**

NOTE: * Item included in assembly only, part not sold separately.

** Not supplied by Hendrickson for aftermarket service purposes. Description and part number listed for reference only. For more information and assistance with service, maintenance and rebuild instructions on these components see below component manufacturers:

- Federal Mogul Tech and Part Support 800.325.8886 or www.fme-cat.com
- Meritor Tech and Part Support 888.725.9355, for parts www.meritorpartsexpress.com and for tech support www.meritorbullpen.com
- Stemco Tech and Part Support 800.527.8492 or www.stemco.com
- Timken at Tech and Part Support 866.984.6536 or www.timken.com/resources or Timken Youtube series, Timken Tricks of the Trade (Installing a Timken® Set-Right® Bearing)
- WABCO Tech and Part Support 855.228.3203 or www.wabco-auto.com/aftermarket-services/inform-product-catalog

*** Not supplied by Hendrickson, used for reference only. Contact the vehicle manufacturer for more information.

This is a general parts list to provide directional information. Components may vary by model. Questions in regards to parts, contact Hendrickson Truck Parts at 1.866.755.5968 (Toll-free U.S. and Canada), 630.910.2800 (Outside U.S. and Canada) or e-mail: truckparts@hendrickson-intl.com.

www.hendrickson-intl.com

HENDRICKSON®

Truck Commercial Vehicle Systems
800 South Frontage Road
Woodridge, IL 60517-4904 USA

1.866.755.5968 (Toll-free U.S. and Canada)
1.630.910.2800 (Outside U.S. and Canada)
Fax 1.630.910.2899

"HENDRICKSON", the "H" logo and other Hendrickson marks designated with the "®" symbol are registered trademarks of Hendrickson USA, L.L.C. in the United States and certain other countries.

Information contained in this literature was accurate at the time of publication. Product changes may have been made after the copyright date that are not reflected.
© 2017-2018 Hendrickson USA, L.L.C. All Rights Reserved

Printed in United States of America