TECHNICAL PROCEDURE

OPTIMAAX® Liftable Forward Tandem Axle and Suspension System for Freightliner Vehicles

SUBJECT: Service Instructions
LIT NO: 17730-309
DATE: November 2018 **REVISION:** A

TABLE OF CONTENTS

Section 1 Introduction 2

Section 2 Product Description 3

Section 3 Important Safety Notice 4

Section 4 Special Tools 9

Section 5 Parts List 10

Section 6 Preventive Maintenance

Hendrickson Recommended Inspection Intervals 12

Component Inspection 12

Frame Hanger 13

Axle beam Assembly End Hub 13

TRI-FUNCTIONAL Bushing 14

Thrust Washers 16

Tire Inspection 17

Shock Absorber 19

Section 7 Alignment & Adjustments

Axle Alignment 21

Section 8 Component Replacement

Fasteners 25

Ride Air Spring 25

Lift Air Spring 26

Shock absorber 27

Axle Beam Assembly 28

TRI-FUNCTIONAL Bushing 29

Frame Hanger 37

Cross Member 39

Section 9 Troubleshooting Guide 41

Section 10 Torque Specifications 42

Section 11 Reference Material 44

HENDRICKSON
The World Rides On Us®

SECTION 1
Introduction

This publication is intended to acquaint and assist maintenance personnel in the preventive maintenance, service, repair, and rebuild of the OPTIMAAX® liftable forward tandem axle and suspension system for applicable Freightliner Vehicles.

NOTE Use only Hendrickson Genuine parts for servicing this suspension system.

It is important to read and understand the entire Technical Procedure publication prior to performing any maintenance, service, repair, or rebuild of the product. The information in this publication contains parts lists, safety information, product specifications, features, proper maintenance, service, repair and rebuild instructions for the OPTIMAAX liftable forward tandem axle and suspension system.

Refer to Hendrickson Literature No. 17730-310 for additional service instructions for OPTIMAAX lift axle system air controller module.

Hendrickson reserves the right to make changes and improvements to its products and publications at any time. Contact Hendrickson Tech Services for information on the latest version of this manual at 1-866-755-5968 (toll-free U.S. and Canada), 1-630-910-2800 (outside U.S. and Canada) or email: techservices@hendrickson-intl.com.

The latest revision of this publication is available online at www.hendrickson-intl.com.

SECTION 2
Product Description

Hendrickson's OPTIMAAX® liftable forward tandem axle and suspension system is a 6×2 solution to help fleets save fuel cost and weight with comparable handling to 6×4 tandem axle configurations. Operating as a liftable axle in the forward tandem position, this system provides versatility for fleets with variable loads.

OPTIMAAX is Ideal for diminishing load carriers such as: bulk haulers, grocery, livestock, beverage or applications experiencing empty back hauls. It includes integrated lift axle, suspension and automated controls. OPTIMAAX is available in 20,000 pound capacity and is compatible with drum brakes and disc brakes.

FIGURE 2-1

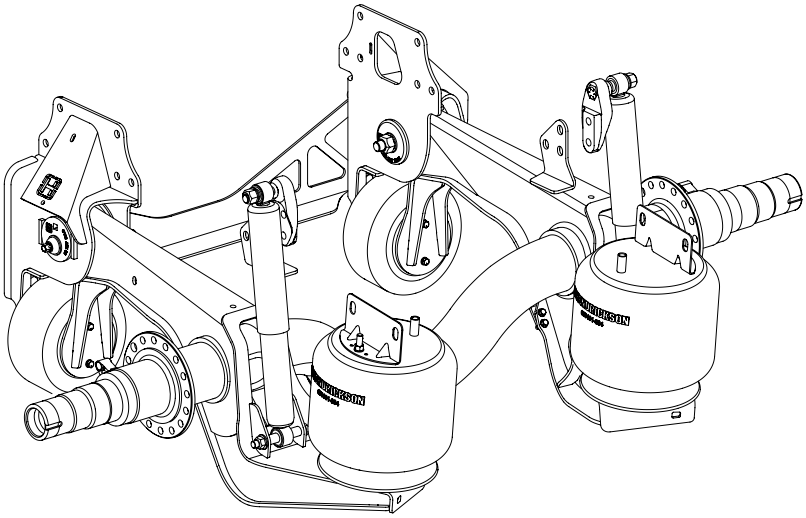

- **OPTIMIZE Automated Controls —** Proprietary program logic controls lift axle movement and load transfer. Fully automated controls eliminates driver intervention and training. Automates axle lowering and lifting by sensing load capacities.
- **OPTIMIZE Savings —** Achieves up to three percent additional fuel economy improvement through eliminating one (1) drive axle (6×2 configuration). Provides up to two percent additional fuel economy improvement through lifting the non-drive axle (4×2 configuration).
- **OPTIMIZE Traction and Handling —** Lifted axle position provides increased traction by increasing drive axle load. Improved traction when backing under trailers in soft soil or wet conditions versus traditional 6×2. Maintains vehicle handling characteristics by keeping the drive axle behind the fifth wheel.

OPTIMAAX® SPECIFICATIONS

Suspension Rating	20,000 lbs
Installed Weight	635 lbs
Ride Heights	7.8"
Axle Travel	7.6"

SECTION 3
Important Safety Notice

Proper maintenance, service and repair is important to the reliable operation of the suspension. The procedures recommended by Hendrickson and described in this technical publication are methods of performing such maintenance, service and repair.

The warnings and cautions should be read carefully to help prevent personal injury and to assure that proper methods are used. Improper maintenance, service or repair may damage the vehicle, cause personal injury, render the vehicle unsafe in operation, or void manufacturer's warranty.

Failure to follow the safety precautions in this manual can result in personal injury and / or property damage. Carefully read and understand all safety related information within this publication, on all decals and all such materials provided by the vehicle manufacturer before conducting any maintenance, service or repair.

EXPLANATION OF SIGNAL WORDS

Hazard "Signal Words" (Danger-Warning-Caution) appear in various locations throughout this publication. Information accented by one of these signal words must be observed to help minimize the risk of personal injury to service personnel, or possibility of improper service methods which may damage the vehicle or render it unsafe.

This is the safety alert symbol. It is used to alert you to potential personal injury hazards. Obey all safety messages that follow this symbol to avoid possible injury or death.

Additional 'Notes' or 'Service Hints' are utilized to emphasize areas of procedural importance and provide suggestions for ease of repair. The following definitions indicate the use of these signal words as they appear throughout the publication.

DANGER — INDICATES AN IMMINENTLY HAZARDOUS SITUATION WHICH, IF NOT AVOIDED, WILL RESULT IN SERIOUS INJURY OR DEATH.

WARNING — INDICATES A POTENTIAL HAZARDOUS SITUATION WHICH, IF NOT AVOIDED, CAN RESULT IN SERIOUS INJURY OR DEATH.

CAUTION — INDICATES A POTENTIAL HAZARDOUS SITUATION WHICH, IF NOT AVOIDED, MAY RESULT IN MINOR OR MODERATE INJURY, OR PROPERTY DAMAGE.

NOTE — An operating procedure, practice condition, etc. which is essential to emphasize.

SERVICE HINT — A helpful suggestion, which will make the servicing being performed a little easier and / or faster.

Also note that particular service operations may require the use of special tools designed for specific purposes. These special tools can be found in the Special Tools section of this publication.

The torque symbol alerts you to tighten fasteners to a specified torque value. Refer to Torque Specifications section of this publication.

SAFETY PRECAUTIONS

NOTE REPLACE ANY SAFETY DECALS THAT ARE FADED, TORN, MISSING, ILLEGIBLE, OR OTHERWISE DAMAGED. CONTACT HENDRICKSON TO ORDER REPLACEMENT LABELS.

WARNING

FASTENERS

DISCARD USED FASTENERS. ALWAYS USE NEW FASTENERS TO COMPLETE A REPAIR. FAILURE TO DO SO COULD RESULT IN FAILURE OF THE PART, OR MATING COMPONENTS, ADVERSE VEHICLE HANDLING, PERSONAL INJURY, OR PROPERTY DAMAGE.

LOOSE OR OVER TORQUED FASTENERS CAN CAUSE COMPONENT DAMAGE, ADVERSE VEHICLE HANDLING, PROPERTY DAMAGE, OR SEVERE PERSONAL INJURY. MAINTAIN CORRECT TORQUE VALUE AT ALL TIMES. CHECK TORQUE VALUES ON A REGULAR BASIS AS SPECIFIED, USING A TORQUE WRENCH THAT IS REGULARLY CALIBRATED. TORQUE VALUES SPECIFIED IN THIS TECHNICAL PUBLICATION ARE FOR HENDRICKSON SUPPLIED FASTENERS ONLY. IF NON HENDRICKSON FASTENERS ARE USED, FOLLOW TORQUE SPECIFICATION LISTED IN THE VEHICLE MANUFACTURER'S SERVICE MANUAL.

WARNING

AIR SPRING INFLATION AND DEFLATION

PRIOR TO DISASSEMBLY OF THE SUSPENSION, AIR SPRING ASSEMBLIES MUST BE DEFLATED. UNRESTRICTED AIR SPRING ASSEMBLIES CAN VIOLENTLY SHIFT. DO NOT INFLATE AIR SPRING ASSEMBLIES WHEN THEY ARE UNRESTRICTED. AIR SPRING ASSEMBLIES MUST BE RESTRICTED BY SUSPENSION OR OTHER ADEQUATE STRUCTURE. DO NOT INFLATE BEYOND PRESSURES RECOMMENDED BY AIR SPRING MANUFACTURER, CONTACT HENDRICKSON TECHNICAL SERVICES FOR DETAILS. IMPROPER USE OR OVER INFLATION MAY CAUSE AIR SPRING ASSEMBLIES TO BURST, CAUSING PROPERTY DAMAGE AND / OR SEVERE PERSONAL INJURY.

WARNING

PRIOR TO AND DURING DEFLATION AND INFLATION OF THE AIR SUSPENSION SYSTEM, ENSURE ALL PERSONNEL AND EQUIPMENT ARE CLEAR FROM UNDER THE VEHICLE AND AROUND THE SERVICE AREA, FAILURE TO DO SO CAN CAUSE SERIOUS PERSONAL INJURY, DEATH, OR PROPERTY DAMAGE.

CAUTION

AIR SPRING INFLATION

INFLATE THE SUSPENSION SLOWLY AND MAKE SURE THE RUBBER BLADDER OF THE AIR SPRING INFLATES UNIFORMLY AND IS NOT BINDING. FAILURE TO DO SO CAN CAUSE DAMAGE TO THE AIR SPRING AND / OR MOUNTING BRACKETS AND VOID WARRANTY.

CAUTION

AIR SPRING LOWER MOUNTING STUDS

IF THE AIR SPRING IS BEING REMOVED FOR AN ALTERNATE REPAIR, IT IS MANDATORY TO LUBRICATE THE LOWER AIR SPRING FASTENERS WITH PENETRATING OIL AND REMOVE WITH HAND TOOLS TO PREVENT DAMAGE TO THE LOWER AIR SPRING MOUNTING STUD. FAILURE TO DO SO CAN CAUSE COMPONENT DAMAGE AND VOID WARRANTY.

WARNING

MODIFYING COMPONENTS

DO NOT MODIFY OR REWORK PARTS WITHOUT AUTHORIZATION FROM HENDRICKSON. DO NOT SUBSTITUTE REPLACEMENT COMPONENTS NOT AUTHORIZED BY HENDRICKSON. USE OF MODIFIED, REWORKED, SUBSTITUTE OR REPLACEMENT PARTS NOT AUTHORIZED BY HENDRICKSON MAY NOT MEET HENDRICKSON'S SPECIFICATIONS, AND CAN RESULT IN FAILURE OF THE PART, ADVERSE VEHICLE HANDLING, POSSIBLE PERSONAL INJURY OR PROPERTY DAMAGE, AND WILL VOID ANY APPLICABLE WARRANTIES. USE ONLY HENDRICKSON AUTHORIZED REPLACEMENT PARTS.

WARNING

REPAIR OR RECONDITIONING

THE REPAIR OR RECONDITIONING OF SUSPENSION OR AXLE COMPONENTS IS NOT ALLOWED. ANY AXLE COMPONENTS FOUND TO BE DAMAGED OR OUT OF SPECIFICATIONS MUST BE REPLACED. ALL MAJOR HENDRICKSON COMPONENTS ARE HEAT TREATED AND TEMPERED. COMPONENTS CANNOT BE BENT, WELDED, HEATED, OR REPAIRED WITHOUT REDUCING THE STRENGTH OR LIFE OF THE COMPONENT. FAILURE TO FOLLOW THESE GUIDELINES CAN CAUSE ADVERSE VEHICLE HANDLING, POSSIBLE PERSONAL INJURY, DEATH, OR PROPERTY DAMAGE AND WILL VOID APPLICABLE WARRANTIES.

WARNING

PERSONNEL PROTECTIVE EQUIPMENT

ALWAYS WEAR PROPER EYE PROTECTION AND OTHER REQUIRED PERSONAL PROTECTIVE EQUIPMENT TO HELP PREVENT PERSONAL INJURY WHEN PERFORMING VEHICLE MAINTENANCE, REPAIR OR SERVICE.

WARNING

LOAD CAPACITY

ADHERE TO THE PUBLISHED CAPACITY RATINGS FOR THE SUSPENSIONS. ADD-ON AXLE ATTACHMENTS (I.E. SLIDING FIFTH WHEELS) AND OTHER LOAD TRANSFERRING DEVICES CAN INCREASE THE SUSPENSION LOAD ABOVE THE RATED AND APPROVED CAPACITIES WHICH COULD RESULT IN FAILURE AND ADVERSE VEHICLE HANDLING, POSSIBLY CAUSING PERSONAL INJURY OR PROPERTY DAMAGE.

CAUTION

PROCEDURES AND TOOLS

A MECHANIC USING A SERVICE PROCEDURE OR TOOL WHICH HAS NOT BEEN RECOMMENDED BY HENDRICKSON MUST FIRST SATISFY HIMSELF THAT NEITHER HIS SAFETY NOR THE VEHICLE'S SAFETY WILL BE JEOPARDIZED BY THE METHOD OR TOOL SELECTED. INDIVIDUALS DEVIATING IN ANY MANNER FROM THE INSTRUCTIONS PROVIDED ASSUME ALL RISKS OF POTENTIAL PERSONAL INJURY OR DAMAGE TO EQUIPMENT INVOLVED.

WARNING

TORCH / WELDING

DO NOT USE A CUTTING TORCH TO REMOVE ANY FASTENERS. THE USE OF HEAT ON SUSPENSION COMPONENTS WILL ADVERSELY AFFECT THE STRENGTH OF THESE PARTS. A COMPONENT DAMAGED IN THIS MANNER CAN RESULT IN THE ADVERSE VEHICLE HANDLING AND POSSIBLE PERSONAL INJURY OR PROPERTY DAMAGE.

EXERCISE EXTREME CARE WHEN HANDLING OR PERFORMING MAINTENANCE IN THE AREA OF THE SPRING ASSEMBLY AND AXLE. DO NOT CONNECT ARC WELDING GROUND LINE TO THE SPRING ASSEMBLY OR AXLE. DO NOT STRIKE AN ARC WITH THE ELECTRODE ON THE SPRING ASSEMBLY OR AXLE. DO NOT USE HEAT NEAR THE SPRING ASSEMBLY OR AXLE. DO NOT NICK OR GOUGE THE SPRING ASSEMBLY OR AXLE. SUCH IMPROPER ACTIONS CAN DAMAGE THE SPRING ASSEMBLY OR THE AXLE, AND CAN CAUSE ADVERSE VEHICLE HANDLING AND POSSIBLE PERSONAL INJURY OR PROPERTY DAMAGE.

WARNING

SUPPORT THE VEHICLE PRIOR TO SERVICING

PLACE THE VEHICLE ON A LEVEL FLOOR AND CHOCK THE WHEELS TO HELP PREVENT THE VEHICLE FROM MOVING. PRIOR TO SERVICING A VEHICLE IN THE RAISED POSITION, PROPERLY SUPPORT THE VEHICLE WITH SAFETY STANDS. DO NOT WORK AROUND OR UNDER A RAISED VEHICLE SUPPORTED ONLY WITH FLOOR JACKS OR OTHER LIFTING DEVICES, FAILURE TO DO SO CAN CAUSE DEATH, PERSONAL INJURY OR DAMAGE TO COMPONENTS.

WARNING

SUPPORT THE LIFT AXLE PRIOR TO SERVICING

PLACE THE VEHICLE ON A LEVEL FLOOR AND CHOCK THE WHEELS TO HELP PREVENT THE VEHICLE FROM MOVING. PRIOR TO SERVICING A LIFT AXLE IN THE RAISED POSITION, (1) PROPERLY SUPPORT THE LIFT AXLE WITH SAFETY STANDS, AND (2) RELEASE ALL AIR PRESSURE IN THE LIFT AXLE AIR SPRINGS AND RIDE SPRINGS. DO NOT WORK AROUND OR UNDER A RAISED LIFT AXLE SUPPORTED ONLY WITH FLOOR JACKS OR OTHER LIFTING DEVICES, FAILURE TO DO SO CAN CAUSE DEATH, PERSONAL INJURY OR DAMAGE TO COMPONENTS.

CAUTION

WELDING HARDWARE TO AXLES

WHEN WELDING TO OR ON THE AXLE, TAKE EVERY CAUTION TO PREVENT BEARING DAMAGE. WHEN GROUNDING WELDING EQUIPMENT TO THE AXLE, PREVENT CURRENT FROM PASSING THROUGH THE WHEEL BEARINGS.

A CONNECTION THAT PLACES A WHEEL BEARING BETWEEN THE GROUND CABLE CONNECTION AND THE WELD AREA CAN DAMAGE THE BEARING BY ELECTRIC ARCING.

WARNING

IMPROPER JACKING METHOD

IMPROPER JACKING METHOD CAN CAUSE STRUCTURAL DAMAGE AND RESULT IN ADVERSE VEHICLE HANDLING, SEVERE PERSONAL INJURY OR DEATH. DO NOT USE AXLE BEAM OUTBOARD OF AXLE SPRING SEATS. REFER TO VEHICLE MANUFACTURER FOR PROPER JACKING INSTRUCTIONS.

WARNING

LIFT AXLE RAPID AUTOMATIC MOVEMENT

LIFT AXLE RAPID, AUTOMATIC MOVEMENT CAN CAUSE SEVERE PERSONAL INJURY OR DEATH.

THE LIFT AXLE CONTROL SYSTEM IS PROGRAMMED TO AUTOMATICALLY:

LOWER THE LIFT AXLE IF –

- A LOAD ON THE PRIMARY REAR SUSPENSION IS ABOVE A PRESET VALUE, OR
- THE PARKING BRAKE IS ENGAGED, OR
- THE IGNITION SWITCH IS OFF, OR
- A MAJOR SYSTEM FAULT IS DETECTED

RAISE THE LIFT AXLE IF –

- 1) THE PARKING BRAKE IS DISENGAGED, AND 2) A LOAD ON THE PRIMARY REAR SUSPENSION IS BELOW A PRE-SET VALUE.

FIGURE 3-1 Product / Safety Decal 60905-048

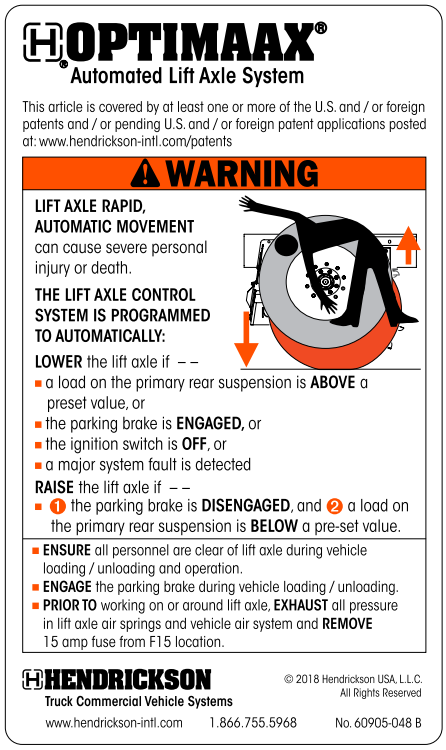

WARNING

LIFT AXLE LOADING / UNLOADING

- ENSURE ALL PERSONNEL ARE CLEAR OF LIFT AXLE DURING VEHICLE LOADING / UNLOADING AND OPERATION.
- ENGAGE THE PARKING BRAKE DURING VEHICLE LOADING / UNLOADING.

WARNING

PRIOR TO SERVICE

- EXHAUST ALL PRESSURE IN LIFT AXLE AIR SPRINGS AND VEHICLE AIR SYSTEM BEFORE WORKING ON OR AROUND LIFT AXLE.
- REMOVE 15 AMP FUSE FROM F15 LOCATION, REFER TO HENDRICKSON LITERATURE NO. 17730-310.

WARNING

AIR CONTROLLER MANIFOLD

HOT AIR CONTROLLER MANIFOLD SURFACE CAN CAUSE BURNS. DO NOT TOUCH. ALLOW MANIFOLD TO COOL BEFORE SERVICING, SEE FIGURES 3-2 AND 3-3.

FIGURE 3-2

FIGURE 3-3

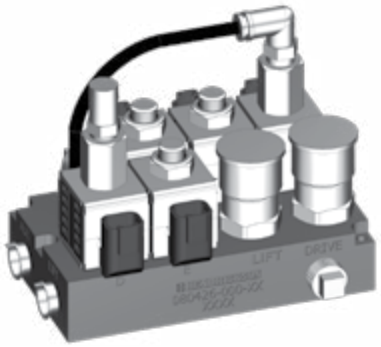

WARNING

ELECTRICAL SYSTEM

DO NOT WORK ON THE VEHICLE ELECTRICAL SYSTEM WITH THE VEHICLE POWER ON. DAMAGE TO VEHICLE ELECTRICAL SYSTEM AND / OR UNEXPECTED AXLE MOVEMENT MAY RESULT.

CAUTION

WIRING HARNESS

ENSURE THERE IS SUFFICIENT FREE MOVEMENT IN AIR CONTROLLER WIRING HARNESS TO PREVENT WIRES AND CONNECTIONS FROM BEING UNDER TENSION DURING INSTALLATION. FAILURE TO DO SO MAY DAMAGE OR FRAY THE CABLES.

WARNING

SYSTEM INSTALLATION

IT IS THE RESPONSIBILITY OF THE INSTALLER OF THE AIR CONTROLLER MODULE AND OTHER OPTIMAAX SYSTEM COMPONENTS TO ENSURE PROPER INSTALLATION. ANY INSTALLATION DEVIATIONS MUST BE APPROVED, IN WRITING, BY HENDRICKSON'S PRODUCT ENGINEERING DEPARTMENT. ANNUAL INSPECTION OF SYSTEM PRESSURE SENSORS IS REQUIRED TO CHECK FOR PROPER LOADING ON DRIVE AXLE AND STEER AXLE. FAILURE TO COMPLY WITH ANY OF THE ABOVE WILL VOID APPLICABLE WARRANTIES.

WARNING

PARTS CLEANING

SOLVENT CLEANERS CAN BE FLAMMABLE, POISONOUS AND CAUSE BURNS. TO HELP AVOID SERIOUS PERSONAL INJURY, CAREFULLY FOLLOW THE MANUFACTURER'S PRODUCT INSTRUCTIONS AND GUIDELINES AND THE FOLLOWING PROCEDURE:

1. WEAR PROPER EYE PROTECTION
2. WEAR CLOTHING THAT PROTECTS YOUR SKIN
3. WORK IN A WELL VENTILATED AREA
4. DO NOT USE GASOLINE, OR SOLVENTS THAT CONTAIN GASOLINE. GASOLINE CAN EXPLODE
5. HOT SOLUTION TANKS OR ALKALINE SOLUTIONS MUST BE USED CORRECTLY. FOLLOW THE MANUFACTURER'S RECOMMENDED INSTRUCTIONS AND GUIDELINES CAREFULLY TO HELP PREVENT PERSONAL ACCIDENT OR INJURY

DO NOT USE HOT SOLUTION TANKS OR WATER AND ALKALINE SOLUTIONS TO CLEAN GROUND OR POLISHED PARTS. DOING SO WILL CAUSE DAMAGE TO THE PARTS AND VOID ANY APPLICABLE WARRANTY.

SECTION 4
Special Tools

TRI-FUNCTIONAL® III BUSHING TOOL

Hendrickson Part No. 66086-122

Use with 3⅝" wide bushings

SHEAR HEAD BOLT-E20 1" SOCKET TOOL

Hendrickson Part No. A-24536

For Service

SECTION 5
Parts List

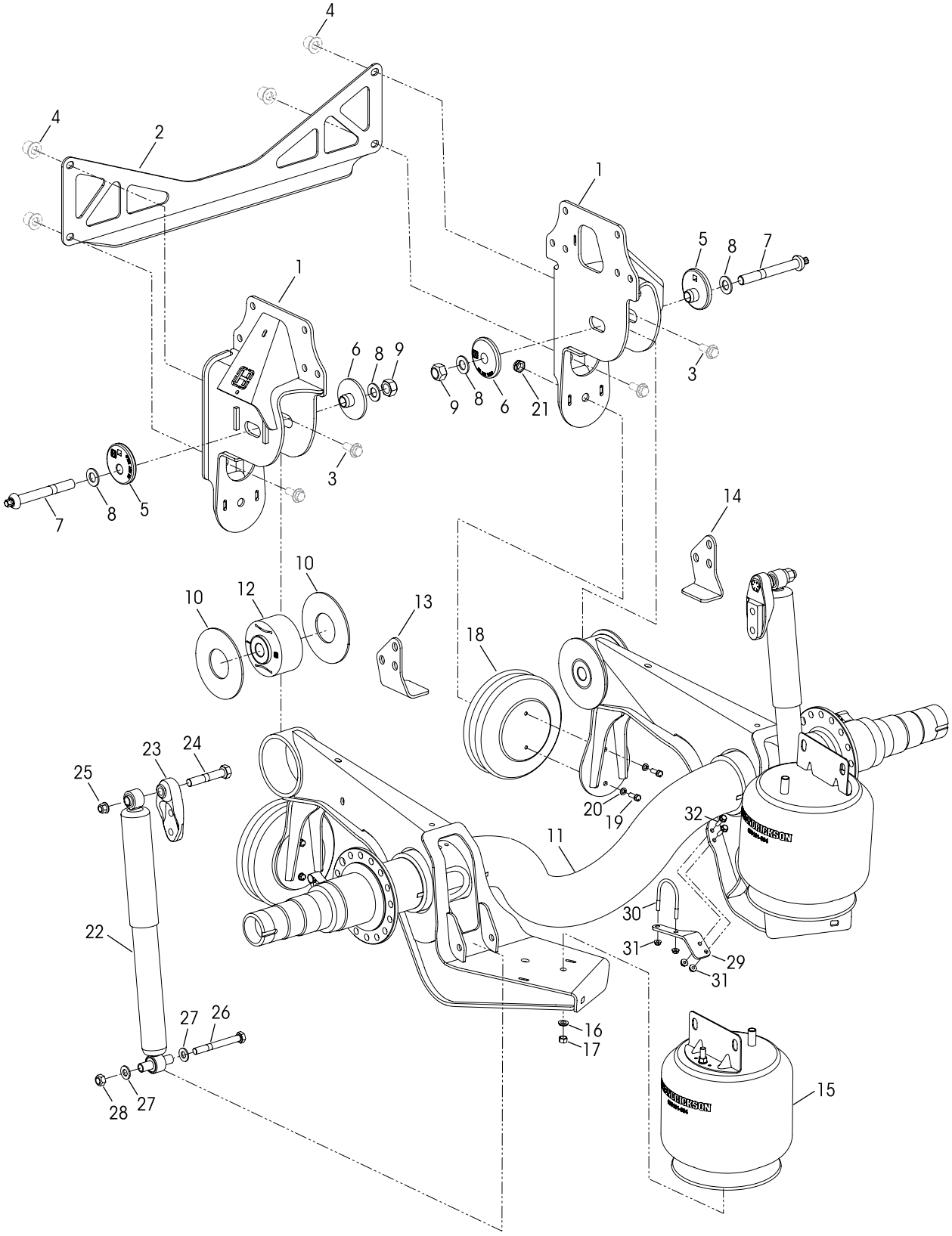

KEY NO.	PART NO.	DESCRIPTION	VEHICLE QTY.
1		Frame Hanger	
	79651-001	Left Hand	1
	79651-002	Right Hand	1
2	80100-001	Cross Member	1
3		**M16 Huck Bolt	4
4		**M16 Huck Locknut	4
		QUIK-ALIGN Service Kit, Includes Key Nos. 5-10	
	60632-042	**Axle Set**	
	34013-280	**One Side**	
	34013-281	**QUIK-ALIGN Collar Service Kit, One Side** Includes Key Nos. 5-9	
5		*QUIK-ALIGN Eccentric Collar	2
6		*QUIK-ALIGN Concentric Collar	2
	34013-282	**QUIK-ALIGN Fastener Service Kit, One Side** Includes Key Nos. 7-9	
7		*Shear Round Head Bolt	2
8		*⅞" Hardened Steel Washer	4
9		*⅞" Prevailing Torque Heavy Hex Nut	2
		TRI-FUNCTIONAL III Bushing Service Kit	
	34013-283	**Axle Set,** Includes Key Nos. 10, 12, 36	
	34013-284	**One Side,** Includes Key Nos. 10, 12, 36	
	34013-285	**One Side,** Includes Key Nos. 7-9, 12, 36	
	34013-286	**Thrust Washer Service Kit, One Side**	
10		*Thrust Washer	4
11	79357-004	Axle Beam Assembly, Includes Key No. 12 75.5 Wide Track, 33.4" Frame Width	1
12		*TRI-FUNCTIONAL III Bushing	2
	34013-237	**Axle Stop Service Kit, Axle Set** Includes Key Nos. 13-14	
		Axle Stop	
13	79887-001	Left Hand	1
14	79887-002	Right Hand	1
15	79191-004	Ride Air Spring	2
	49177-006	**Ride Air Spring Fasteners Service Kit, Axle Set** Includes Key Nos. 16-17	

KEY NO.	PART NO.	DESCRIPTION	VEHICLE QTY.
16	22962-014	½" Lower Ride Air Spring Washer	2
17	17700-010	½"-13 UNC Lower Ride Air Spring Locknut	2
	34013-287	**Lift Air Spring Service Kits, One Side,** Includes Key Nos. 18-21	
18		*Lift Air Spring	2
19	58035-001	⅜"-16 UNF x 1" Lift Air Spring Bolt	4
20	17497-005	⅜" Lift Air Spring Split Lock Washer	4
21	17700-031	¾" Locknut	2
	34013-289	**Single Shock Absorber Service Kit**, Includes Key Nos. 22-28	
22	80335-001	Shock Absorber	2
23	78250-003	Upper Shock Absorber Bracket	2
24	50764-019	¾"-10 UNC x 4½" Upper Shock Bolt	2
25	66137-000	¾"-10 UNC Upper Shock Flange Locknut	2
26	32043-019	⅝"-11 UNC x 5½" Lower Shock Bolt	2
27	22962-004	⅝" Lower Shock Washer	4
28	47764-000	⅝" Lower Shock Locknut	2
		****S-cam Service Kit, Axle Set**	
	60961-864	Includes Key Nos. 29-32	
	60961-869	Fasteners Only, Includes Key Nos. 30-32	
29		S-cam Bracket	
	80023-001	Left Hand	1
	80023-002	Right Hand	1
30	64202-000	5/16"-18 UNC x 3¼" U-bolt	2
31	75952-000	5/16"-18 UNC Flange Nut	8
32	75953-001	5/16"-18 UNC x 1" Flange Bolt	4
	80692-XXX	***OPTIMAAX Air Controller Module, Includes Key Nos. 33-34	
33	80427-XXX	***OPTIMAAX ECU (Contact OEM for Part No.)	1
34	80860-000	***Splash Shield Assembly	1
35	80426-000	***OPTIMAAX Air Controller Manifold	1
36		Rubber Assembly Oil	1 per Bushing

NOTE: * Item included in assembly / kit only, part not sold separately.

** Item required, component supplied by vehicle manufacturer. Hendrickson is not responsible for components not supplied by Hendrickson, for assistance with maintenance and rebuild instructions on these components see vehicle manufacturer.

*** Not shown, refer to Hendrickson Literature Number 17730-310 for more information.

**** Required for vehicles equipped with drum brakes only.

SECTION 6
Preventive Maintenance

A visual inspection of the OPTIMAAX liftable forward tandem axle and suspension system is necessary to help ensure all such components function to their highest efficiency, see Hendrickson Recommended Inspection Intervals chart below. Visual inspection must include the following items and other components referenced in this section:

HENDRICKSON RECOMMENDED INSPECTION INTERVALS	PRE-DELIVERY	DAILY	MONTHLY	QUARTERLY
Air Springs for chaffing or any signs of component damage			■	
Proper torque as recommended in the Torque Specification section of this publication	■		■	
Any signs of wear, damage or change in condition of suspension / axle components		■		
QUIK-ALIGN connection	■		■	
TRI-FUNCTIONAL Bushing and Thrust Washers				■
Shock absorbers, Upper Shock Absorber Bracket and Bolts				■
Welds (all)	■			■

COMPONENT INSPECTION

- **Axle** — Inspect the axle for cracks, damage or component contact.
- **Axle beam assembly** — Inspect the axle beam assembly for any signs of loosening or damage. See Axle Beam Assembly End Hub in this section. Replace all worn or damaged parts.
- **Cross member** — Inspect the cross member for any signs of loosening or damage. Replace all worn or damaged parts.
- **Fasteners** — Look for any loose or damaged fasteners on the entire suspension. Make sure all fasteners are tightened to the specified torque. Refer to Torque Specifications section in this publication if fasteners are supplied by Hendrickson. Refer to the vehicle manufacturer torque specifications for any non-Hendrickson fasteners. Use a QUIK-ALIGN socket tool and a calibrated torque wrench to check torque in a tightening direction. As soon as the fastener starts to move, record the torque. Correct the torque if necessary. Replace any worn or damaged fasteners.
- **Frame hanger** — Inspect the frame hanger for any signs of loosening or damage. Inspect all fasteners securing the frame hanger to the frame rails. Check all fasteners for proper torque. Replace all worn or damaged parts.
- **TRI-FUCTIONAL bushing** — Inspect the TRI-FUCTIONAL bushing for wear and damage. See TRI-FUCTIONAL Bushing inspection in this section. Replace as necessary.
- **Thrust washers** — Inspect thrust washers for wear and damage. Look for bent or cracked parts. See Thrust Washer inspection in this section. Replace as necessary.
- **Tire wear** — Inspect tires for wear patterns that may indicate suspension damage or misalignment. See Tire Inspection in this section.
- **Wear and damage** — Inspect all parts of suspension for wear and damage. Look for bent or cracked parts. Replace all worn or damaged parts.

See vehicle manufacturer's applicable publications for other preventive maintenance requirements.

FRAME HANGER

FIGURE 6-1

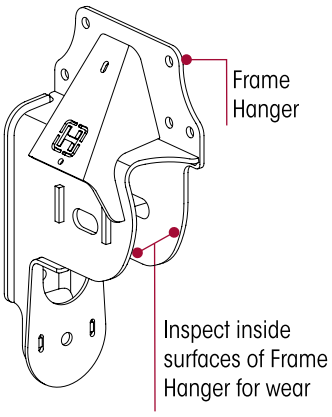

VISUAL INSPECTION

1. With the axle beam assembly lowered, inspect the inner surfaces of the frame hanger.
   - Some wear (polished metal) on the inner surface of the frame hanger is considered normal, due to the pivoting motion inherent with this connection.
   - Gouges or grooves worn into the frame hanger are abnormal. If any gouges, grooves or missing metal is found, the frame hanger must be replaced, refer to the Component Replacement section of this publication.

PHYSICAL INSPECTION

1. Chock the wheels and apply the parking brakes.
2. Remove tires.
3. Lower the axle beam assembly.
4. Inspect the inner surfaces of the frame hanger and the edges of the axle beam assembly for wear.
5. Also inspect the TRI-FUNCTIONAL bushing position within the axle beam assembly end hub, see TRI-FUNCTIONAL Bushing in this section.

AXLE BEAM ASSEMBLY END HUB

VISUAL INSPECTION

Some wear (polished metal) on the edge of the axle beam assembly end hub is considered normal, due to the pivoting motion inherent with this connection.

Missing metal, where the axle beam assembly end hub's radius edge has been worn away is considered excessive. Determine how much wear has occurred, see Figure 6-2.

FIGURE 6-2

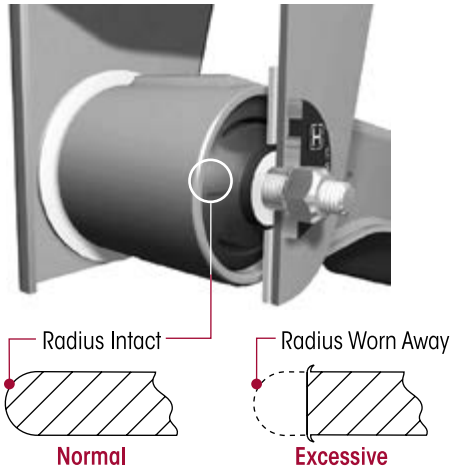

FIGURE 6-3

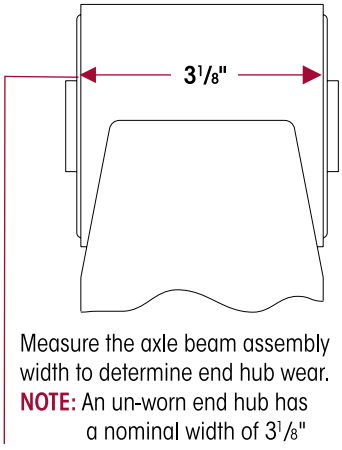

The axle beam assembly end hub width when new has a nominal width of 3⅛", see Figure 6-3. The amount of axle beam assembly end hub wear can be determined by measuring the width of the axle beam assembly end hub and subtracting this measured dimension from the new end hub width. If dimension is less than 3 3/32" replacement is necessary, see Table 6-1.

TABLE 6-1

AXLE BEAM ASSEMBLY END HUB MEASUREMENT	TRI-FUNCTIONAL BUSHING POSITION	REPAIR RECOMMENDATION
3 1/8" ± 1/32" (No wear on the beam end hub)	Centered	• Replace both thrust washers if worn, refer to TRI-FUNCTIONAL Bushing Component Replacement section of this publication. Inspect TRI-FUNCTIONAL bushing. Refer to the TRI-FUNCTIONAL Bushing inspection in this section, see Figure 6-8. When complete and re-align the axle, refer to the Alignment & Adjustments section of this publication.
	Off-center	• Refer to the TRI-FUNCTIONAL Bushing inspection in this section, see Figure 6-7. **DO NOT** attempt to center an off-center bushing, see Figure 6-8. Replacement of the off-centered bushing is required. • Install new TRI-FUNCTIONAL bushings, replace both thrust washers, refer to TRI-FUNCTIONAL Bushing Component Replacement section of this publication. When complete and re-align the axle, refer to the Alignment & Adjustments section of this publication.
Less than 3 3/32" (Worn into the weld)	Not applicable	• Any beam end hub wear into the weld is not acceptable. Replace the axle beam assembly and thrust washers, refer to the Component Replacement section of this publication.

TRI-FUNCTIONAL BUSHING

VISUAL INSPECTION

FIGURE 6-4

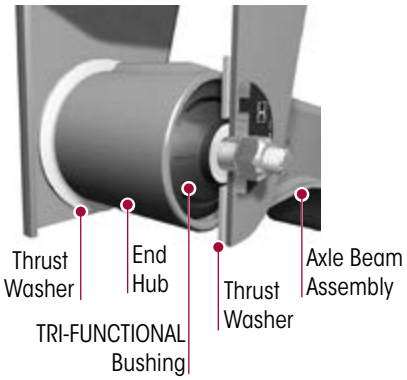

NOTE It is not necessary to disassemble suspension to inspect the TRI-FUNCTIONAL bushing.

On an unloaded vehicle, measure from the bottom edge of the axle beam assembly edge of the bottom plate to the bottom of the frame hanger flange as shown in Figure 6-5.

- If Dimension **A** is **less than** or **equal to 9/16"**, the TRI-FUNCTIONAL bushing is acceptable.
- If Dimension **A** is **greater than 9/16"**, a physical inspection is necessary. The TRI-FUNCTIONAL bushing connection must be disassembled and the axle beam assembly lowered to physically inspect the TRI-FUNCTIONAL bushing. Refer to the Component Replacement Section of this publication for TRI-FUNCTIONAL bushing disassembly instructions.

SERVICE HINT With the axle beam assembly lowered, Hendrickson recommends also inspecting the thrust washers, axle beam assembly end hub and the interior surfaces of the frame hanger.

FIGURE 6-5

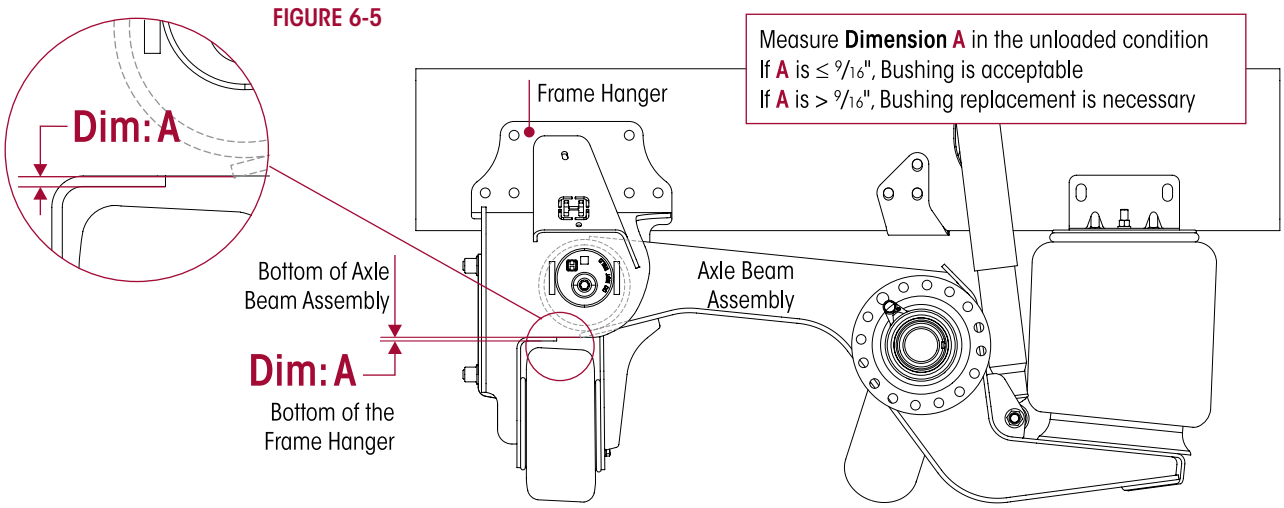

TRI-FUNCTIONAL III bushings will typically "settle" in the vertical direction upon suspension installation. It is normal for the voids to have this "settled" appearance, due to cargo and the weight of the vehicle loading the bushing.

- **Replacement Required:** Cracks in the rubber extending between the void and the bushing's inner metal or an excessive amount of vertical movement, are indications that the bushing needs to be replaced, see Figure 6-6. **DO NOT** use a pry bar to determine TRI-FUNCTIONAL bushing replacement.

FIGURE 6-6

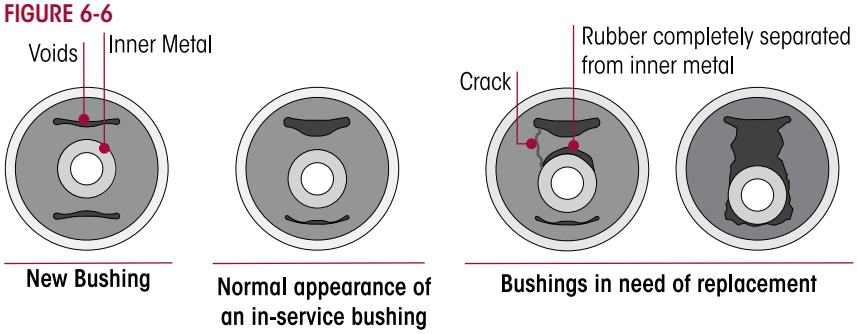

PHYSICAL INSPECTION

FIGURE 6-7

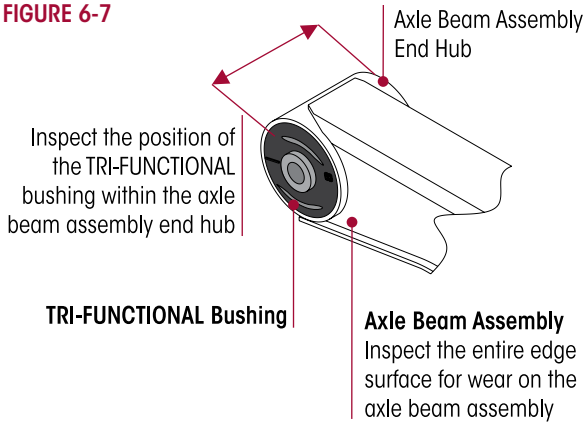

For evaluation purposes, the TRI-FUNCTIONAL bushing is considered either centered or off-center with respect to the axle beam assembly end hub and considered off-center when a portion of it extends outside of the axle beam assembly end hub on one side and not on the other, see Figure 6-8 for typical examples.

The TRI-FUNCTIONAL bushings will flex and elongate within the axle beam assembly end hub to control the forces generated by braking, accelerating, irregular road surfaces, etc. Because of this, it may be difficult at times to tell the difference between normal bushing operation and an off-center bushing.

FIGURE 6-8

TRI-FUNCTIONAL bushing position examples relative to the axle beam assembly end hub

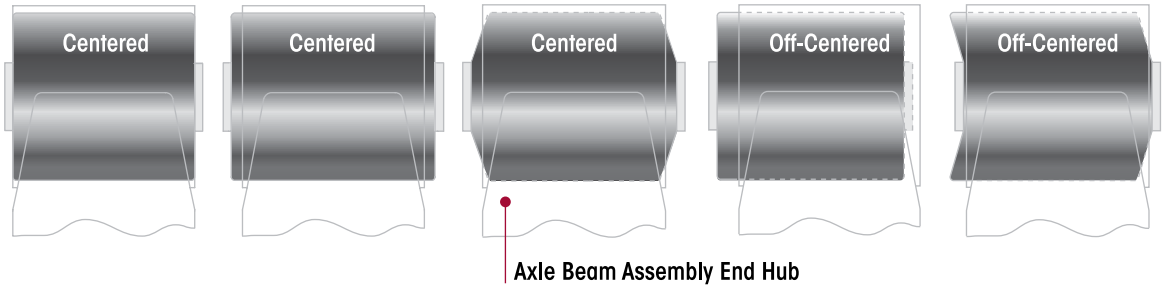

The key to identifying an off-center TRI-FUNCTIONAL III bushing is the thrust washers. If the thrust washers are in serviceable condition (not missing, cut, worn-through or otherwise deteriorated), the bushing cannot be off-center. However, if an axle beam assembly end hub thrust washer spacer is worn-through, the potential exists for an off-center condition (as described above).

If the TRI-FUNCTIONAL bushing is off-center, but the axle beam assembly end hub width is acceptable, replace the bushing. Refer to TRI-FUNCTIONAL Bushing in the Component Replacement section of this publication.

THRUST WASHERS

Thrust washers are located inside the frame hangers on each side of the TRI-FUNCTIONAL bushing, see Figure 6-9.

FIGURE 6-9

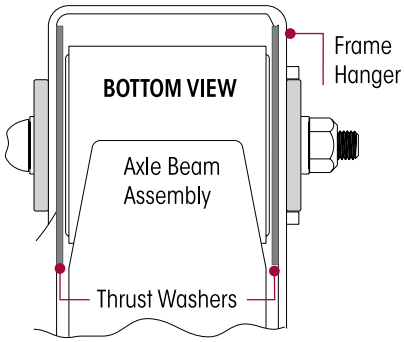

NOTE Hendrickson recommends if one (1) thrust washer requires replacement that both thrust washers on each side of the TRI-FUNCTIONAL bushing be replaced. Refer the Component Replacement Section in this publication.

VISUAL INSPECTION

NOTE The lift air spring may need to be removed to aid in visual inspection.

CAUTION A THRUST WASHER THAT IS COMPLETELY MISSING, HAS BEEN CUT OR WORN THROUGH IS CONSIDERED ABNORMAL. IF THESE CONDITIONS EXIST, REPLACEMENT IS REQUIRED TO PROLONG THE LIFE OF THE SUSPENSION.

1. Visually inspect thrust washers. Due to the pivoting motion inherent with this connection, some thrust washer wear is expected, see Figure 6-10.
   - **Acceptable:** Cupping is an acceptable condition where the thrust washer forms around the axle beam assembly end hub and resembles a shallow dish, see Figure 6-11.
   - **Unacceptable:** A missing, cut, worn-through or deteriorated thrust washer requires replacement, see Figure 6-12. Refer to the Component Replacement section of this publication.

FIGURE 6-10

Normal Thrust Washer

FIGURE 6-11

ACCEPTABLE CONDITION

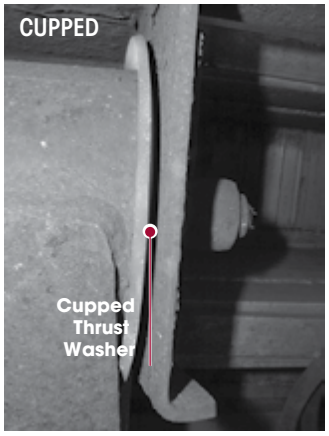

Cupped Thrust Washer
Friction generated heat can cause the thrust washer to cup around the axle beam assembly end hub. This is acceptable as long as the thrust washer remains intact and is not cut or worn-through.

FIGURE 6-12

UNACCEPTABLE

Worn Thrust Washer
The thrust washer shows extreme wear. The thrust washer circumference is completely trimmed by the axle beam assembly end hub. Replacement required.

REPAIR RECOMMENDATIONS

WARNING

DO NOT USE MORE THAN THE RECOMMENDED NUMBER OF THRUST WASHERS, THIS CAN CAUSE THE TRI-FUNCTIONAL BUSHING TO NOT HAVE ENOUGH ROOM WITHIN THE FRAME HANGER TO FUNCTION PROPERLY AND CAN RESULT IN SEVERE DAMAGE TO THE SUSPENSION.

1. After each TRI-FUNCTIONAL bushing component has been evaluated, use the Table 6-1 to determine the correct repair action. **DO NOT** add more thrust washers than what is recommended. A slight degree of freedom is required by the TRI-FUNCTIONAL bushing within the frame hanger to flex, elongate and otherwise absorb forces generated by braking, accelerating and irregular road surfaces.

TIRE INSPECTION

The leading causes of tire wear are the following, in order of importance:

1. Tire Pressure
2. Toe Setting
3. Thrust Angle
4. Camber

The following tire Inspection guidelines are based upon Technology & Maintenance Council (TMC) recommended practices. Any issues regarding irregular tire wear where Hendrickson is asked for assistance will require tire and alignment maintenance records, reference TMC's literature numbers RP 219A, RP 230, or RP 642.

Tire wear is normally the best indicator of vehicle alignment condition. If tires are wearing too rapidly or irregularly, alignment corrections may be needed. The tire wear patterns described below can help isolate specific alignment problems.

The most common conditions of concern are:

- Overall Fast Wear (Miles per 32nd)
- Feather Wear
- Cupping
- Diagonal Wear
- Rapid Shoulder Wear (One Shoulder Only)
- One-Sided Wear

FIGURE 6-13
OVERALL FAST WEAR (Miles per 32nd)

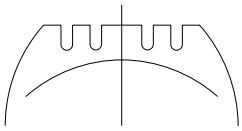

Overall Fast Wear — Fast wear can be described as exhibiting a good, but accelerated wear pattern. It is typically caused by operating conditions, such as mountainous terrain, frequency and severity of turning, abrasive road surfaces in combination with vehicle configurations and their attributes-such as power steering, heavy axle loads, high wheel cuts, setback axles, short wheel base tractors, long wheel base straight trucks. To correct this problem, consult with vehicle and tire manufacturers when specifying equipment or replacing tires. For more information, see TMC RP 219A publication, page 11. For information on how to accurately measure and record tire rates, see TMC RP 230 publication.

FIGURE 6-14
FEATHER WEAR

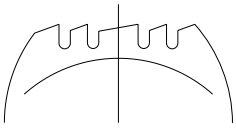

Feather wear — Tread ribs or blocks worn so that one side is higher than the other resulting in step-offs across the tread face. Generally, ribs or blocks exhibit this wear. To spot this problem, do the following:

With one hand flat on the tread of the tire and a firm down pressure, slide your hand across the tread of the tire. In one direction, the tire will feel smooth and in the opposite direction there will be a sharp edge to the tread. Typical causes of feather wear include: excessive side force scrubbing, resulting from conditions of misalignment such as excessive toe, drive axle misalignment, worn, missing or damaged suspension components, bent tie rods or other chassis misalignment.

To correct this problem, tires can be rotated to another axle for maximum utilization of remaining tread. Additionally, diagnose the vehicle itself and correct misalignment condition as required. If steer tire feathers are in opposite directions, an improper toe condition is most likely the cause. For more information, see TMC RP 219A publication, page 5.

If feather wear on both steer tires is in the same direction, drive axle or other chassis misalignment is indicated. If one steer tire shows feather wear and the other steer tire has normal wear, a combination of toe and drive axle or chassis misalignment is indicated.

FIGURE 6-15

CUPPING

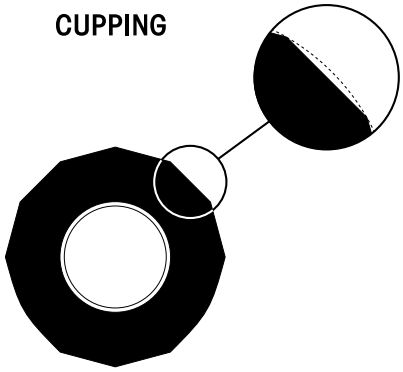

Cupping — Localized, dished out areas of fast wear creating a scalloped appearance around the tire. Cupping, which appears around the tire on the shoulder ribs, may also progress to adjoining ribs, see TMC RP 219A publication, page 7.

Cupping is usually a result of moderate-to-severe imbalance, improper rim / wheel mounting, excessive wheel end play or other assembly non-uniformity. It can also be due to lack of shock absorber control on some suspension types.

To solve cupping problems:

- *Tires* – Correct mismount or balance problem. If ride complaints arise, steer tires may be rotated to drive or trailer axle.
- *Vehicle* – Diagnose component imbalance condition, i.e., wheel, rim, hub, brake, drum. Correct as necessary.

FIGURE 6-16

DIAGONAL WEAR

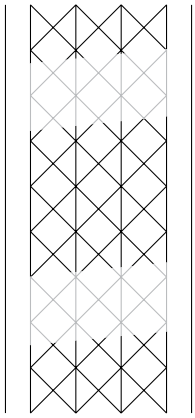

Diagonal Wear — Can be described as localized flat spots worn diagonally across the tread at approximately 25-35° angles, often repeating around the tread circumference. For more information, see TMC RP 219A publication, page 20.

Diagonal wear is usually caused by bad wheel bearings, toe out, mismounting of tire and wheel assembly to axle, and mismatched duals for size and / or inflation pressures. It may start as brake skid. Diagonal wear is aggravated by high speed empty or light load hauls.

To correct diagonal wear, reverse direction of rotation of the tire. If wear is excessive, true tire. If the source of trouble is the vehicle, diagnose cause and correct as needed.

FIGURE 6-17

RAPID SHOULDER WEAR (One Shoulder Only)

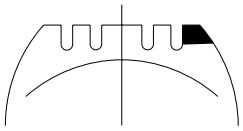

Rapid Shoulder Wear (One Shoulder Only) — Is defined as a tire worn on the edge of one shoulder, sometimes extending to inner ribs. It can progress to diagonal wipeout. For more information, see TMC RP 219A publication, page 22.

This wear condition is usually caused by excessive toe or excessive camber. These conditions can be created by a misaligned or bent axle and can also be caused by loose or worn wheel bearings.

To correct this type of rapid shoulder wear:

- *Tires* – Change direction of rotation of tire. If shoulder wear is severe, remove and retread.
- *Vehicle* – Diagnose misalignment and / or mechanical condition and correct.

FIGURE 6-18

ONE-SIDED WEAR

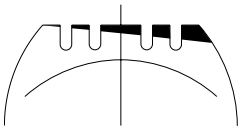

One-sided wear — Is excessive wear on one side of tire extending from the shoulder towards the center of the tread. For more information, see TMC RP 219A, page 26.

One-sided wear is usually caused by improper alignment, worn kingpins, loose wheel bearings, excessive camber, excessive axle loads, non-parallel axles, or non-uniform tire and wheel assembly caused by improper bead seating or bent wheel.

To correct one-sided wear:

- *Tires* – Depending on severity, rotate tires to another axle position or, if worn to minimum tread depths, submit for possible retreading.
- *Vehicle* – Diagnose mechanical problem and correct.

SHOCK ABSORBER

NOTE It is not necessary to replace shock absorbers in pairs if only one (1) shock absorber requires replacement.

Hendrickson uses a long service life, premium shock absorber on all OPTIMAAX suspensions. When the shock absorber replacement is necessary, Hendrickson recommends that the shock absorbers be replaced with identical Hendrickson Genuine parts for servicing. Failure to do so will affect the suspension performance, durability, and will void any applicable warranty. See vehicle manufacturer's applicable publications for other shock absorber inspection requirements.

Inspection of the shock absorber can be performed by doing a heat test, and a visual inspection. Replace as necessary, refer to the Component Replacement Section of this publication.

FIGURE 6-19

HEAT TEST

1. Drive the vehicle at moderate speeds on rough road for minimum of fifteen minutes.

WARNING DO NOT GRAB THE SHOCK ABSORBER AS IT COULD POSSIBLY BE HOT AND CAUSE PERSONAL INJURY.

2. Use an infrared thermometer to check the temperature of the shock absorber. This can also be performed by carefully touching the shock absorber body below the dust cover. Touch the frame to get an ambient reference, see Figure 6-19. A warm shock absorber is acceptable, a cold shock absorber should be replaced.
3. To inspect for an internal failure, remove and shake the suspected shock absorber. Listen for the sound of metal parts rattling inside. Rattling of metal parts can indicate that the shock absorber has an internal failure and the shock absorber should be replaced.

VISUAL INSPECTION

Look for these potential problems when doing a visual inspection. Inspect the shock absorbers fully extended. Replace as necessary.

FIGURE 6-20

SHOCK ABSORBER VISUAL INSPECTION - UNACCEPTABLE CONDITIONS

LEAKING VS. MISTING SHOCK ABSORBER VISUAL INSPECTION

The inspection must not be conducted after driving in wet weather or a vehicle wash. The shock absorber needs to be free from water. Many shock absorbers are often misdiagnosed as failures. Misting is the process whereby very small amounts of shock absorber fluid evaporate at a high operating temperature through the upper seal of the shock absorber. When the "mist" reaches

the cooler outside air, it condenses and forms a film on the outside of the shock absorber body. Misting is perfectly normal and necessary function of the shock absorber. The fluid which evaporates through the seal area helps to lubricate and prolong the life of the seal.

FIGURE 6-21

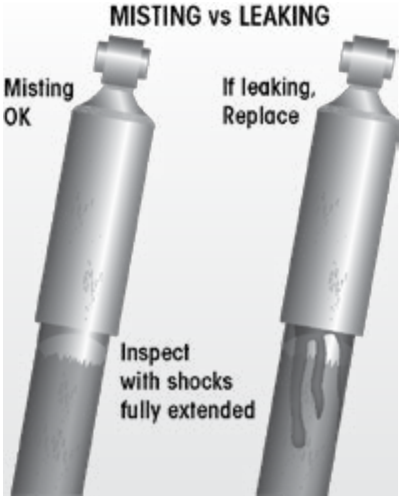

NOTE

OPTIMAAX systems are equipped with a premium seal on the shock absorber, however this seal will allow for misting to appear on the shock absorber body (misting is not a leak and is considered acceptable).

Inspect the shock absorber fully extended. **A shock absorber that is truly leaking** will show signs of fluid **leaking in streams from the upper seal**. These streams can easily be seen, underneath the main body (dust cover) of the shock absorber. Replace as necessary.

SECTION 7
Alignment & Adjustments

AXLE ALIGNMENT

Proper alignment is essential for maximum ride quality, performance, and tire service life. The recommended alignment procedure is described below. This procedure should be performed if excessive or irregular tire wear is observed, or any time the QUIK-ALIGN connection is loosened or removed.

FIGURE 7-1

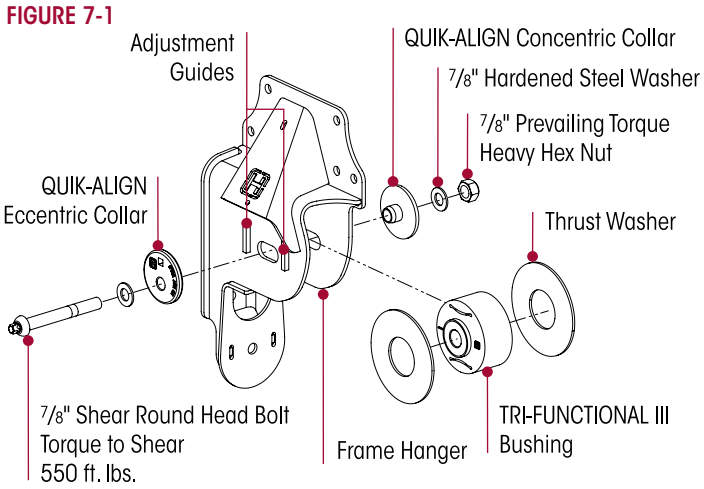

The QUIK-ALIGN alignment feature incorporates two (2) collars that are inserted into slots located on each side of the frame hanger. The outboard collar is eccentric and inboard is concentric. The position of the eccentric collar is controlled by an adjustment guide, see Figure 7-1.

Rotating the eccentric collar clockwise or counter clockwise provides fore and aft movement of the suspension's axle. The eccentric collar square hole helps to indicate the alignment position. The maximum adjustment range is 45° from the twelve o'clock position, see Figure 7-2.

The QUIK-ALIGN connection is clamped together with a shear round-head bolt, washers and a prevailing torque heavy hex nut. The shear bolt helps make the QUIK-ALIGN connection tamper resistant.

FIGURE 7-2

NOTE
Rotating the eccentric collar clockwise or counter clockwise provides fore and aft movement of the suspension's axle. The eccentric collar square hole helps to indicate the alignment position. The maximum adjustment range is 45° from the twelve o'clock position.

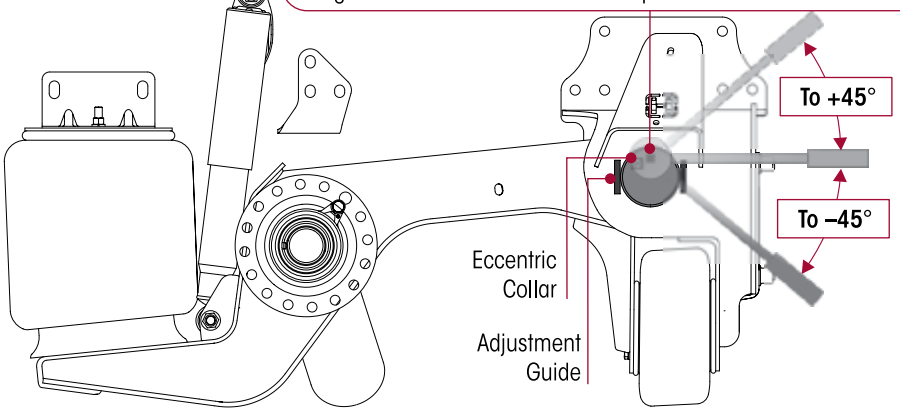

INSPECTION

1. Use a work bay with a level surface and free of debris.

WARNING

PRIOR TO REMOVING OR INSTALLING THE 15 AMP FUSE FROM THE F15 LOCATION, ENSURE ALL PERSONNEL AND EQUIPMENT ARE CLEAR FROM UNDER THE VEHICLE AND AROUND THE SERVICE AREA, FAILURE TO DO SO CAN CAUSE SERIOUS PERSONAL INJURY, DEATH, OR PROPERTY DAMAGE.

2. Ensure all personnel and equipment are clear from under the vehicle and around the service area.
3. Prior to starting the vehicle, remove the 15 AMP Fuse from F15 location, this will allow the OPTIMAAX axle to lower and prevent the axle from retracting.
4. Start the vehicle. Relax the suspension by slowly moving the vehicle back and forth several times in straight line without using the brakes. This will slacken or loosen the suspension as the vehicle is positioned. End with all wheels positioned straight ahead.
5. **DO NOT** set the vehicle's parking brake.
6. Chock the front wheels of the vehicle.
7. Inspect each set of tires. If equipped with dual wheel set tires, each set must match to a maximum of ⅛" tire radius or a maximum of ¾" variation in tire circumference.

NOTE Since the liftable forward tandem axle will be aligned relative to the drive axle, it is essential that the drive axle is aligned within the vehicle manufacturer's specifications prior to the liftable forward tandem axle alignment.

8. Verify and maintain the air system at full operating pressure.

FIGURE 7-3

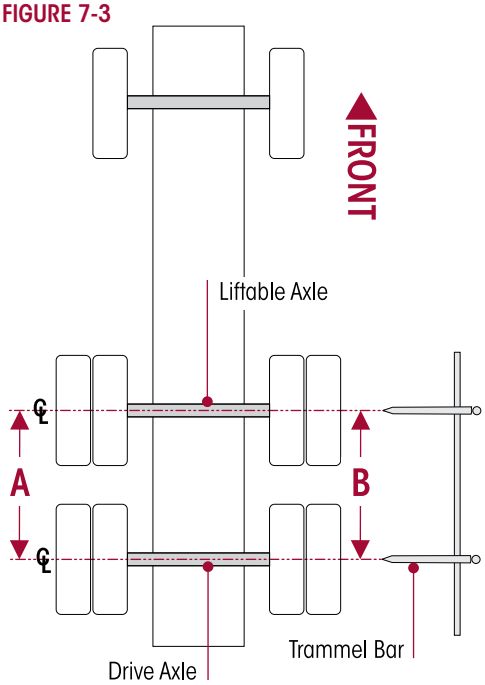

9. Verify the vehicle is at the correct ride height. Correct as necessary, refer to the to the vehicle manufacturer for proper instructions.
10. Verify all suspension all components are in good condition. Repair or replace any worn or damaged suspension components prior to proceeding with the alignment process.
11. If alignment equipment is not available, Use a trammel bar to measure the distance between the drive axle spindle center to the liftable forward tandem axle spindle center on the left side of the vehicle **(A)**, see Figure 7-3.
12. Use a trammel bar, measure the distance between the drive axle spindle center to the liftable forward tandem axle spindle center on the right side of the vehicle **(B)**.
13. Calculate the distance between the two measurements **(A-B)**.
    - If the difference is 1⁄16" or less, the liftable forward tandem axle alignment is acceptable.
      a. Engage the parking brake.
      b. Ensure all personnel and equipment are clear from under the vehicle and around the service area.
      c. Install the 15 AMP Fuse into the F15 location.
      d. Remove wheel chocks.
    - If the difference is greater than 1⁄16", it is necessary to align the liftable forward tandem axle. Proceed to OPTIMAAX Adjustment.

OPTIMAAX ADJUSTMENT

You will need:

- 1" drive E-20 QUIK-ALIGN Socket (see Special Tools section)
- 1 7/16" Wrench
- ½" Square Drive Breaker Bar
- Impact wrench capable of 600 foot pounds

NOTE The liftable forward tandem axle alignment should be adjusted so the center-line is parallel to the centerline of the drive axle, see Figure 7-3.

1. Determine which side of the liftable forward tandem axle requires alignment adjustment.
2. Remove and discard QUIK-ALIGN fasteners. Leave the inboard concentric collar and outboard eccentric collar in place, see Figure 7-1.

WARNING HENDRICKSON DOES NOT AUTHORIZE REUSE OF THE SHEAR ROUND BOLT. WHENEVER THE QUIK-ALIGN CONNECTION IS DISASSEMBLED, THE EXISTING SHEAR-TYPE BOLT MUST BE REMOVED BY GRINDING OR ANY OTHER APPROPRIATE METHOD AND DISCARDING THE EXISTING HEX NUT. A NEW SHEAR ROUND BOLT AND HEX NUT MUST BE INSTALLED AND SHEARED TO ACHIEVE THE PROPER TORQUE AND CLAMP FORCE. ANYONE WHO ASSEMBLES THE QUIK-ALIGN CONNECTION (OEM'S, DEALERS, REPAIR FACILITIES, ETC.) IS RESPONSIBLE FOR THE PROPER INSTALLATION OF THE SHEAR-TYPE BOLT. FAILURE TO REACH THE REQUIRED TORQUE CAN RESULT IN AN INSUFFICIENT CLAMP FORCE, UNRELIABLE AXLE ALIGNMENT, INJURY OR PROPERTY DAMAGE.

CAUTION DO NOT APPLY OR ALLOW ANY TYPE OF LUBRICANT TO CONTACT THE THREADS OF THE SHEAR-TYPE BOLTS. LUBRICANT WILL REDUCE THE FRICTION BETWEEN THE THREADS OF THE BOLTS AND THE TORQUE PREVAILING HEAVY HEX NUT. FAILURE OF THE SHEAR-TYPE BOLTS MAY OCCUR.

FIGURE 7-4

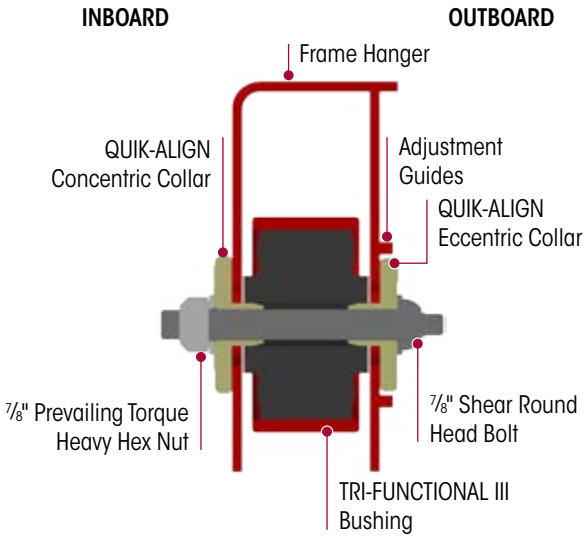

FIGURE 7-5

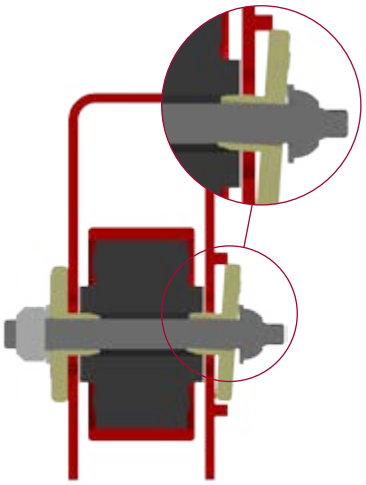

FIGURE 7-6

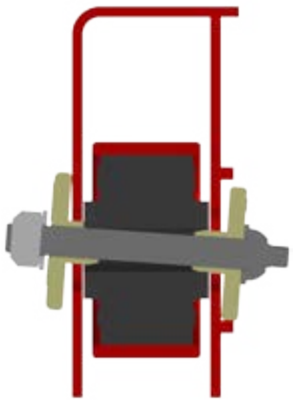

3. Install new QUIK-ALIGN fasteners with the shear round head bolt outboard and the hex nut inboard, see Figure 7-4.
4. Tighten the fasteners tight enough to hold the eccentric flanged collar flush against the hanger face and within the adjustment guide, but loose enough to permit to the eccentric collar to rotate freely, see Figure 7-5.
5. Ensure both the eccentric and concentric collars are flush against the hanger.
6. Use a ½" square drive breaker bar to rotate the eccentric collar and ensure both the eccentric and concentric collars, are aligned and moving simultaneously, see Figure 7.6.

FIGURE 7-7

NOTE
Rotating the eccentric collar clockwise or counter clockwise provides fore and aft movement of the suspension's axle. The eccentric collar square hole indicates the alignment position. **DO NOT** exceed the maximum adjustment range of 45° from the twelve o'clock position.

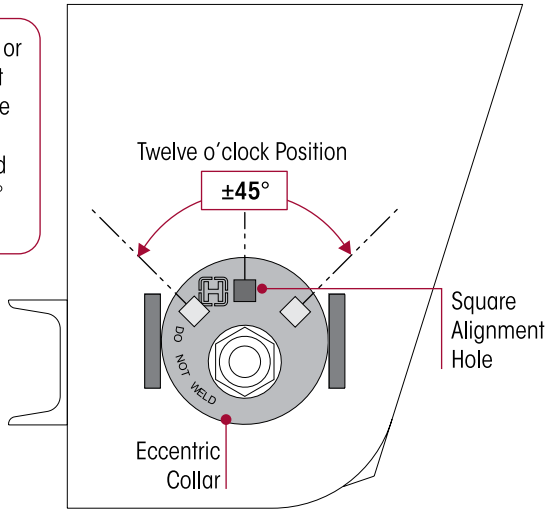

7. Adjust the axle until the axle is aligned, see Figures 7-7 and 7-8.

NOTE Ensure axle alignment occurred without compressing the TRI-FUNCTIONAL bushing.

8. Repeat Steps 2 through 7 on the opposite QUIK-ALIGN connection if necessary, to accurately complete the alignment of the liftable forward tandem axle.
9. Snug the QUIK-ALIGN fasteners and recheck alignment, see Figure 7-9.

FIGURE 7-8

FIGURE 7-9

CAUTION

EXCEEDING TORQUE SPECIFICATIONS MAY RESULT IN FASTENER FAILURE OF THE QUIK-ALIGN CONNECTION.

10. Use a QUIK-ALIGN socket tool (see Special Tools Section of this publication) to tighten the shear round bolt until the head shears off. Ensure the drive socket fully engages the shear head to avoid damaging the splines. Hendrickson recommends tightening the shear round head bolts to shear (550 foot pounds torque).
11. Engage the parking brake.

WARNING

PRIOR TO REMOVING OR INSTALLING THE 15 AMP FUSE FROM THE F15 LOCATION, ENSURE ALL PERSONNEL AND EQUIPMENT ARE CLEAR FROM UNDER THE VEHICLE AND AROUND THE SERVICE AREA, FAILURE TO DO SO CAN CAUSE SERIOUS PERSONAL INJURY, DEATH, OR PROPERTY DAMAGE.

12. Ensure all personnel and equipment are clear from under the vehicle and around the service area. Install the 15 AMP Fuse into the F15 location to raise the OPTIMAAX axle.
13. Remove the wheel chocks.

SECTION 8
Component Replacement

FASTENERS

Hendrickson recommends that when servicing the vehicle to replace the removed fasteners with new equivalent fasteners. Maintain correct torque values at all times. Check torque values as specified, see Hendrickson's Torque Specifications section in this publication. If non-Hendrickson fasteners are used follow torque specifications listed in the vehicle manufacturer's service manual.

RIDE AIR SPRING

DISASSEMBLY

1. Chock the front wheels.
2. Support the frame of the vehicle at ride height with safety stands.
3. Disconnect the height control linkage assembly from the height control valve arm on the drive axle, see vehicle manufacturer's instructions.

WARNING

PRIOR TO AND DURING DEFLATION AND INFLATION OF THE AIR SUSPENSION SYSTEM, ENSURE ALL PERSONNEL AND EQUIPMENT ARE CLEAR FROM UNDER THE VEHICLE AND AROUND THE SERVICE AREA, FAILURE TO DO SO CAN CAUSE SERIOUS PERSONAL INJURY, DEATH, OR PROPERTY DAMAGE.

WARNING

LIFT AXLE RAPID AUTOMATIC MOVEMENT

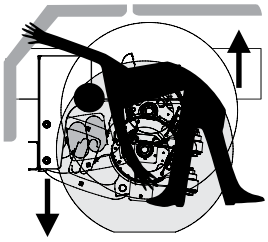

LIFT AXLE RAPID, AUTOMATIC MOVEMENT CAN CAUSE SEVERE PERSONAL INJURY OR DEATH.

THE LIFT AXLE CONTROL SYSTEM IS PROGRAMMED TO AUTOMATICALLY:

LOWER THE LIFT AXLE IF –

- A LOAD ON THE PRIMARY REAR SUSPENSION IS ABOVE A PRESET VALUE, OR
- THE PARKING BRAKE IS ENGAGED, OR
- THE IGNITION SWITCH IS OFF, OR
- A MAJOR SYSTEM FAULT IS DETECTED

RAISE THE LIFT AXLE IF –

- 1) THE PARKING BRAKE IS DISENGAGED, AND 2) A LOAD ON THE PRIMARY REAR SUSPENSION IS BELOW A PRE-SET VALUE.

WARNING

LIFT AXLE LOADING / UNLOADING

- ENSURE ALL PERSONNEL ARE CLEAR OF LIFT AXLE DURING VEHICLE LOADING / UNLOADING AND OPERATION.
- ENGAGE THE PARKING BRAKE DURING VEHICLE LOADING / UNLOADING.

WARNING

PRIOR TO SERVICE

- EXHAUST ALL PRESSURE IN LIFT AXLE AIR SPRINGS AND VEHICLE AIR SYSTEM BEFORE WORKING ON OR AROUND LIFT AXLE.
- REMOVE 15 AMP FUSE FROM F15 LOCATION, REFER TO HENDRICKSON LITERATURE NO. 17730-310.

4. See additional Air Spring Cautions and Warnings in the Important Safety Notice section of this publication prior to deflating or inflating the air system.
5. Lower the height control valve arm to exhaust the air in the air springs and deflate the rear suspension per vehicle manufacturer's instructions.
6. Remove the air line from the air spring.

CAUTION

IF THE AIR SPRING IS BEING REMOVED FOR AN ALTERNATE REPAIR, IT IS MANDATORY TO LUBRICATE THE LOWER AIR SPRING FASTENERS WITH PENETRATING OIL AND REMOVE WITH HAND TOOLS TO PREVENT DAMAGE TO THE LOWER AIR SPRING MOUNTING STUD. FAILURE TO DO SO CAN CAUSE COMPONENT DAMAGE AND VOID WARRANTY.

FIGURE 8-1

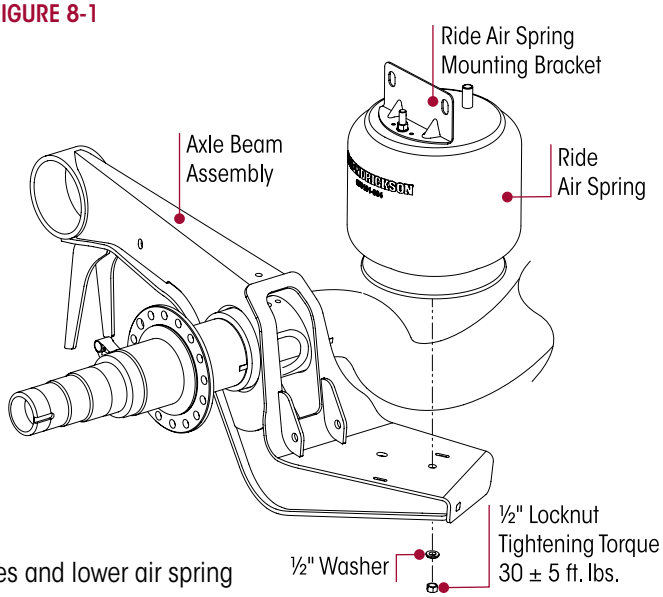

7. Using **HAND TOOLS** only, remove the lower air spring mounting locknut, see Figure 8-1. This will help prevent the air spring mounting stud from breaking during removal.
8. Remove the upper air spring fasteners from the air spring mounting bracket and the frame, see Figure 8-1.
9. Remove the air spring.

INSPECTION

1. Inspect the mounting surfaces and lower air spring mount for any damage. Replace as necessary.

ASSEMBLY

1. Install the air spring between the frame and the trailing arm assembly.

WARNING

FAILURE TO PRESS THE AIR SPRING AGAINST THE UNDERSIDE OF THE FRAME WHILE TIGHTENING THE UPPER AIR SPRING BRACKET CAN RESULT IN COMPONENT DAMAGE AND PERSONAL INJURY OR PROPERTY DAMAGE.

2. Hold the air spring tight against the bottom frame flange and tighten upper air spring mounting fasteners to the frame per vehicle manufacturer's specifications.
3. Install the air spring lower mounting studs through the mounting bracket hole. Attach the ½" fasteners to the lower mounting stud of the air spring. Using **HAND TOOLS** only, tighten the locknut to 30 ± 5 foot pounds torque, see Figure 8-1.
4. Connect the air line to the air spring, see vehicle manufacturer's instructions.
5. See additional Air Spring Cautions and Warnings in the Important Safety Notice section of this publication prior to deflating or inflating the air system.
6. Inflate the suspension by connecting the height control valve linkage to the height control valve arm, see vehicle manufacturer's instructions.
7. Remove the frame supports.
8. Remove the wheel chocks.

LIFT AIR SPRING

WARNING

PRIOR TO AND DURING DEFLATION AND INFLATION OF THE AIR SUSPENSION SYSTEM, ENSURE ALL PERSONNEL AND EQUIPMENT ARE CLEAR FROM UNDER THE VEHICLE AND AROUND THE SERVICE AREA, FAILURE TO DO SO CAN CAUSE SERIOUS PERSONAL INJURY, DEATH, OR PROPERTY DAMAGE.

DISASSEMBLY

1. Follow Steps 1 through 6 of Ride Air Spring Disassembly in this section.
2. Loosen lift air spring fasteners from the rear side of the hanger.

3. Lower the lift axle into full rebound to access the fasteners that connects the lift air spring to the paddle.
4. Remove lift air spring.

FIGURE 8-2

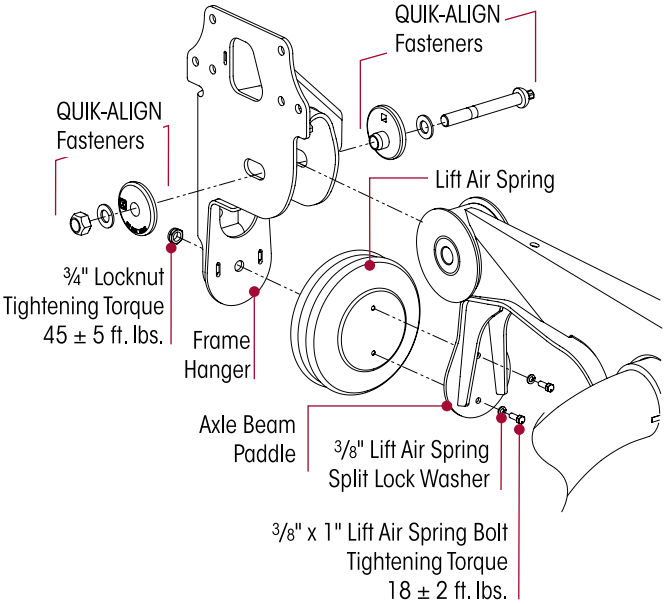

ASSEMBLY

1. Install the lift air spring between the axle beam paddle and frame hanger.
2. Install the ⅜" mounting fasteners through the axle beam paddle and tighten to 🔧 18 ± 2 foot pounds torque, see Figure 8-2.
3. Install the ¾" mounting fasteners to frame hanger and tighten to 🔧 45 ± 5 foot pounds torque, see Figure 8-2.
4. Follow Steps 4 to 9 of Ride Air Spring Assembly in this section.

SHOCK ABSORBER

NOTE It is not necessary to replace shock absorber in pairs if only one (1) shock absorber requires replacement.

FIGURE 8-3

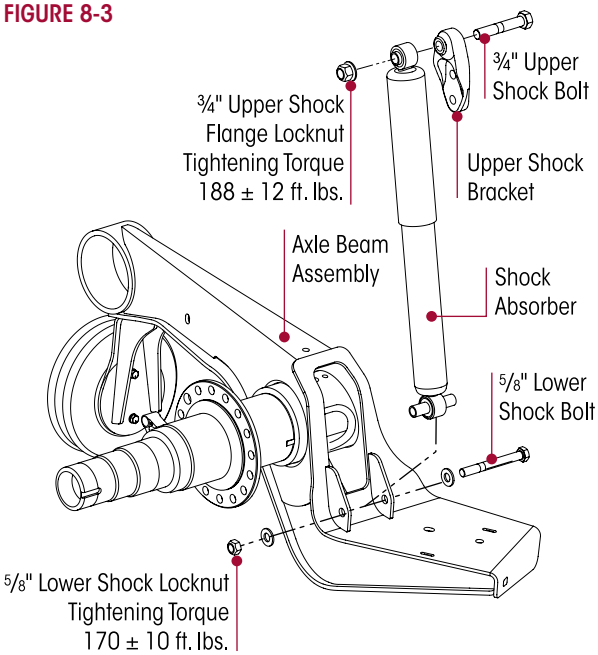

DISASSEMBLY

1. Chock the front wheels of the vehicle.
2. Remove and discard the ¾" locknut from the upper shock absorber bracket.
3. Remove and discard the ⅝" lower shock absorber fasteners that connect to the axle beam assembly, see Figure 8-3.
4. Compress the shock absorber and slide out from upper mounting bolt.
5. Remove the shock absorber.

ASSEMBLY

1. Install the shock absorber into the **upper** shock absorber bracket. Attach the ¾" upper shock locknut (see Figure 8-3) and tighten to 🔧 188 ± 12 foot pounds torque.
2. Install the lower shock absorber to the axle beam assembly. Attach the **lower** shock absorber fasteners and tighten to 🔧 170 ± 10 foot pounds torque, see Figure 8-3.
3. Remove the wheel chocks.

AXLE BEAM ASSEMBLY

NOTE Hendrickson recommends when servicing one (1) TRI-FUNCTIONAL bushing or thrust washer that all TRI-FUNCTIONAL bushings and thrust washers be replaced.

DISASSEMBLY

1. Chock the wheels.
2. Support the frame of the vehicle at ride height with safety stands.
3. Disconnect the height control valve's leveling valve arm(s) from the rubber grommet, see vehicle manufacturer's instructions.

WARNING

PRIOR TO AND DURING DEFLATION AND INFLATION OF THE AIR SUSPENSION SYSTEM, ENSURE ALL PERSONNEL AND EQUIPMENT ARE CLEAR FROM UNDER THE VEHICLE AND AROUND THE SERVICE AREA, FAILURE TO DO SO CAN CAUSE SERIOUS PERSONAL INJURY, DEATH, OR PROPERTY DAMAGE.

WARNING

LIFT AXLE RAPID AUTOMATIC MOVEMENT

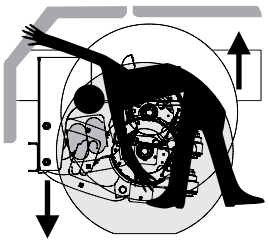

LIFT AXLE RAPID, AUTOMATIC MOVEMENT CAN CAUSE SEVERE PERSONAL INJURY OR DEATH.

THE LIFT AXLE CONTROL SYSTEM IS PROGRAMMED TO AUTOMATICALLY:

LOWER THE LIFT AXLE IF –

- A LOAD ON THE PRIMARY REAR SUSPENSION IS ABOVE A PRESET VALUE, OR
- THE PARKING BRAKE IS ENGAGED, OR
- THE IGNITION SWITCH IS OFF, OR
- A MAJOR SYSTEM FAULT IS DETECTED

RAISE THE LIFT AXLE IF –

- 1) THE PARKING BRAKE IS DISENGAGED, AND 2) A LOAD ON THE PRIMARY REAR SUSPENSION IS BELOW A PRE-SET VALUE.

WARNING

LIFT AXLE LOADING / UNLOADING

- ENSURE ALL PERSONNEL ARE CLEAR OF LIFT AXLE DURING VEHICLE LOADING / UNLOADING AND OPERATION.
- ENGAGE THE PARKING BRAKE DURING VEHICLE LOADING / UNLOADING.

WARNING

PRIOR TO SERVICE

- EXHAUST ALL PRESSURE IN LIFT AXLE AIR SPRINGS AND VEHICLE AIR SYSTEM BEFORE WORKING ON OR AROUND LIFT AXLE.
- REMOVE 15 AMP FUSE FROM F15 LOCATION, REFER TO HENDRICKSON LITERATURE NO. 17730-310.

4. See additional Air Spring Cautions and Warnings in the Important Safety Notice section of this publication prior to deflating or inflating the air system.
5. Lower the height control valve arm(s) to exhaust the air in the air springs and deflate the suspension. Verify that the air springs are deflated. See vehicle manufacturer's instructions.
6. Remove tires.
7. Remove wheel ends.
8. Remove brake assemblies.
9. Remove the fasteners that attach the ride air spring to the axle beam assembly and remove the ride air spring, see Figure 8-1.
10. Remove the fasteners that attach the lift air spring to the axle beam paddle and remove the lift air spring, see Figure 8-2.
11. Remove the **lower** shock absorber fasteners that attach to the axle beam assembly and remove the shock absorber, see Figure 8-3.

12. Remove QUIK-ALIGN and discard fasteners, see Figure 8-4.
13. Remove the axle beam assembly and thrust washers from the frame hanger. Discard thrust washers.

ASSEMBLY

1. Attach new thrust washers to axle beam assemblies.
2. Install axle beam assembly into the hanger.
3. Install new QUIK-ALIGN fasteners, and snug, **DO NOT** tighten at this time.
4. Install the **lower** shock absorber fasteners and tighten to 170 ± 10 foot pounds torque
5. Install the lift air spring to the beam paddle and tighten to 18 ± 2 foot pounds torque
6. Install the ride air spring to axle beam assembly and tighten to 30 ± 5 foot pounds torque

WARNING

PRIOR TO AND DURING DEFLATION AND INFLATION OF THE AIR SUSPENSION SYSTEM, ENSURE ALL PERSONNEL AND EQUIPMENT ARE CLEAR FROM UNDER THE VEHICLE AND AROUND THE SERVICE AREA, FAILURE TO DO SO CAN CAUSE SERIOUS PERSONAL INJURY, DEATH, OR PROPERTY DAMAGE.

7. See additional Air Spring Cautions and Warnings in the Important Safety Notice section of this publication prior to deflating or inflating the air system.
8. Install brake assemblies.
9. Install wheel ends.
10. Install tires.
11. Inflate the suspension slowly and verify that the air spring bladder inflates uniformly without binding.
12. Reconnect the height control linkage assembly to the height control valve arm per vehicle manufacturer's instructions.
13. Remove the frame supports.
14. Remove the wheel chocks.
15. Perform vehicle alignment, refer to Alignment & Adjustments section of this publication.
16. Tighten shear round head bolts to shear (550 foot pounds torque).

TRI-FUNCTIONAL BUSHING

YOU WILL NEED

- TRI-FUNCTIONAL III Bushing Tool, see Special Tool Section in this publication

DISASSEMBLY

1. Chock the wheels and exhaust the air system.
2. Remove tires.
3. Place a jack under the suspension axle beam assembly.
4. Remove and discard QUIK-ALIGN connection fasteners from the frame hanger, see Figure 8-4.

FIGURE 8-4

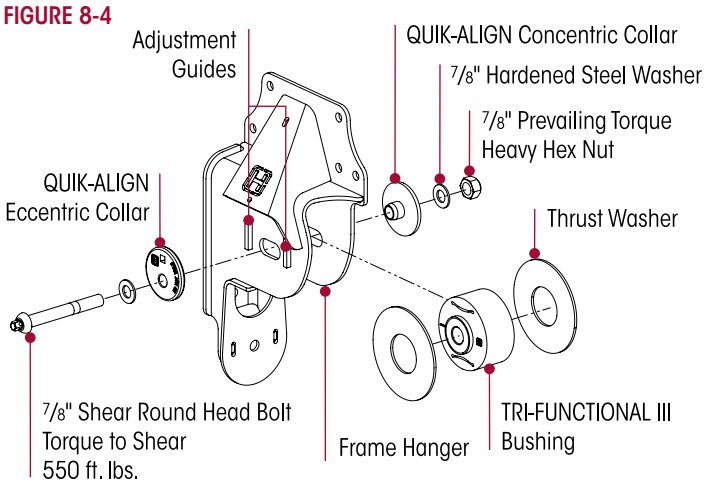

NOTE

The QUIK-ALIGN bolt features a round head that helps to prevent reuse. Install the bolt from the outboard side of the frame hanger and tighten with a QUIK-ALIGN socket tool (see Special Tool section in this publication) until the bolt's round head shears off. To avoid damage to the splines on the shear bolt head, ensure the socket tool fully engages the bolt head.

5. Remove the concentric and eccentric alignment collars. QUIK-ALIGN collars can be reused if not damaged.

WARNING

HENDRICKSON DOES NOT AUTHORIZE REUSE OF THE SHEAR ROUND BOLT. WHENEVER THE QUIK-ALIGN CONNECTION IS DISASSEMBLED THE EXISTING SHEAR-TYPE BOLT MUST BE REMOVED BY GRINDING OR ANY OTHER APPROPRIATE METHOD AND DISCARDED AND THE EXISTING HEX NUT. A NEW SHEAR ROUND BOLT AND HEX NUT MUST BE INSTALLED AND SHEARED TO ACHIEVE THE PROPER TORQUE AND CLAMP FORCE. ANYONE WHO ASSEMBLES THE QUIK-ALIGN CONNECTION (OEM'S, DEALERS, REPAIR FACILITIES, ETC.) IS RESPONSIBLE FOR THE PROPER INSTALLATION OF THE SHEAR-TYPE BOLT. FAILURE TO REACH THE REQUIRED TORQUE CAN RESULT IN AN INSUFFICIENT CLAMP FORCE, UNRELIABLE AXLE ALIGNMENT, INJURY OR PROPERTY DAMAGE.

6. Use a jack to lower the lift axle beam assembly out of the frame hanger.
7. Remove and discard the thrust washers.
8. Prior to removal of the TRI-FUNCTIONAL bushing, locate the bushing **index mark** on a small dimple or indent on the side the axle beam assembly end hub (see Figure 8-5) and the position of the TRI-FUNCTIONAL **bushing locator**. If the index mark is visible proceed to Step 9, if not proceed to Step 9 to mark the position of the bushing.

FIGURE 8-5

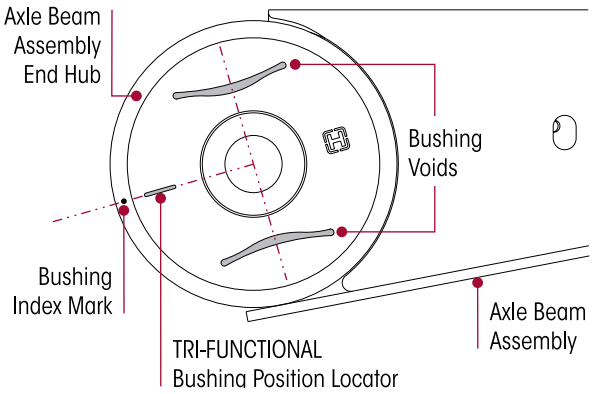

SERVICE HINT

If the index mark is not visible on the axle beam assembly end hub, use the bushing position locator as a reference for scribing the bushing orientation line.

9. Use a square and the TRI-FUNCTIONAL **bushing position locator** as a reference point, scribe or draw a line on the outside of the axle beam assembly end hub as shown in Figure 8-6. This line marks the orientation of the existing bushing within the axle beam assembly end hub and will be used to properly orient the replacement TRI-FUNCTIONAL bushing during installation, see Figure 8-7.
10. Ensure the TRI-FUNCTIONAL bushing voids (see Figure 8-5) are vertically centered when the suspension is at ride height.

FIGURE 8-6

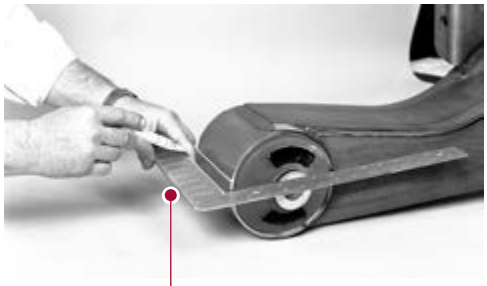

FIGURE 8-7

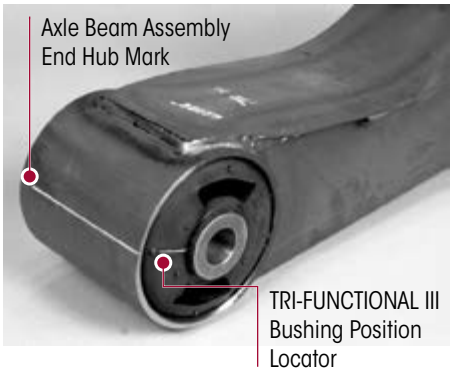

CAUTION DO NOT USE M EXTREME-PRESSURE LUBE ON THE TRI-FUNCTIONAL BUSHING. IT IS INTENDED ONLY ON THE TRI-FUNCTIONAL III TOOL.

11. Apply M extreme-pressure lube (provided with TRI-FUNCTIONAL III Bushing Tool) to the:
    - Threads of the hex-head bolt, see Figure 8-8.
    - Internal parts of the thrust bearing and external surfaces of the tool thrust washers, see Figures 8-9 and 8-10.

FIGURE 8-8

FIGURE 8-9

FIGURE 8-10

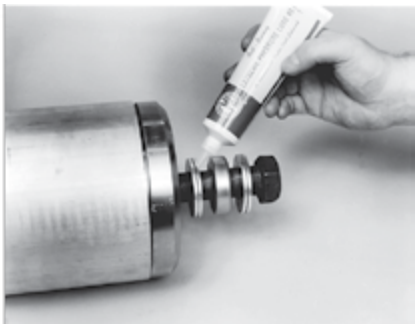

12. Assemble the TRI-FUNCTIONAL III Bushing Tool, hex-head bolt, washers, tool thrust bearing and front plate, as shown in Figure 8-11.

IMPORTANT The tapered end of the transition tube **MUST** be positioned against the axle beam assembly end hub during bushing removal, see Figure 8-11.

NOTE There must be two (2) tool thrust washers on each side of the thrust bearing, see Figure 8-11.

FIGURE 8-11 **TRI-FUNCTIONAL III Bushing Tool Part No. 66086-122**

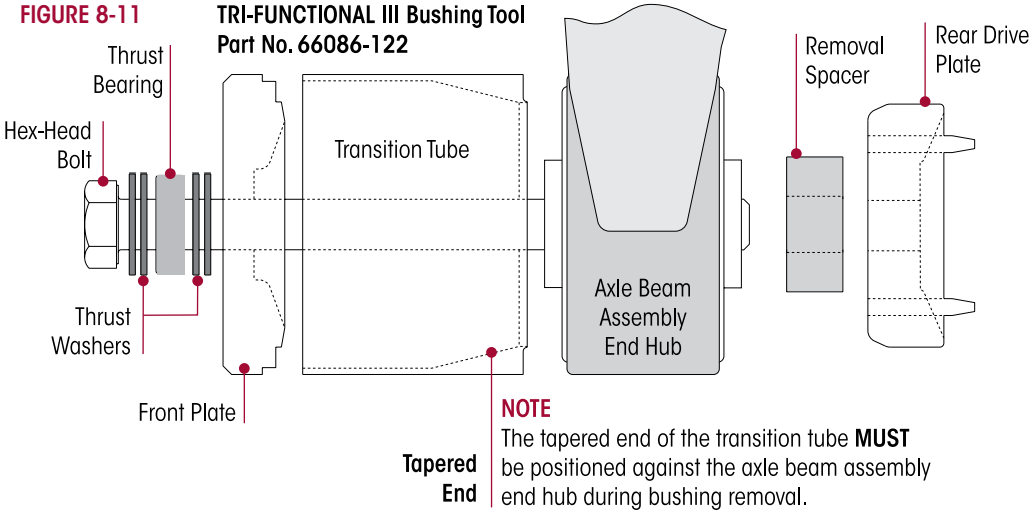

13. Insert the hex-head bolt of the partially assembled tool through the bushing until the transition tube rests squarely on the axle beam assembly end hub, see Figure 8-12.

FIGURE 8-12

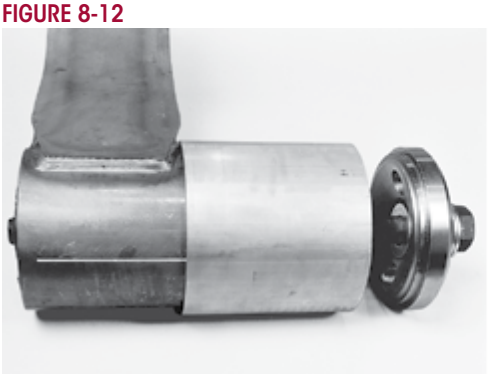

FIGURE 8-13

FIGURE 8-14

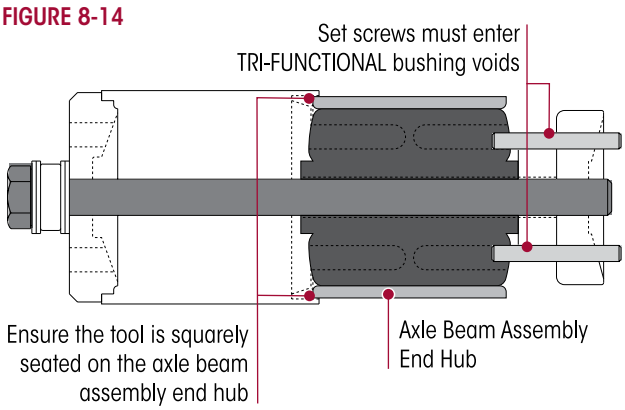

FIGURE 8-15

14. Slide the removal spacer over the exposed hex-head bolt threads on the opposite side of the axle beam assembly end hub, see Figure 8-13.
15. Thread the rear drive plate (flat side first) onto the hex-head bolt. The two (2) set screws must enter the bushing voids (open areas) to prevent the rear drive plate from turning, see Figure 8-14.
16. Hand tighten the hex-head bolt until snug. Make sure the tool rests squarely on the axle beam assembly end hub, see Figure 8-14.

NOTE The tool thrust bearing needs to be free to turn to prevent binding or damage to the threads of the hex-head bolt during the removal process, see Figure 8-15.

NOTE The use of a **one-inch impact wrench is not recommended**, doing so could damage to the hex-head bolt threads.

FIGURE 8-16

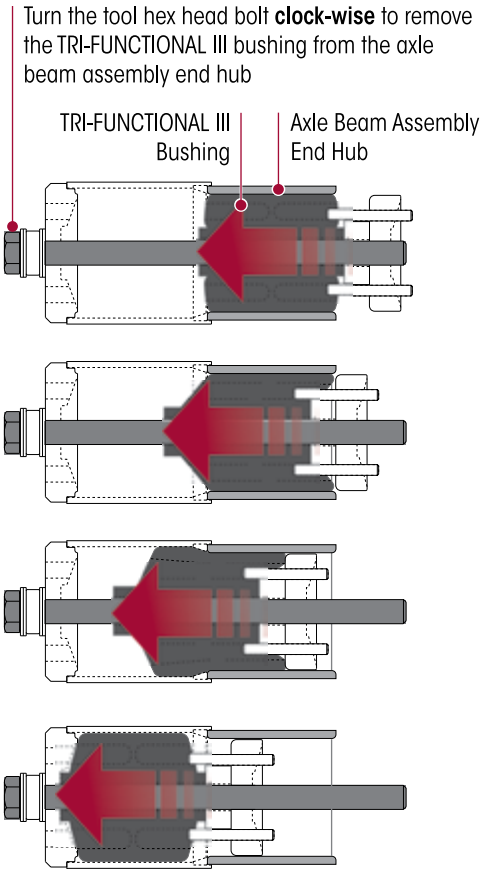

17. Use a ¾" impact wrench and a 1 11/16" heavy-duty (six-point) impact socket, remove the bushing by turning the hex-head bolt clock-wise as shown in Figure 8-16.
18. Ensure the transition tube remains seated against the axle beam assembly end hub during the entire bushing removal procedure.

SERVICE HINT If the hex-head bolt stops turning during the removal process, reverse the impact wrench and loosen the tool assembly. Check the tool for damage, reset the rear drive plate and try again. As a last resort, a small amount of heat may be required to break the TRI-FUNCTIONAL III bushing loose, see Figure 8-17. **DO NOT OVERHEAT** the axle beam assembly end hub. Allow the axle beam assembly end hub to cool before installing the new bushing.

FIGURE 8-17

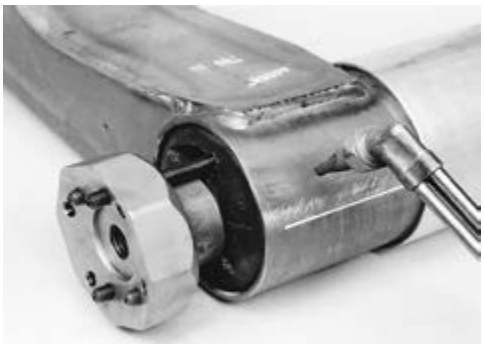

19. After the TRI-FUNCTIONAL III bushing removal, reverse the impact wrench to disassemble the tool.

ASSEMBLY

NOTE Whenever the QUIK-ALIGN style TRI-FUNCTIONAL bushing is disassembled or loosened for any reason, the shear-type bolt and nut must be removed and discarded. A new shear-type bolt and nut must be used for bushing reassembly.

1. Clean the axle beam assembly end hub on the truck suspension beam. All rust, rubber, scale and other buildup must be removed from the inside surface of the axle beam assembly end hub before the replacement bushing can be installed. The axle beam assembly end hub must also be cool to the touch.
2. Check the edges of the axle beam assembly end hub for burrs or sharp edges. Remove any burrs or sharp edges with a grinding tool, see Figure 8-18. Also evaluate the edges of the axle beam assembly end hub for wear. Refer to Axle Beam Assembly End Hub inspection procedure in the Preventive Maintenance section of this publication.

NOTE **DO NOT** substitute lubricants. The only lubricant that should be used on the TRI-FUNCTIONAL bushing, axle beam assembly end hub and transition tube is included in the TRI-FUNCTIONAL bushing replacement service kits (Hendrickson rubber assembly oil).

3. Use Hendrickson rubber assembly oil (included in service kit) to lubricate the inside of the axle beam assembly end hub, the outside diameter of the replacement TRI-FUNCTIONAL bushing and the inside of the transition tube.
4. Use a square, scribe or draw a line on the transition tube as shown in Figure 8-19. This line will be used to properly orient the bushing during installation.
5. Insert the bushing into the transition tube. Align the position locator on the bushing with the line drawn on the transition tube, see Figure 8-20.

FIGURE 8-18

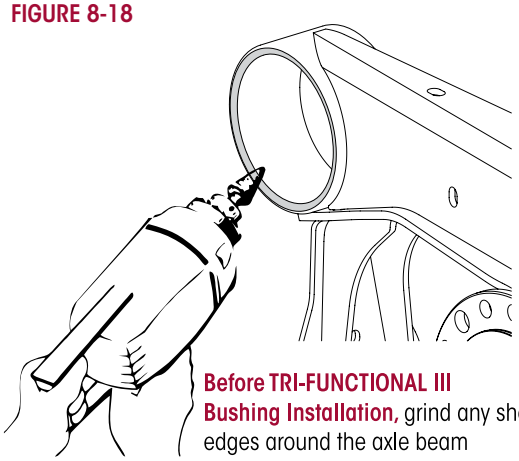

Before TRI-FUNCTIONAL III Bushing Installation, grind any sharp edges around the axle beam assembly end hub to the radius of minimum 1/8" to maximum 3/16"

NOTE Make sure the position locator on the bushing is aligned with the line drawn on the transition tube.

FIGURE 8-19

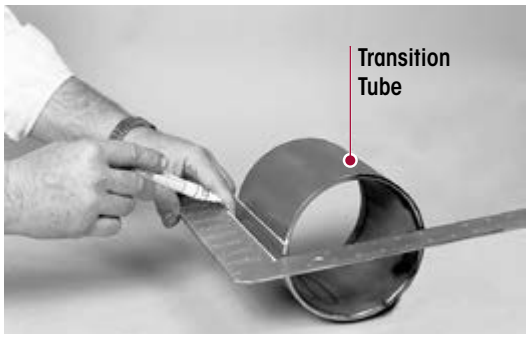

FIGURE 8-20

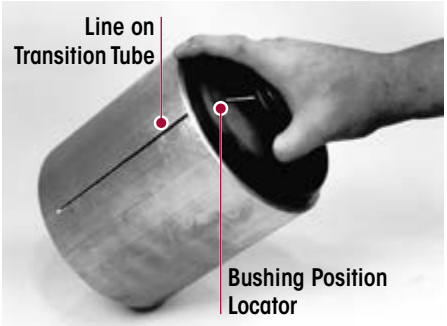

CAUTION DO NOT USE M EXTREME-PRESSURE LUBE ON THE TRI-FUNCTIONAL BUSHING. IT IS INTENDED ONLY ON THE TRI-FUNCTIONAL III TOOL.

6. Apply M extreme-pressure lube (provided with TRI-FUNCTIONAL III Bushing Tool) to the:
   - Threads of the hex-head bolt, see Figure 8-21.
   - Internal parts of the thrust bearing and external surfaces of the tool thrust washers, see Figures 8-22 and 8-23.

FIGURE 8-21

FIGURE 8-22

FIGURE 8-23

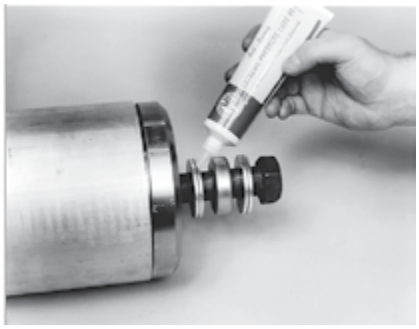

7. Assemble the TRI-FUNCTIONAL III Bushing Tool, hex-head bolt, washers, tool thrust bearing and front plate, as shown in Figure 8-24. Ensure there are two (2) washers on each side of the thrust bearing, and one (1) washer on the inboard side of the front plate.

NOTE It may be necessary to add another washer on the inboard side of the TRI-FUNCTIONAL tool front plate to facilitate removal.

FIGURE 8-24

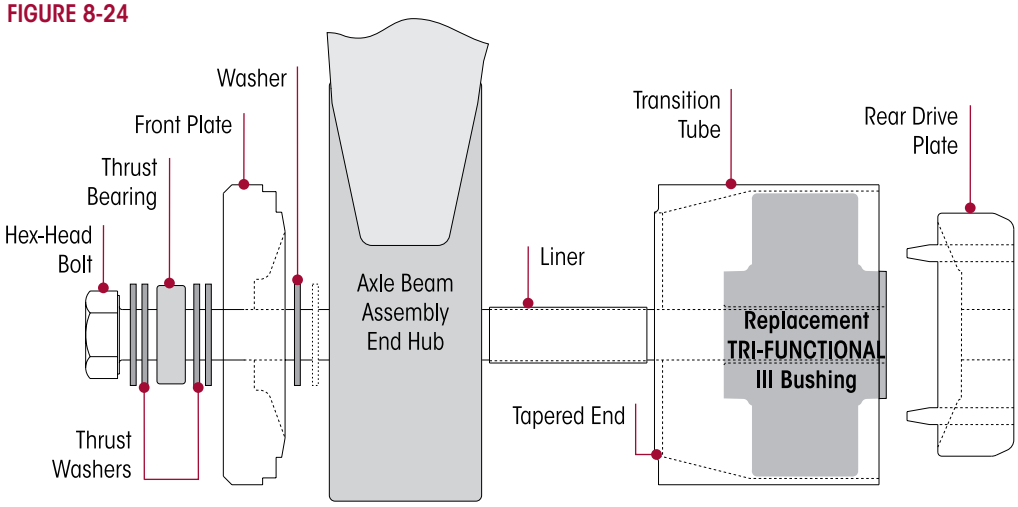

8. Insert the tool hex-head bolt of the partially assembled tool through the axle beam assembly end hub. If no axle beam assembly end hub wear was detected in Step 2, the assembled tool can be inserted into either side of the axle beam assembly end hub. However, if the axle beam assembly end hub wear is detected proceed to Step 9.
9. If axle beam assembly end hub wear is detected, the assembled tool must be inserted into the **UNWORN** side of the axle beam assembly end hub, see Figure 8-25, the replacement TRI-FUNCTIONAL III bushing can be installed from the **WORN** (lubricated with Hendrickson rubber assembly oil, included in service kit) side of the axle beam assembly end hub.
10. Slide the transition tube and bushing assembly onto the hex-head bolt.

IMPORTANT The tapered end of the transition tube **MUST** be positioned against the axle beam assembly end hub during bushing removal, see Figure 8-24.

NOTE There must be two (2) tool thrust washers on each side of the thrust bearing, see Figure 8-24.

FIGURE 8-25

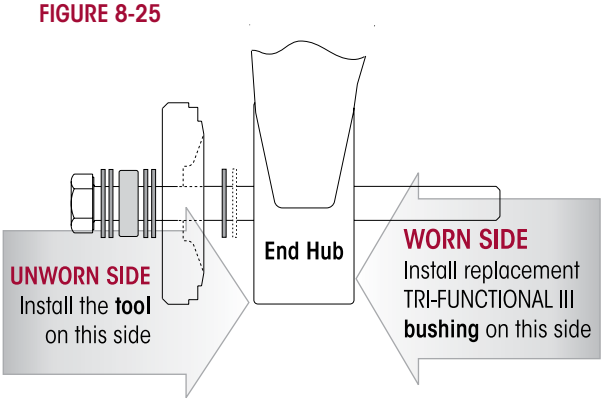

FIGURE 8-26

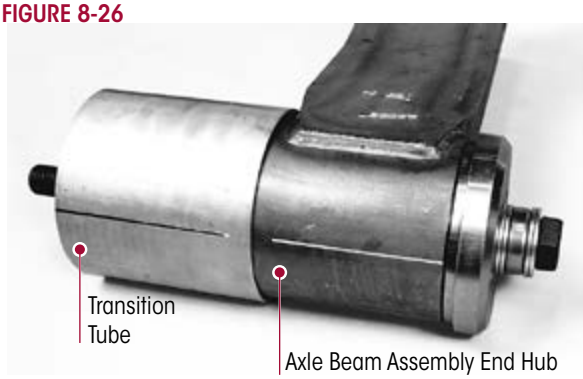

11. Align the line drawn on the transition tube with the line drawn on the axle beam assembly end hub, see Figure 8-26.

NOTE Ensure the TRI-FUNCTIONAL bushing position locator is aligned with the line on the transition tube.

NOTE The removal spacer required for bushing removal **IS NOT** used for bushing installation.

FIGURE 8-27

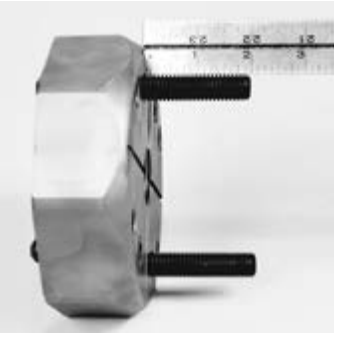

12. Configure the set screws in the rear drive plate as follows:
    - Thread all four (4) set screws (two- and four-inch) into the appropriate holes in the concave side of the rear drive plate. The two-inch set screws should be flush with the flat side of the rear drive plate and the four-inch set screws should extend two inches beyond the flat side of the rear drive plate as shown in Figure 8-27. All four (4) set screws should be installed in the holes marked **HVY**.
13. Thread the rear drive plate (concave side first) onto the hex-head bolt. All four (4) set screws must enter the bushing voids (open areas) to prevent the rear drive plate from turning, see Figure 8-28.
14. Push the tool parts together, making sure the front plate is squarely seated on one side of the axle beam assembly end hub and the transition tube is squarely seated on the other side, see Figure 8-29. Hand tighten the hex-head bolt.
15. Snug the hex-head bolt with a 1 11/16" wrench and recheck the alignment of the tool on the axle beam assembly end hub. Make sure the tool is squarely seated on each side of the axle beam assembly end hub, the set screws are in the bushing voids, the rear drive plate is squarely seated on the replacement bushing and the line on the transition tube is aligned with the line on the axle beam assembly end hub.

NOTE The bearing needs to be free to turn to prevent binding or damage to the threads of the hex-head bolt during the removal process, see Figure 8-29.

16. Use a ¾" impact wrench and a 1 11/16" heavy-duty (six-point) impact socket, install the bushing by turning the hex-head bolt clockwise, see Figure 8-30. When the bushing is approximately halfway in the axle beam assembly end hub, the impact wrench may slow down. After a very short time, the wrench will pick up speed again.

NOTE If the rear drive plate is not sitting squarely on the bushing, rubber will extrude around the sides of the rear drive plate and stop any movement of the bushing. If the impact wrench stops, reverse the impact wrench and squarely reset the rear drive plate on the bushing.

FIGURE 8-28

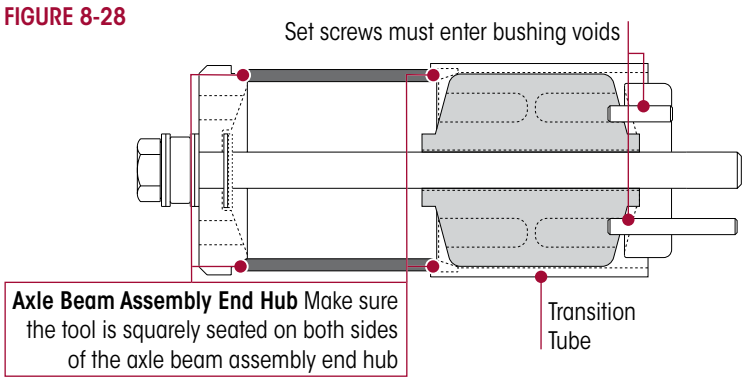

FIGURE 8-29

FIGURE 8-30

FIGURE 8-31

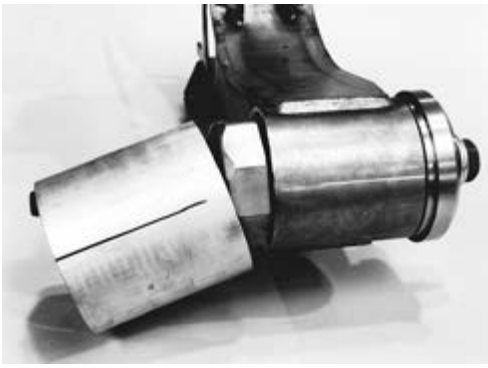

17. Continue to tighten until the hex-head bolt almost stops turning. The transition tube will fall away before the bushing is fully seated in the axle beam assembly end hub and the hex-head bolt stops turning, see Figure 8-31.

CAUTION DO NOT ALLOW THE TRANSITION TUBE TO FALL TO THE FLOOR. TRANSITION TUBE DAMAGE OR PERSONAL INJURY COULD RESULT.

NOTE **DO NOT** over torque the hex-head bolt. Damage to the hex-head bolt, front drive plate or rear drive plate could occur. If all procedures are followed properly, the impact wrench will install the bushing in less than one (1) minute.

18. With the bushing installed, verify that the bushing position locator is aligned with the bushing index mark or with the line drawn on the outside of the axle beam assembly end hub.
19. Disassemble, clean and store the tool in a clean, dry place.
20. Use a jack, carefully raise the suspension beam into place in the frame hanger.
21. Install new thrust washers as shown in Figure 8-32.

FIGURE 8-32

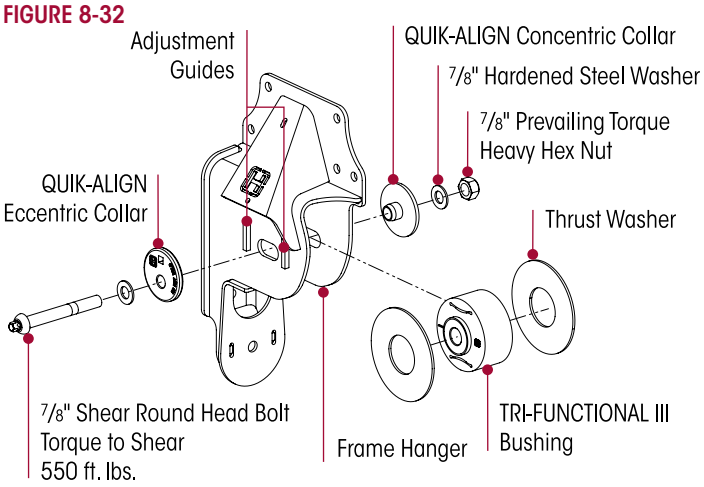

CAUTION

DO NOT TACK WELD THE SHEAR ROUND HEAD BOLT TO THE ALIGNMENT COLLAR. DOING SO WILL PREVENT THE SHEAR ROUND HEAD BOLT TO SHEAR PROPERLY WHEN TIGHTENING. FAILURE TO FOLLOW THESE TRI-FUNCTIONAL BUSHING ASSEMBLY PROCEDURES AND TO PROPERLY TORQUE THE FASTENERS COULD RESULT IN A FAILED BUSHING AND DAMAGE TO THE AXLE, SUSPENSION OR VEHICLE.

22. Install the eccentric collar on the outboard side and the concentric collar on the inboard side of the hanger, see Figure 8-32.

IMPORTANT

Whenever the QUIK-ALIGN style TRI-FUNCTIONAL bushing is disassembled or loosened for any reason, the shear-type bolt and nut must be removed and discarded. A new shear-type bolt and nut must be used for bushing reassembly.

23. Install new QUIK-ALIGN fasteners. Install the 7/8" shear round head bolt from the outboard side of the frame hanger. Install the 7/8" washer and locknut on the inboard side and tighten to 50 to 100 foot pounds. **DO NOT** tighten to torque at this time.
24. Check the alignment and adjust if necessary. See Alignment & Adjustments section of this publication.
25. Once the correct axle alignment is achieved, use the QUIK-ALIGN socket tool and a calibrated torque wrench to tighten the shear round head bolts to shear (550 foot pounds torque).

FRAME HANGER

FIGURE 8-33

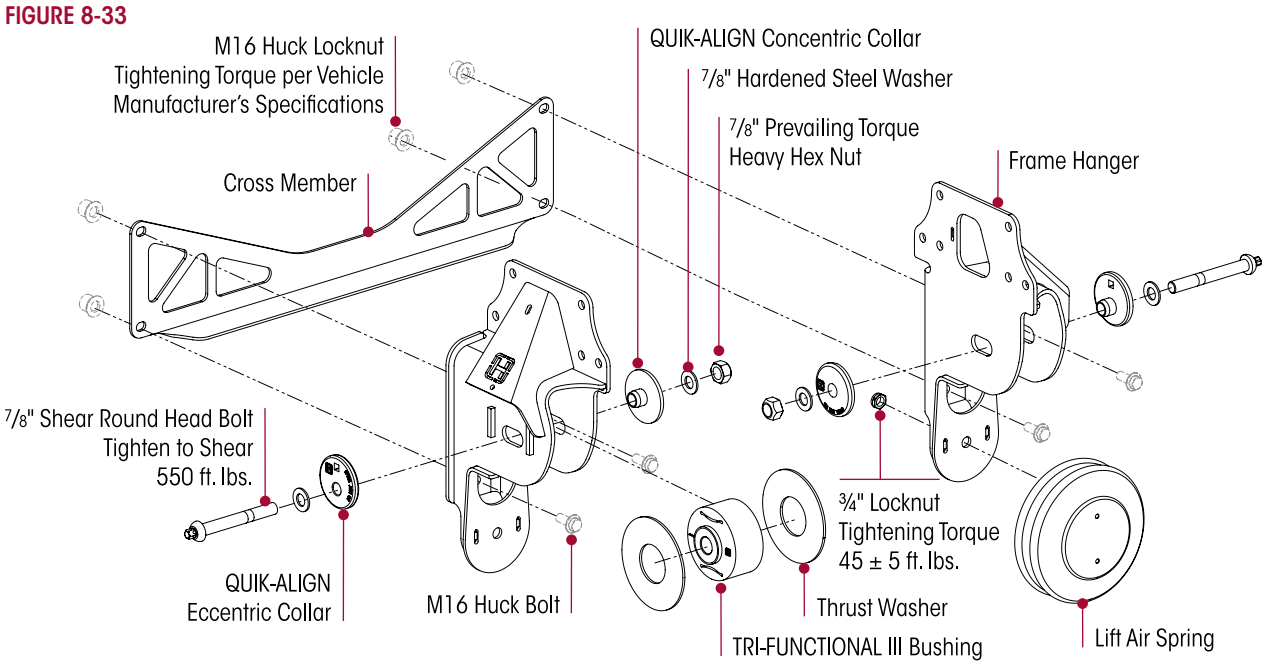

DISASSEMBLY

1. Chock the front wheels.
2. Support the frame of the vehicle at ride height with safety stands.

WARNING

THE VEHICLE MUST BE FIRMLY SUPPORTED WITH SAFETY STANDS PRIOR TO SERVICING. FAILURE TO DO SO CAN RESULT IN PERSONAL INJURY OR PROPERTY DAMAGE.

WARNING

PRIOR TO AND DURING DEFLATION AND INFLATION OF THE AIR SUSPENSION SYSTEM, ENSURE ALL PERSONNEL AND EQUIPMENT ARE CLEAR FROM UNDER THE VEHICLE AND AROUND THE SERVICE AREA, FAILURE TO DO SO CAN CAUSE SERIOUS PERSONAL INJURY, DEATH, OR PROPERTY DAMAGE.

3. See additional Air Spring Cautions and Warnings in the Important Safety Notice section of this publication prior to deflating or inflating the air system.

4. Lower the height control valve arm(s) to exhaust the air in the air springs and deflate the suspension. Verify that the air springs are deflated. See vehicle manufacturer's instructions.

SERVICE HINT

Each frame hanger will have a pair of QUIK-ALIGN collars. Any eccentric (with the square drive feature) QUIK-ALIGN collar should be mounted on the outboard side of the frame hanger. Axle thrust angles can only be corrected on frame hangers equipped with eccentric QUIK-ALIGN collars.

SERVICE HINT

Mark the position of the QUIK-ALIGN square drive in relationship to the frame hanger with a paint stick prior to loosening the QUIK-ALIGN connection. This will facilitate the axle alignment process after the repair is complete.

5. Remove the QUIK-ALIGN fasteners and collars, see Figure 8-33. Discard the fasteners. The collars may be reused if they are not damaged.
6. Remove the lift air spring.
7. Remove the fasteners that attach the frame hanger to the vehicle per the vehicle manufacturer's specifications.
8. Remove the frame hanger.
9. Inspect mounting surface for any damage or wear.
10. Inspect the QUIK-ALIGN bushing for wear or damage, replace as necessary, refer to the Preventative Maintenance section in this publication.

ASSEMBLY

1. Slide the new frame hanger over the axle beam assembly QUIK-ALIGN bushing.
2. Install the new fasteners that attach the frame hanger to the vehicle and tighten per the vehicle manufacturer's specifications.
3. Install the M16 frame hanger fasteners that attach to the cross member and tighten per the vehicle manufacturer's specifications.

⚠ WARNING

DISCARD USED QUIK-ALIGN FASTENERS. ALWAYS USE NEW QUIK-ALIGN FASTENERS TO COMPLETE A REPAIR. FAILURE TO DO SO COULD RESULT IN FAILURE OF THE PART, OR MATING COMPONENTS, ADVERSE VEHICLE HANDLING, PERSONAL INJURY, OR PROPERTY DAMAGE.

DO NOT ASSEMBLE QUIK-ALIGN JOINT WITHOUT THE PROPER FASTENERS. USE ONLY QUIK-ALIGN FASTENERS TO SUSTAIN PROPER CLAMP FORCE. FAILURE TO DO SO CAN CAUSE ADVERSE VEHICLE HANDLING, PROPERTY DAMAGE OR PERSONAL INJURY AND VOID WARRANTY. ENSURE THAT THE QUIK-ALIGN FASTENER'S TORQUE VALUES ARE SUSTAINED AS RECOMMENDED IN THE TORQUE SPECIFICATIONS SECTION OF THIS PUBLICATION. FAILURE TO DO SO CAN CAUSE ADVERSE VEHICLE HANDLING RESULTING IN PERSONAL INJURY OR PROPERTY DAMAGE.

NOTE

Use a new QUIK-ALIGN kit (see the Parts List Section of this publication) for any axle alignment or disassembly of the QUIK-ALIGN connection. This will help ensure that the proper clamp load is applied to the connection and help prevent the joint to slip in service.

4. Install the QUIK-ALIGN collars and the new mounting hardware that attach the axle beam assembly to the frame hanger, see Figure 8-33. Verify that the nose of each QUIK-ALIGN collar is installed correctly into TRI-FUNCTIONAL bushing sleeve, and the flanged side is flat against the frame hanger face within the alignment guides.
5. Snug QUIK-ALIGN locknuts to 🔧 50 to 100 foot pounds torque, **DO NOT** tighten at this time.
6. Install lift air spring.
7. See additional Air Spring Cautions and Warnings in the Important Safety Notice section of this publication prior to deflating or inflating the air system.
8. Connect the air line to the air spring, see vehicle manufacturer's instructions.
9. Install wheel ends and tires.

10. Inflate the suspension by connecting the height control valve linkage to the height control valve arm, see vehicle manufacturer's instructions.
11. Remove the frame supports.
12. Remove the wheel chocks.

NOTE Axle alignment and QUIK-ALIGN final torque is necessary anytime the axle beam assembly is removed.

13. Check the alignment and adjust if necessary. See Alignment & Adjustments section of this publication.
14. Once the correct axle alignment is achieved, use a QUIK-ALIGN socket tool and a calibrated torque wrench to tighten the shear round head bolts to shear (550 foot pounds torque).

CROSS MEMBER

WARNING DO NOT USE THE CROSS MEMBER FOR JACKING OR AS A SUPPORT POINT FOR SERVICING THE VEHICLE.

IMPROPER JACKING AND SUPPORT METHODS WILL VOID HENDRICKSON'S WARRANTY AND CAN CAUSE STRUCTURAL DAMAGE THAT RESULT IN ADVERSE VEHICLE HANDLING, SEVERE PERSONAL INJURY OR DEATH. REFER TO THE VEHICLE MANUFACTURER FOR PROPER JACKING AND SUPPORT METHODS.

DISASSEMBLY

1. Chock the wheels.
2. Support the frame with safety stands.
3. Disconnect the height control valve's leveling valve arm(s) from the rubber grommet per vehicle manufacturer's instructions.

WARNING PRIOR TO AND DURING DEFLATION AND INFLATION OF THE AIR SUSPENSION SYSTEM, ENSURE THAT ALL PERSONNEL AND EQUIPMENT ARE CLEAR FROM UNDER THE VEHICLE AND AROUND THE SERVICE AREA, FAILURE TO DO SO CAN CAUSE SERIOUS PERSONAL INJURY, DEATH, OR PROPERTY DAMAGE.

4. See additional Air Spring Cautions and Warnings in the Important Safety Notice section of this publication prior to deflating or inflating the air system.
5. Lower the height control valve arm(s) to exhaust the air in the air springs and deflate the suspension, see vehicle manufacturer's instructions.
6. Verify that the air springs are deflated.
7. Remove the axle beam assemblies as shown in this section.
8. Remove the frame hanger fasteners that connect to the cross member per vehicle manufacturer's instructions, see Figure 8-34.

FIGURE 8-34

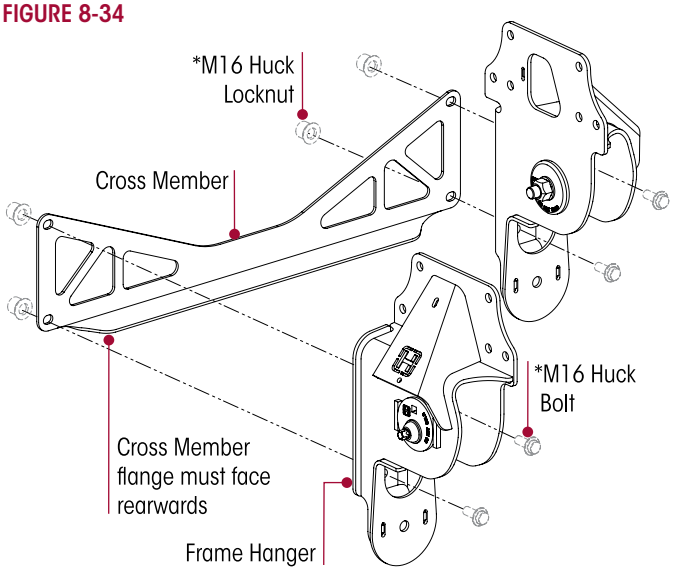

NOTE
*Huck fasteners are not supplied by Hendrickson. See vehicle manufacturer for installation specifications.

ASSEMBLY

1. Position the cross member against the frame hanger.
2. Install the cross member fasteners through the frame hanger, then through the cross member. Verify the fastener heads are on the inside of the frame hanger.
3. Tighten the cross member fasteners per vehicle manufacturer's specifications.
4. Attach axle beam assemblies as shown in this section.

WARNING

PRIOR TO AND DURING DEFLATION AND INFLATION OF THE AIR SUSPENSION SYSTEM, ENSURE THAT ALL PERSONNEL AND EQUIPMENT ARE CLEAR FROM UNDER THE VEHICLE AND AROUND THE SERVICE AREA, FAILURE TO DO SO CAN CAUSE SERIOUS PERSONAL INJURY, DEATH, OR PROPERTY DAMAGE.

5. See additional Air Spring Cautions and Warnings in the Important Safety Notice section of this publication prior to deflating or inflating the air system.
6. Inflate the suspension slowly and verify that the air spring bladder inflates uniformly without binding per vehicle manufacturer's instructions.
7. Reconnect the height control linkage assembly to the height control valve arm.
8. Remove the frame supports.
9. Remove the wheel chocks.

SECTION 9
Troubleshooting Guide

OPTIMAAX for Freightliner Vehicles

TROUBLESHOOTING GUIDE		
CONDITION	**POSSIBLE CAUSE**	**CORRECTION**
Vibration or shimmy of front axle during operation	Wheels and / or tires out of balance	Balance or replace wheels and / or tires
	Worn shock absorbers	Replace shock absorbers
	Broken engine mount	Replace engine mount
Excessive wear on tires or uneven tire tread wear	Tires have incorrect air pressure	Adjust tire pressure to manufacturer's specification.
	Tires out of balance	Balance or replace tires
	Incorrect tandem axle alignment	Align tandem axles
Suspension has harsh or bumpy ride	Air spring not inflated	Check air supply to air spring, repair as necessary
	Air spring ride height out of specification	Adjust the ride height to proper specification per the vehicle manufacturer
Vehicle leans	Ride height incorrect	Adjust ride height to specification per the vehicle manufacturer
	Air spring(s) are not inflated	Repair source of air pressure loss
	Excessive weight bias	Contact the vehicle manufacturer or Hendrickson Tech Services
Vehicle wanders	Fifth wheel not greased	Grease the fifth wheel
	Rear ride height out of adjustment	Adjust ride height to specification per the vehicle manufacturer
	Front ride height out of adjustment	
Not getting the desired load on the axle	Not having proper air pressure to the ride bags	Refer to Hendrickson literature number 17730-310
	Air control system not properly installed	Check plumbing of air system, refer to vehicle manufacturer
	Mounted too high Incorrect ride height specification	a. Larger tire b. Change axle seat height
Unit not getting the correct lift	Lift air springs not getting proper air pressure	Refer to Hendrickson literature number 17730-310
	Interference with chassis, drive line or other components	Inspect for interference
	Unit not installed properly	Check installation with factory installation drawing
Unit has vertical hop	Not running sufficient load	Increase air pressure
	Unbalanced tires	Balance tires
Axle Shimmy	Axle bolt connection loose	Re-torque to factory torque values, see Torque Specification section in this publication
	Pivot bolt connection loose	Re-torque to factory torque values, see Torque Specification section in this publication
	Axle out of alignment	Re-align axle
	Tires different size on each side	Use same size tires
	Tires unbalanced	Balance tires
	Air pressure in tires different from side to side	Equalize air pressure

SECTION 10
Torque Specifications

Hendrickson recommended torque values provided in Foot Pounds and in Newton Meters

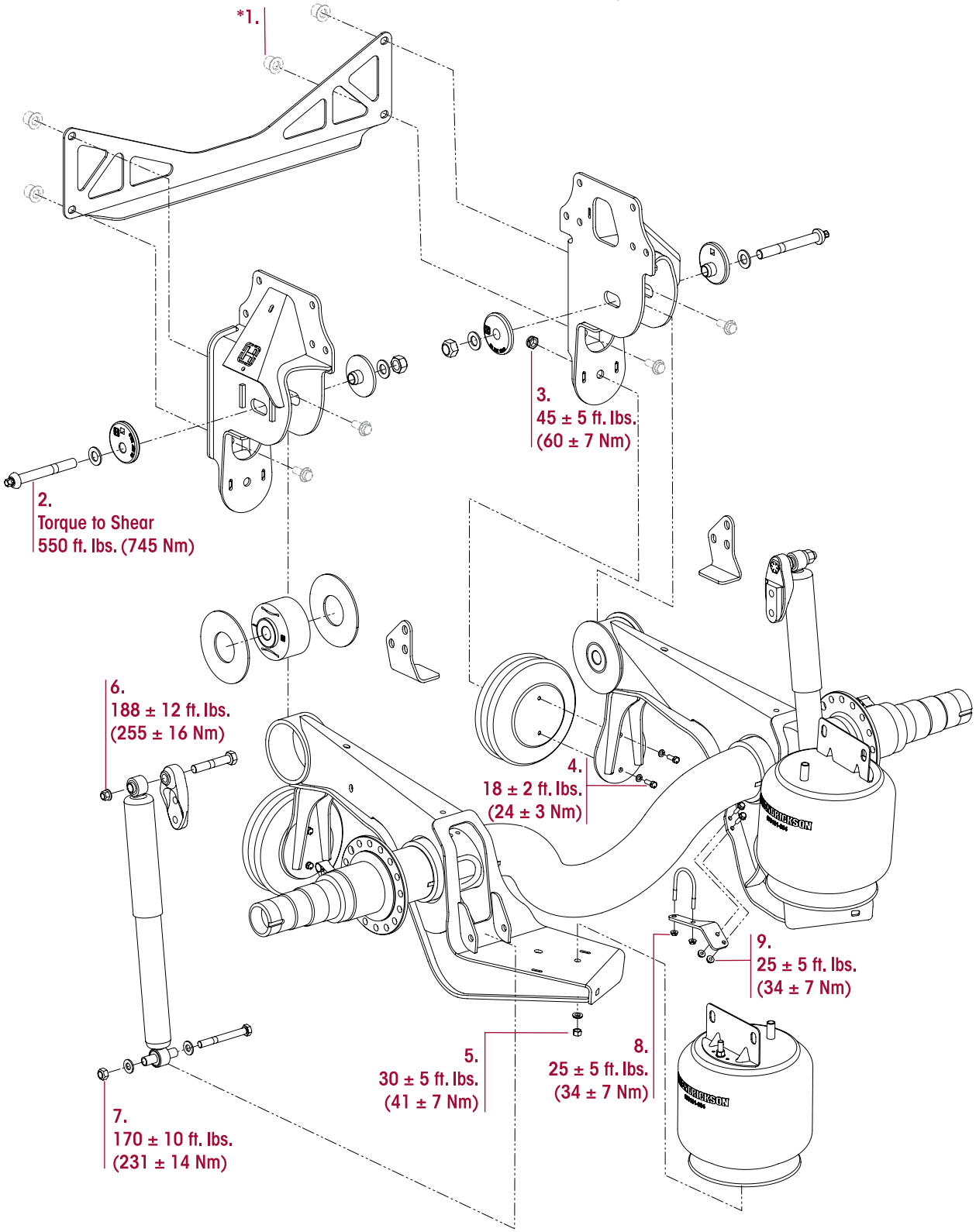

OPTIMAAX for Freightliner Vehicles

HENDRICKSON RECOMMENDED TORQUE SPECIFICATIONS					
NO.	COMPONENT	FASTENER		TORQUE VALUE	
		QUANTITY	SIZE	In foot pounds	In Nm
1.	Frame Hanger to Cross Member	4	M16	*	*
2.	QUIK-ALIGN TRI-FUNCTIONAL Bolt	2	⅞"	**550	**745
3.	Lift Air Spring to Frame Hanger	2	¾"	45 ± 5	60 ± 7
4.	Lift Air Spring to Axle Beam Assembly	4	⅜"-16 UNF	18 ± 2	24 ± 3
5.	Ride Air Spring to Axle Beam Assembly	2	½"-13 UNC	30 ± 5	41 ± 7
6	Upper Shock Absorber Locknut	2	¾"	188 ± 12	255 ± 16
7	Lower Shock Absorber Locknut	2	⅝"	170 ± 10	231 ± 14
8	S-cam U-bolt Nut	4	5⁄16"-18 UNC	25 ± 5	34 ± 7
9	S-cam Flange Nut	4	M8	25 ± 5	34 ± 7

NOTE: Torque values listed above apply only if Hendrickson supplied fasteners are used. If non Hendrickson fasteners are used, follow torque specifications listed in the vehicle manufacturer's service manual.

* Huck fasteners and frame mount hardware are not supplied by Hendrickson. Refer to the vehicle manufacturer for torque specifications.

** Torque to shear.

SECTION 11
Reference Material

This technical publication covers Hendrickson's recommended procedures for our parts / products. Other components play a major role in overall performance and Hendrickson recommends you follow the specific vehicle manufacturer's recommendation for care and maintenance. Some recommended procedures have been developed by The Technology & Maintenance Council (TMC) and Hendrickson supports these recommendations. We have compiled a list of these below.

TMC

To obtain copies of the following RP's, video's, or charts, contact TMC at:

TMC / ATA
2200 Mill Road
Alexandria, VA 22314

Phone: 703-838-1763
website: tmc.truckline.com
online ordering: www.truckline.com/store

IMPORTANT REFERENCES

TMC RP 214B	Tire / Wheel End Balance and Runout
TMC RP 216	Radial Tire Conditions Analysis Guide
TMC RP 219A	Radial Tire Wear Conditions and Causes
TMC RP 222A	User's Guide To Wheels and Rims
TMC RP 230	Tire Test Procedures for Tread wear, Serviceability, and Fuel Economy
TMC RP 514	Pre-Alignment Inspection
TMC RP 618	Wheel Bearing Adjustment Procedure
TMC RP 620B	Front End Alignment Steering Geometry
TMC RP 708A	Trailer Axle Alignment
TMC RP 642	Guidelines For Total Vehicle Alignment
TMC RP 644	Wheel End Conditions Analysis Guide
TMC RP 645	Tie Rod End Inspection and Maintenance Procedure

VIDEOS

TMC T0326	Wheel End Maintenance
TMC T0372	Tire Pre-Trip Inspection Guidelines

OTHER

TMC T0400	Wheel bearing Adjustment Procedure Wall Chart

Truck Commercial Vehicle Systems
800 South Frontage Road
Woodridge, IL 60517-4904 USA

1.866.755.5968 (Toll-free U.S. and Canada)
1.630.910.2800 (Outside U.S. and Canada)
Fax 1.630.910.2899

"HENDRICKSON", the "H" logo and other Hendrickson marks designated with the "®" symbol are registered trademarks of Hendrickson USA, L.L.C. in the United States and certain other countries.

Information contained in this literature was accurate at the time of publication. Product changes may have been made after the copyright date that are not reflected.
© 2018 Hendrickson USA, L.L.C. All Rights Reserved

17730-309 Rev A 11-18

Printed in United States of America