PARTS LIST

ULTIMAAX® Rear Suspension for Kenworth Vehicles

LIT NO: SP-301
DATE: October 2018 **REVISION:** B

CONTENTS

DESCRIPTION **PAGE**

Parts List

- 46K • 52K Capacity 2
- 60K • 70K Capacity 4

Special Tools 6

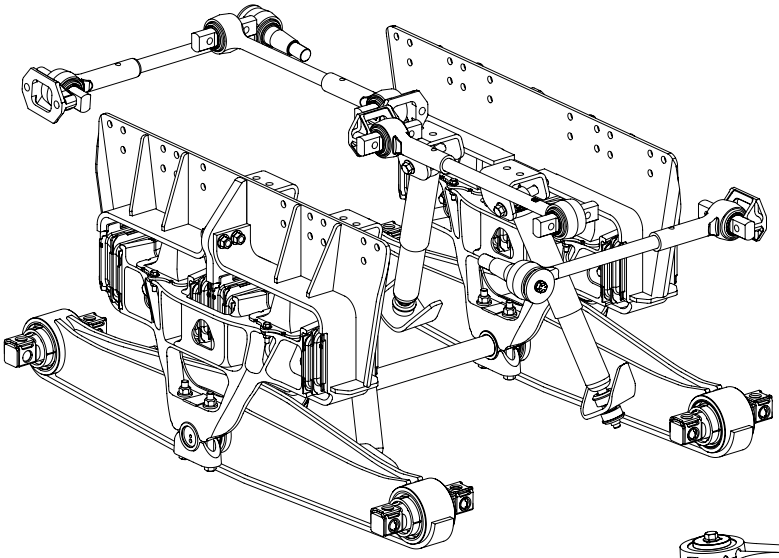

46K • 52K Capacity

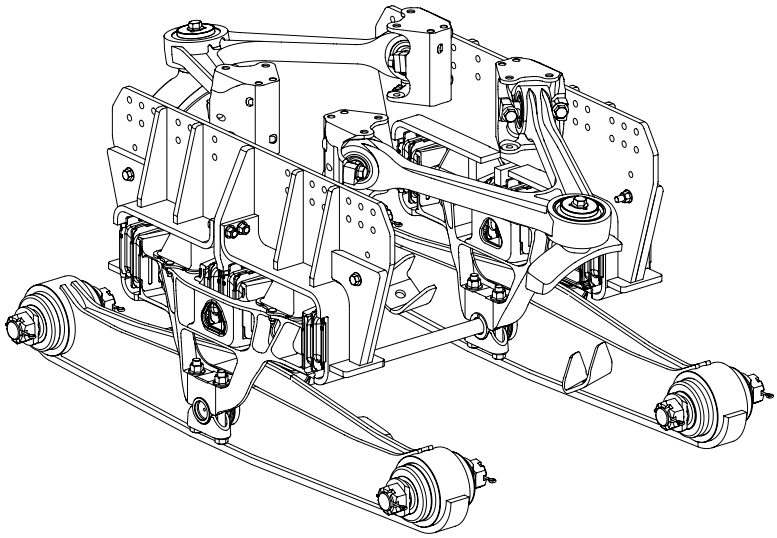

60K • 70K Capacity

HENDRICKSON
The World Rides On Us®

46K • 52K Capacity

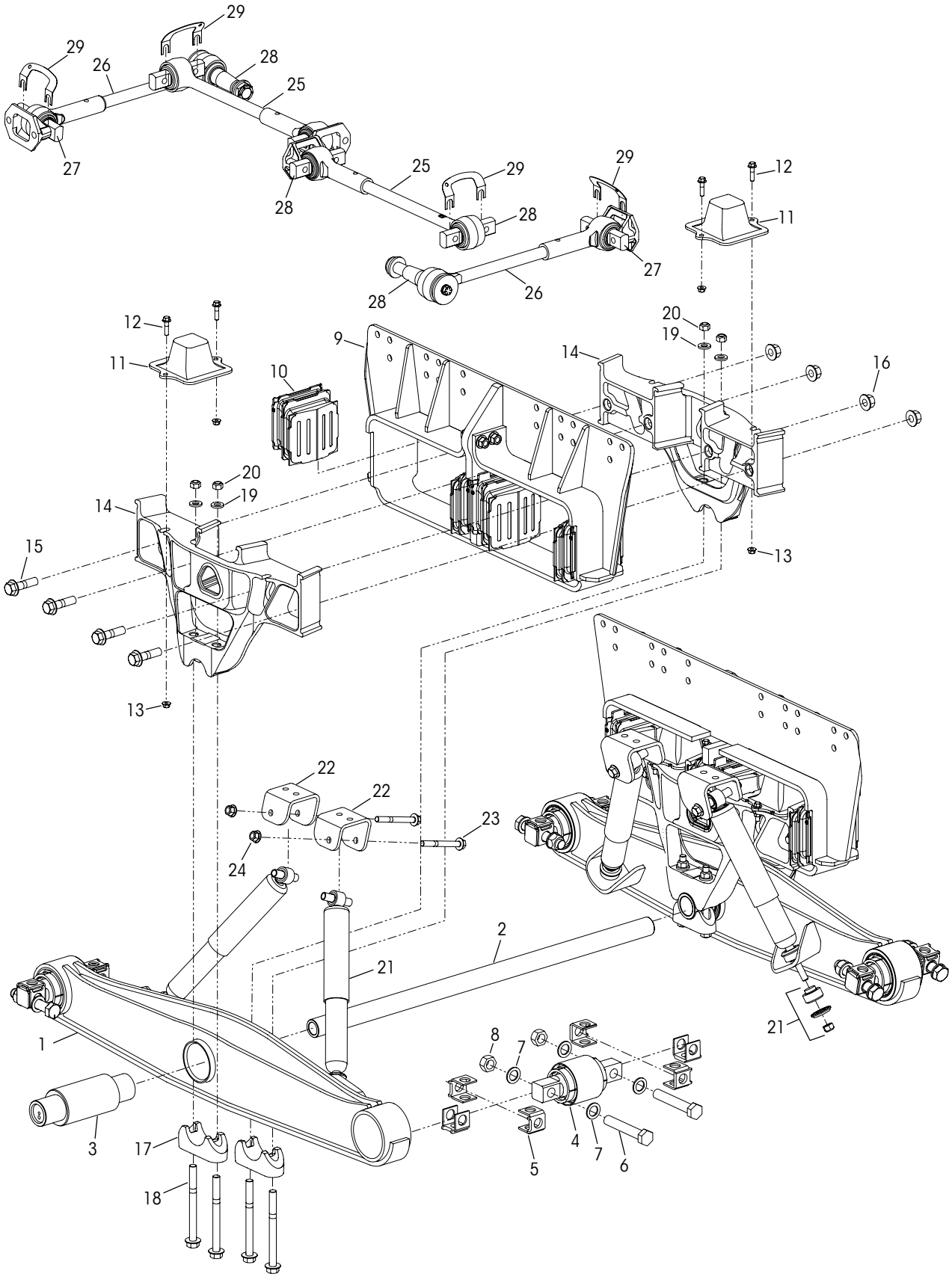

KEY NO.	PART NO.	DESCRIPTION	VEHICLE QTY.
1		Equalizing Beam Assembly with Shock Bracket Includes Key Nos. 3-5a	2
	78489-540	54" Beam Length	
	78489-560	56" Beam Length	
	60961-759	**Cross Tube Service Kit,** Includes Key No. 2 and Weldable Loose Plug (Not Shown)	
2	44642-008	Cross Tube - 1140 mm	1
	60961-755	**Equalizing Beam Bushings Service Kit, One Beam**, Includes Key No. 3-4, 6-8, 18-20	
3	69538-000L	Center Bushing	2
	60961-752	**End Bushing Service Kit, One Wheel End,** Includes Key Nos. 4-8	
4		*Bar Pin End Bushing Assembly, Includes Key No. 5a	
5		Bar Pin Shim	8
a	50130-000	0.19" / 0.19" Standard	
b	50131-000	0.25" / 0.12" Optional	
c	57026-000	0.375" Optional flat shim	
		End Bushing Fasteners Service Kit, Includes Key Nos. 6-8	
	56659-001	Tandem	
	56659-005	One Beam	
	34013-104	One Wheel End	
6		*1"-8 UNC x 6" Bolt	8
7		*1" Hardened Washer	16
8		*1"-8 UNC Locknut	8
9		Frame Hanger, 34" Width, 11" Ride Height	2
	70912-204	7" Axle Hanger Drop	
	70912-205	7¾" Axle Hanger Drop	
	60961-749	**Shear and Progressive Load Spring Service Kit, One Side,** Includes Key Nos. 10-13,15-16, 18-20, 30	
	60961-750	**Shear Spring Service Kit, One Side** Includes Key Nos. 10, 15-16, 18-20, 30	
10		*Shear Spring	8
	60961-751	**Progressive Load Spring Service Kit, One Side** Includes Key Nos. 11-13	
11		*Progressive Load Spring	4
	34013-196	**Progressive Load Spring Fasteners Service Kit, One Side,** Includes Key Nos. 12-13	
12		*M10 x 1.5 x 40 mm 6G Flange Bolt	8
13		*M10 x 1.5 Flange Lock Nut	8
14	70886-000	Saddle Assembly	4
	34013-197	**Saddle Only Fasteners Service Kit, One Side,** Includes Key Nos. 15-16	
15		*M20 x 1.5 x 75 mm Flange Bolt	8
16		*M20 x 1.5 Flange Nut	8
17	77205-001	Saddle Cap, *Replaces 77374-001*	4
	60961-768	**Saddle Cap Fasteners Service Kit, One Side,** Includes Key Nos. 18-20	
18		*M16 x 2 x 6G x 180 mm Flange Bolt	8
19		*M16 Flat Washer	8
20		*M16 x 2 x 6H Nut	8
21	60680-015L	Shock Absorber	4
22	78630-001	Upper Shock Bracket *Replaces 78630-002 (If equipped)*	2
	60961-818	**Upper Shock Fasteners Service Kit, One Beam,** Includes Key Nos. 23-24	
23		*M16 x 2 x 140 mm Flange Bolt	4
24		*M16 x 2 Flange Nut	4
25		ULTRA ROD® PLUS™ Longitudinal Torque Rod, Straddle/Straddle Includes Key No. 27	2
	92000-610S	Front	
	92000-660S	Rear	
26	92350-605S	**ULTRA ROD PLUS Transverse Torque Rod Straddle/Taper Includes Key Nos. 27-28	2
27	66649-002L	XTRB Straddle Bushing	6
28	66649-004L	XTRB Taper Bushing	2
29	49689-000L	Torque Rod Shim	As Req.
30	70867-001	P-80 Lubricant - 10 ml (Not Shown)	As Req.

NOTES: * Item included in kit/assembly only, part not sold separately.

** Transverse torque rods are mandatory for the ULTIMAAX rear suspension regardless of axle spacing.

Hendrickson Lit. No. 48422-592 – ULTIMAAX Gauge Card can be used to measure in unloaded condition (1) the height of the progressive load spring (PLS) and (2) the length of cut / split of the shear spring and PLS.

60K • 70K Capacity

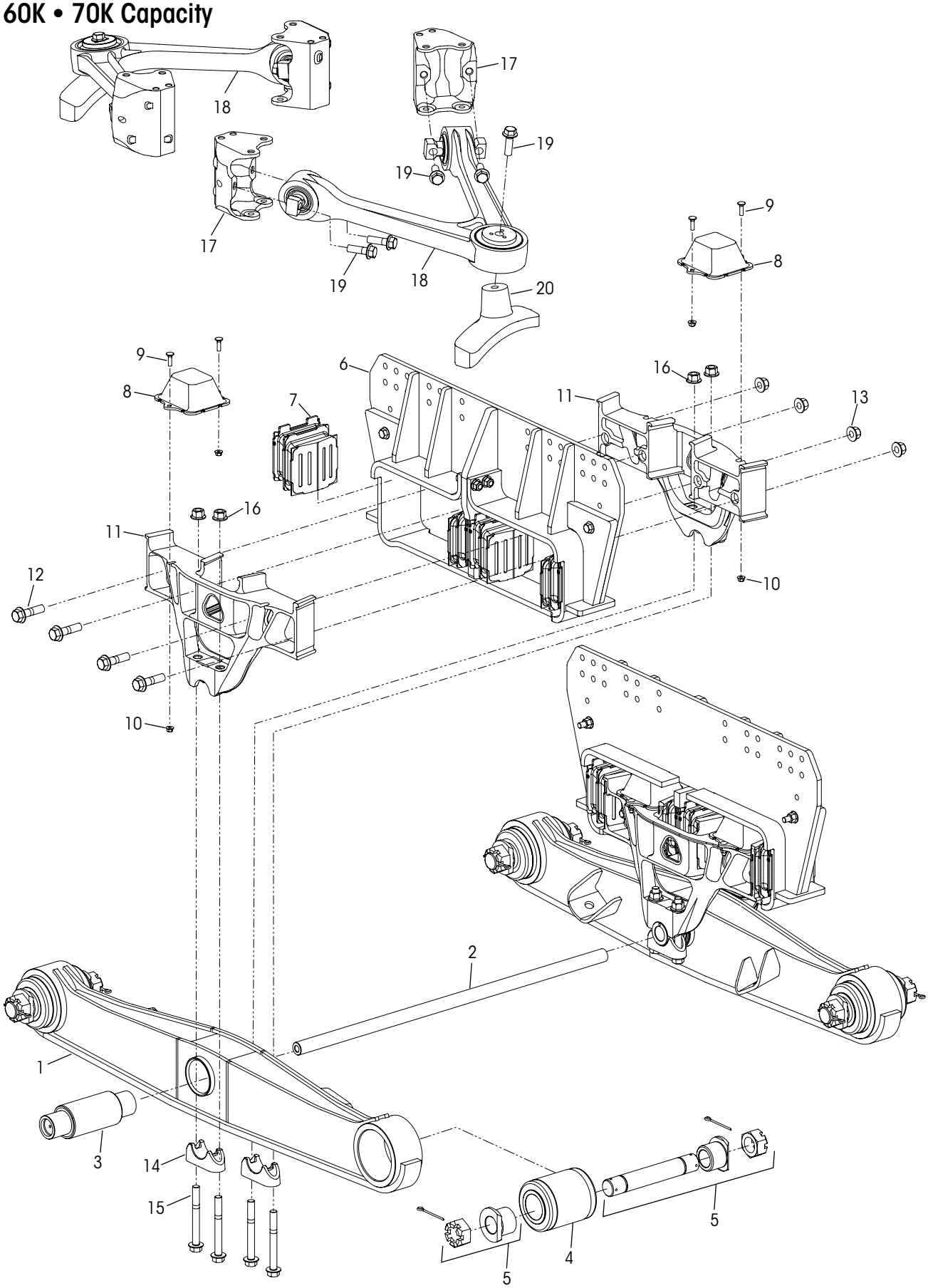

KEY NO.	PART NO.	DESCRIPTION	VEHICLE QTY.
1		Equalizing Beam Assembly, Includes Key Nos. 3-4	2
	78634-560	60K, 56" Beam Length	
	78634-600	60K, 60" Beam Length	
	80192-560	70K, 56" Beam Length, 6" Bushing	
	80291-560	70K, 56" Beam Length, 7" Bushing	
	80192-600	70K, 60" Beam Length, 6" Bushing	
	80291-600	70K, 60" Beam Length, 7" Bushing	
		Cross Tube Service Kit, Includes Weldable Loose End Plug (Not Shown)	
	60961-759	60K, Includes Key No. 2a	
	60961-875	70K, Includes Key No. 2b & Circlip (Not Shown)	
2		Cross Tube, 1140 mm	1
a	44642-008	60K	
b	78962-001	70K	
		Equalizing Beam Bushings Service Kit, One Beam	
	34013-290	60K, 6" Bushing, Includes Key No. 3a-5a, 15-16	
	34013-291	70K, 6" Bushing, Includes Key No. 3b, 4a-5a, 15-16	
	34013-292	70K, 7" Bushing, Includes Key No. 3b-5b, 15-16	
3		Center Bushing Assembly, includes End Plug	2
a	69538-000L	60K	
b	80539-001	70K, includes Circlip (Not Shown)	
		End Bushing and Adapter Service Kits,	
		• Tandem	
	60872-010	60K-70K, 6" Bushing, Includes Key No. 4a-5a	
	60872-011	70K, 7" Bushing, Includes Key No. 4b-5b	
		• One Wheel End	
	34013-052	60K-70K, 6" Bushing, Includes Key No. 4a-5a	
	34013-110	70K, 7" Bushing, Includes Key No. 4b-5b	
4		End Bushing	4
a	10363-000L	60K-70K, 6" Bushing	
b	10364-000L	70K, 7" Bushing	
5		End Bushing Adapter Assembly	4
a	21140-007	60K-70K, 6" Bushing	
b	21140-004L	70K, 7" Bushing	

KEY NO.	PART NO.	DESCRIPTION	VEHICLE QTY.
6		Frame Hanger	2
	80821-003	60K, 6" Bushing	
	80821-002	70K, 6" Bushing	
	80821-001	70K, 7" Bushing	
	60961-876	**Shear and Progressive Load Spring Service Kit, One Side,** Includes Key Nos. 7-8, 9-10, 12-13, 15-16, 21	
	60961-877	**Shear Spring Service Kit, One Side** Includes Key Nos. 7, 12-13, 15-16, 21	
7		*Shear Spring	8
	60961-878	**Progressive Load Spring Service Kit, One Side** Includes Key Nos. 8-10	
8		*Progressive Load Spring	4
	60961-812	**Progressive Load Spring Fasteners Service Kit, One Side,** Includes Key Nos. 9-10	
9		*M10 x 1.5 x 35 mm 6G Flange Bolt	8
10		*M10 x 1.5 Flange Locknut	8
11	80964-001	Saddle Assembly	4
	34013-197	**Saddle Only Fasteners Service Kit, One Side,** Includes Key Nos. 12-13	
12		*M20 x 1.5 x 75 mm Flange Bolt	8
13		*M20 x 1.5 Flange Nut	8
14	80965-001	Saddle Cap	4
	60961-879	**Saddle Cap Fasteners Service Kit, One Side,** Includes Key Nos. 15-16	
15		*M20 x 1.5 x 175 mm Flange Bolt	8
16		*M20 x 1.5 Flange Locknut	8
17	78561-001	Corner Bracket	4
18	76847-000	**V-rod Assembly	2
19	68754-065	M20 x 2.5 x 65 mm Flange Bolt	10
20		Axle Apex Bracket, *see Table below*	2
21	70867-001	P-80 Lubricant - 10 ml (Not Shown)	As Req.

NOTES: * Item included in kit / assembly only, part not sold separately.

** Transverse torque rods are mandatory for the ULTIMAAX rear suspension regardless of axle spacing.

Hendrickson Lit. No. 48422-598 – ULTIMAAX Gauge Card can be used to measure in unloaded condition (1) the height of the progressive load spring (PLS) and (2) the length of cut / split of the shear spring and PLS.

KEY NO. 20 AXLE APEX BRACKET

80784-XXX – RT70 Axle			80786-XXX – D70 Axle			80913-XXX – RT58 Axle			91005-XXX – D60 Axle		
Pinion Angle	Front Drive	Rear Drive	Pinion Angle	Front Drive	Rear Drive	Pinion Angle	Front Drive	Rear Drive	Pinion Angle	Front Drive	Rear Drive
0	80784-005	80784-105	0	80786-005	80786-105	0	80913-005	80913-105	0	91005-005	91005-105
1	80784-001	80784-101	1	80786-001	80786-101	1	80913-001	80913-101	1	91005-001	91005-101
2	80784-002	80784-102	2	80786-002	80786-102	2	80913-002	80913-102	2	91005-002	91005-102
2.5	80784-025	80784-125	2.5	80786-025	80786-125	2.5	80913-025	80913-125	2.5	91005-025	91005-125
3	80784-003	80784-103	3	80786-003	80786-103	3	80913-003	80913-103	3	91005-003	91005-103
4	80784-004	80784-104	4	80786-004	80786-104	4	80913-004	80913-104	4	91005-004	91005-104
						12.5		80913-106	11		91005-106
						11.75		80913-107	10.25		91005-107
						11		80913-108	9.5		91005-108
						10.5		80913-109	9		91005-109
						10.25		80913-110	8.75		91005-110
						9.5		80913-111	7.75		91005-111

■ Special Tools

SADDLE DISASSEMBLY TOOL

Hendrickson Part No. 66086-113L

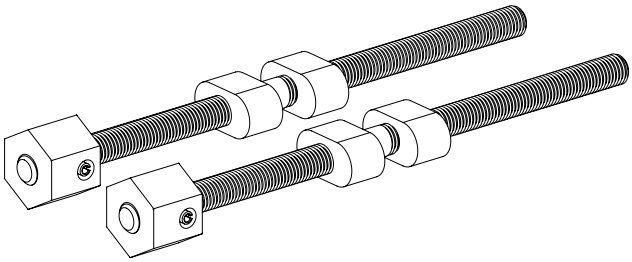

SADDLE ASSEMBLY TOOL

Hendrickson Part No. 66086-108L

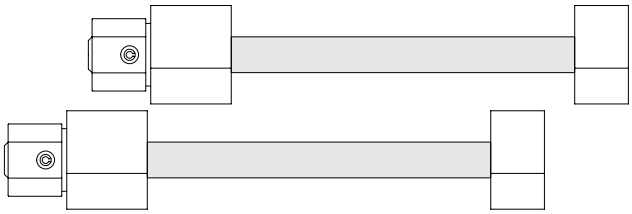

CENTER BUSHING TOOLS

RECEIVING TOOL

Hendrickson Part No. 66086-112

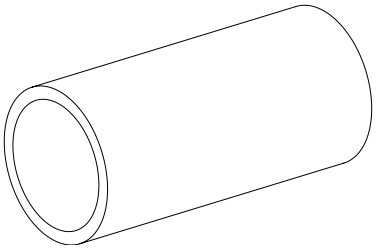

INSTALLATION TOOL

Hendrickson Part No. 66086-107

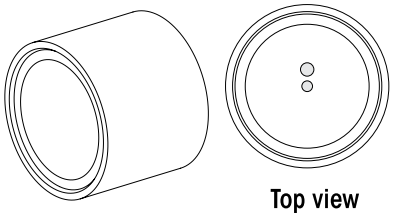

REMOVAL TOOL

Hendrickson Part No. 66086-110

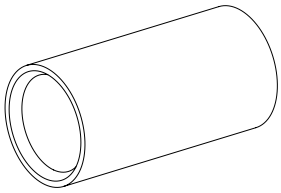

BAR PIN STYLE END BUSHING TOOLS – 46K • 52K CAPACITY

RECEIVING TOOL

Hendrickson Part No. 66086-111

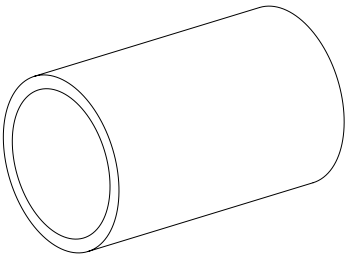

INSTALLATION TOOL

Hendrickson Part No. 66086-106

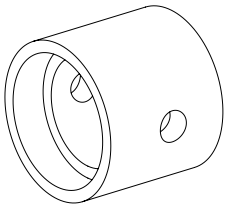

REMOVAL TOOL

Hendrickson Part No. 66086-109

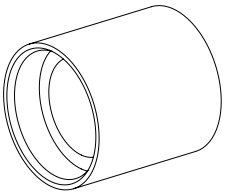

ADAPTER STYLE END BUSHING TOOLS – 60K • 70K CAPACITY

Hendrickson Part No. 66086-101

OTC Part No. 1763

Visit otctools.com

■ Special Tools

ULTRA ROD PLUS TORQUE ROD BUSHING FUNNEL TOOL

Hendrickson Part No. 66086-000L

This is a general parts list to provide directional information. Components may vary by model. Questions in regards to parts, contact Hendrickson Truck Parts at 1.866.755.5968 (Toll-free U.S. and Canada), 630.910.2800 (Outside U.S. and Canada) or e-mail: truckparts@hendrickson-intl.com.

www.hendrickson-intl.com

HENDRICKSON®

Truck Commercial Vehicle Systems
800 South Frontage Road
Woodridge, IL 60517-4904 USA

1.866.755.5968 (Toll-free U.S. and Canada)
1.630.910.2800 (Outside U.S. and Canada)
Fax 1.630.910.2899

"HENDRICKSON", the "H" logo and other Hendrickson marks designated with the "®" symbol are registered trademarks of Hendrickson USA, L.L.C. in the United States and certain other countries.

Information contained in this literature was accurate at the time of publication. Product changes may have been made after the copyright date that are not reflected.
© 2016 – 2018 Hendrickson USA, L.L.C. All Rights Reserved

SP-301 Rev B 10-18

Printed in United States of America