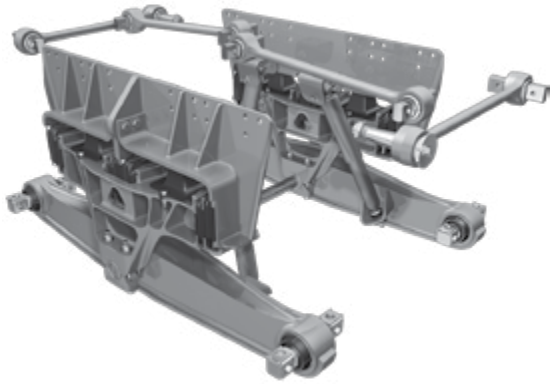

TECHNICAL PROCEDURE

ULTIMAAX® Rear Suspension for Fire and Rescue Vehicles

SUBJECT: Service Instructions
LIT NO: 17730-299
DATE: July 2018 **REVISION:** B

TABLE OF CONTENTS

Section 1 Introduction 2

Section 2 Product Description 2

Section 3 Important Safety Notice 4

Section 4 Special Tools 8

Section 5 Parts List 10

Section 6 Preventive Maintenance

Hendrickson Recommended Inspection Intervals 13

Component Inspection 13

Center Bushings 14

Equalizing Beam End Connection 15

Bar Pin End Bushings 18

Bar Pin Shims 18

Beam End Axle Brackets 19

Frame Hanger Assembly 20

Shear springs 20

Progressive Load Springs (PLS) 21

Saddle Connection 22

Cross Tube. 23

Torque Rods 24

Shock Absorbers 25

Section 7 Alignment & Adjustments

Drive Axle Pinion Angle 27

Drive Axle Alignment 27

Axle Lateral Alignment. 29

Bar Pin Alignment 29

Section 8 Component Replacement

Fasteners 32

Shock Absorber 32

Shear Spring / Frame Hanger Assembly / Saddle Assembly 33

Progressive Load Spring (PLS) 38

Equalizing Beam 38

Equalizing Beam Center Bushing. 41

Equalizing Beam End Bushings 44

Cross Tube. 50

Torque Rods 51

Torque Rod Bushings. 52

Section 9 Troubleshooting Guide 57

Section 10 Torque Specifications 58

HENDRICKSON
The World Rides On Us®

SECTION 1
Introduction

This publication is intended to acquaint and assist maintenance personnel in the preventive maintenance, service, and repair of the ULTIMAAX® Rear Rubber Suspension System for applicable Fire and Rescue Vehicles.

NOTE Use only Hendrickson Genuine parts for servicing this suspension system.

It is important to read and understand the entire Technical Procedure publication prior to performing any maintenance, service, or repair of this product. The information in this publication contains parts lists, safety information, product specifications, features, proper maintenance, service, and repair instructions for ULTIMAAX suspensions.

Hendrickson reserves the right to make changes and improvements to its products and publications at any time. Contact Hendrickson Tech Services for information on the latest version of this manual at 1-866-755-5968 (toll-free U.S. and Canada), 1-630-910-2800 (outside U.S. and Canada) or e-mail: techservices@hendrickson-intl.com.

The latest revision of this publication is available online at www.hendrickson-intl.com.

SECTION 2
Product Description

ULTIMAAX is an advanced severe-duty rear rubber suspension designed specifically for fire and rescue applications to balance outstanding durability, empty ride quality, loaded stability and mobility. Through its unique design, the system offers premium ride quality in both empty and loaded conditions, with increasing stability as the load increases.

- **Equalizing beam** — Formed and robotically welded to provide a narrow profile for weight savings. Distributes load equally between axles to improve maneuverability, stability and handling. Increases ground clearance with flat bottom design. Lowers the center of gravity to increase stability.
- **Saddle** — Triangular geometry provides structure and durability. Weight efficient design helps to increase payload, while offering a considerable weight savings versus competitive suspensions.
- **Frame hangers** — Optimized design to balance durability and weight savings. Fabricated to offer flexibility with multiple truck configurations.
- **Rubber shear springs** — Primary springs in unloaded condition, providing superb ride quality. React to longitudinal loads during braking and accelerating for minimal displacement.
- **Progressive load springs** — Designed to balance empty ride quality and loaded stability. Stiffness of progressive load spring increases as load increases, providing a unique balance of empty ride quality and loaded stability.
- **Longitudinal torque rods** — Engineered to optimize resistance to axle wind-up during acceleration and braking.
- **Transverse torque rods** — Heavy-duty transverse torque rods ensure maximum lateral axle control and straight line suspension stability.

FIGURE 2-1

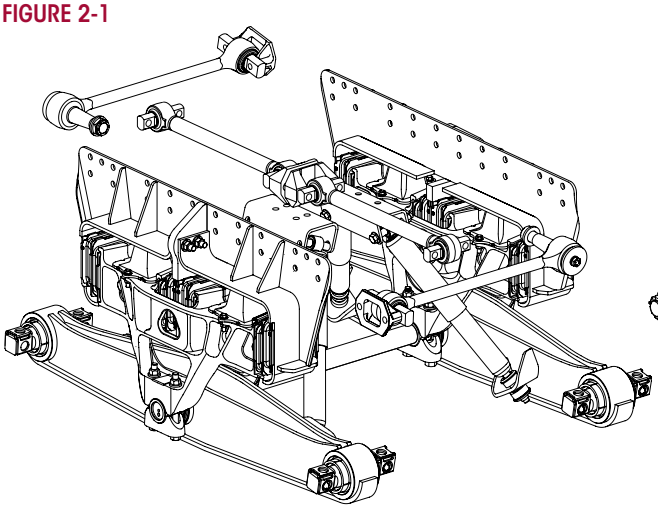

54K • 58K Capacity
9½" • 10" • 10¼" • 11½" Ride Height

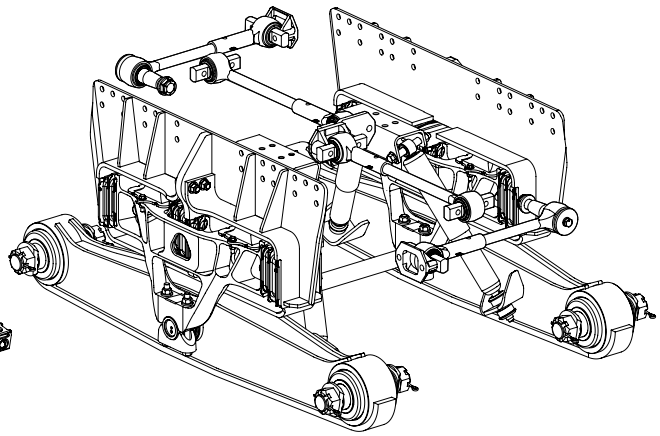

63K Capacity
10" • 10½" Ride Height

ULTIMAAX® SPECIFICATIONS

	54K	58K	63K
Suspension Rating	54,000 lbs (24,494 kg)	58,000 lbs (26,308 kg)	63,000 lbs (28,576 kg)
Diagonal Articulation[1]	17½" (445 mm)		
Ride Heights	9½"•10"•10¼"•11½" (241 mm, 254 mm, 260 mm, 292 mm)		10", 10½" (254 mm, 267 mm)
Axle Spacing[2]	54" (1,372 mm)		54", 56" (1,372 mm, 1,422, mm)

Hendrickson approves the use of ULTIMAAX in fire / rescue applications. All such applications must comply with applicable Hendrickson specifications and must also be approved by the respective vehicle manufacturer with the vehicle in its original, as-built configuration. Contact Hendrickson and the respective vehicle manufacturer for approval of additional applications.

1. Suspension articulation may exceed vehicle's capability and may be limited by vehicle manufacturer; vehicle manufacturer installed axle stops may restrict suspension's articulation.
2. Contact Hendrickson for availability of additional beam lengths.

For additional details regarding specifications, applications, capacities, operating service and maintenance instructions, refer to applicable Hendrickson technical literature (available at www.hendrickson-intl.com) or contact Hendrickson at 1-866-768-5968.

Actual product performance may vary depending upon vehicle configuration, operation, service and other factors.

U.S. and foreign patents granted and / or pending.

SECTION 3

Important Safety Notice

Proper maintenance, service and repair are important to the reliable operation of the suspension. The procedures recommended by Hendrickson and described in this technical publication are methods of performing such maintenance, service and repair.

This technical publication should be read carefully to help prevent personal injury and to assure that proper methods are used. Improper maintenance, service or repair may damage the vehicle, cause personal injury, render the vehicle unsafe in operation, or void the manufacturer's warranty.

Failure to follow the safety precautions in this manual can result in personal injury and/or property damage. Carefully read and understand all safety related information within this publication, on all decals and in all such materials provided by the vehicle manufacturer before conducting any maintenance, service or repair.

EXPLANATION OF SIGNAL WORDS

Hazard "Signal Words" (Danger • Warning • Caution) appear in various locations throughout this publication. Information accented by one of these signal words must be observed to help minimize the risk of personal injury to service personnel, or possibility of improper service methods which may damage the vehicle or render it unsafe.

This is the safety alert symbol. It is used to alert you to potential personal injury hazards. Obey all safety messages that follow this symbol to avoid possible injury or death.

Additional Notes or Service Hints are utilized to emphasize areas of procedural importance and provide suggestions for ease of repair. The following definitions indicate the use of these signal words as they appear throughout the publication.

DANGER INDICATES AN IMMINENTLY HAZARDOUS SITUATION, WHICH IF NOT AVOIDED, WILL RESULT IN SERIOUS INJURY OR DEATH.

WARNING INDICATES A POTENTIAL HAZARDOUS SITUATION WHICH, IF NOT AVOIDED, CAN RESULT IN SERIOUS INJURY OR DEATH.

CAUTION INDICATES A POTENTIAL HAZARDOUS SITUATION WHICH, IF NOT AVOIDED, MAY RESULT IN MINOR OR MODERATE INJURY.

NOTE An operating procedure, practice condition, etc. which, is essential to emphasize.

SERVICE HINT A helpful suggestion that will make the servicing being performed a little easier and/or faster.

Also note that particular service operations may require the use of special tools designed for specific purposes. These special tools can be found in the "Special Tools" Section of this publication.

The torque symbol alerts you to tighten the fasteners to a specific torque value. See Torque Specifications Section of this publication.

SAFETY PRECAUTIONS

WARNING

FASTENERS

DISCARD USED FASTENERS. ALWAYS USE NEW FASTENERS TO COMPLETE A REPAIR. FAILURE TO DO SO COULD RESULT IN FAILURE OF THE PART, OR MATING COMPONENTS, ADVERSE VEHICLE HANDLING, PERSONAL INJURY, OR PROPERTY DAMAGE.

LOOSE OR OVER TORQUED FASTENERS CAN CAUSE COMPONENT DAMAGE, ADVERSE VEHICLE HANDLING, PROPERTY DAMAGE, OR SEVERE PERSONAL INJURY. MAINTAIN CORRECT TORQUE VALUE AT ALL TIMES. CHECK TORQUE VALUES ON A REGULAR BASIS AS SPECIFIED, USING A REGULARLY CALIBRATED TORQUE WRENCH. TORQUE VALUES SPECIFIED IN THIS TECHNICAL PUBLICATION ARE FOR HENDRICKSON SUPPLIED FASTENERS ONLY. IF NON-HENDRICKSON FASTENERS ARE USED, FOLLOW TORQUE SPECIFICATION LISTED IN THE VEHICLE MANUFACTURER'S SERVICE MANUAL.

WARNING

TORCH/WELDING

DO NOT USE A CUTTING TORCH TO REMOVE ANY FASTENERS OR BUSHINGS. THE USE OF HEAT ON SUSPENSION COMPONENTS WILL ADVERSELY AFFECT THE STRENGTH OF THESE PARTS. A COMPONENT DAMAGED IN THIS MANNER CAN RESULT IN THE ADVERSE VEHICLE HANDLING AND POSSIBLE PERSONAL INJURY OR PROPERTY DAMAGE.

EXERCISE EXTREME CARE WHEN HANDLING OR PERFORMING MAINTENANCE IN THE AREA OF THE EQUALIZING BEAM. DO NOT CONNECT ARC WELDING GROUND LINE TO THE EQUALIZING BEAM. DO NOT STRIKE AN ARC WITH THE ELECTRODE ON THE EQUALIZING BEAM AND AXLE. DO NOT USE HEAT NEAR THE EQUALIZING BEAM ASSEMBLY. DO NOT NICK OR GOUGE THE EQUALIZING BEAM. SUCH IMPROPER ACTIONS CAN DAMAGE THE EQUALIZING BEAM ASSEMBLY AND CAUSE ADVERSE VEHICLE HANDLING AND POSSIBLE PERSONAL INJURY OR PROPERTY DAMAGE.

WARNING

LOAD CAPACITY

ADHERE TO THE PUBLISHED CAPACITY RATINGS FOR THE SUSPENSION. ADD-ON AXLE ATTACHMENTS AND OTHER LOAD TRANSFERRING DEVICES CAN INCREASE THE SUSPENSION LOAD ABOVE ITS RATED AND APPROVED CAPACITIES, WHICH CAN RESULT IN COMPONENT DAMAGE AND ADVERSE VEHICLE HANDLING, POSSIBLY CAUSING PERSONAL INJURY OR PROPERTY DAMAGE.

WARNING

MODIFYING COMPONENTS

DO NOT MODIFY OR REWORK PARTS WITHOUT AUTHORIZATION FROM HENDRICKSON. DO NOT USE SUBSTITUTE OR REPLACEMENT COMPONENTS NOT AUTHORIZED BY HENDRICKSON. USE OF MODIFIED, REWORKED, SUBSTITUTE OR REPLACEMENT PARTS NOT AUTHORIZED BY HENDRICKSON MAY NOT MEET HENDRICKSON'S SPECIFICATIONS, AND CAN RESULT IN FAILURE OF THE PART, ADVERSE VEHICLE HANDLING, AND POSSIBLE PERSONAL INJURY OR PROPERTY DAMAGE AND WILL VOID WARRANTY. USE ONLY HENDRICKSON AUTHORIZED REPLACEMENT PARTS.

WARNING

PERSONAL PROTECTIVE EQUIPMENT

ALWAYS WEAR PROPER EYE PROTECTION AND OTHER REQUIRED PERSONAL PROTECTIVE EQUIPMENT TO HELP PREVENT PERSONAL INJURY WHEN PERFORMING VEHICLE MAINTENANCE, REPAIR OR SERVICE.

CAUTION

PROCEDURES AND TOOLS

A TECHNICIAN USING A SERVICE PROCEDURE OR TOOL WHICH HAS NOT BEEN RECOMMENDED BY HENDRICKSON MUST FIRST SATISFY HIMSELF THAT NEITHER HIS SAFETY NOR THE VEHICLE'S SAFETY WILL BE JEOPARDIZED BY THE METHOD OR TOOL SELECTED. INDIVIDUALS DEVIATING IN ANY MANNER FROM THE INSTRUCTIONS PROVIDED WILL ASSUME ALL RISKS OF CONSEQUENTIAL PERSONAL INJURY OR DAMAGE TO EQUIPMENT INVOLVED.

WARNING

SUPPORT THE VEHICLE PRIOR TO SERVICING

PLACE THE VEHICLE ON A LEVEL FLOOR AND CHOCK THE WHEELS TO PREVENT THE VEHICLE FROM MOVING OR ROLLING. DO NOT WORK AROUND OR UNDER A RAISED VEHICLE SUPPORTED BY ONLY A FLOOR JACK OR OTHER LIFTING DEVICE. ALWAYS SUPPORT A RAISED VEHICLE WITH RIGID SAFETY STANDS. FAILURE TO DO SO CAN CAUSE SERIOUS PERSONAL INJURY OR DAMAGE TO EQUIPMENT.

WARNING

IMPROPER JACKING METHOD

IMPROPER JACKING METHODS CAN CAUSE STRUCTURAL DAMAGE WHICH CAN CAUSE ADVERSE VEHICLE HANDLING, PROPERTY DAMAGE OR SEVERE PERSONAL INJURY AND WILL VOID HENDRICKSON'S WARRANTY.

- DO NOT USE THE SUSPENSION CROSS TUBE AS A JACKING POINT, SEE FIGURE 3-1, REFER TO VEHICLE MANUFACTURER FOR PROPER JACKING INSTRUCTIONS.
- ACCEPTABLE LIFTING POINTS FOR A VEHICLE AT THE RATED LOAD INCLUDE BUT ARE NOT LIMITED TO: THE AXLE, EQUALIZING BEAM, AND THE VEHICLE FRAME RAIL. REFER TO THE VEHICLE MANUFACTURER FOR PROPER JACKING INSTRUCTIONS.

FIGURE 3-1

ULTIMAAX 63K Shown

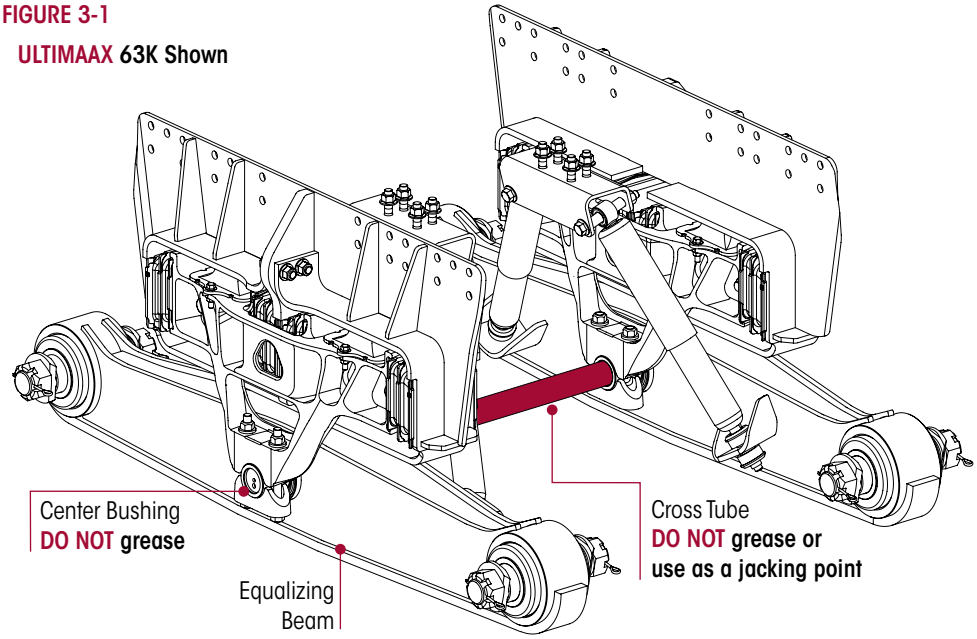

CAUTION

SADDLE CONNECTION

A SADDLE ASSEMBLY IS ATTACHED TO THE CENTER BUSHING OF EACH EQUALIZING BEAM WITH TWO (2) SADDLE CAPS. EACH SADDLE CAP USES TWO (2) BOLTS TO CLAMP THE CENTER BUSHING INNER METAL TO THE SADDLE. EACH SADDLE CAP MUST BE INSTALLED SO THAT THERE IS AN EVEN GAP BETWEEN THE SADDLE CAP AND THE BASE OF THE SADDLE LEGS AS SHOWN IN FIGURE 3-2. IF EACH SADDLE CAP IS NOT INSTALLED EVENLY, THE SADDLE LEGS COULD BECOME DEFORMED, RESULTING IN BENT BOLTS OR DAMAGED SADDLES.

FIGURE 3-2

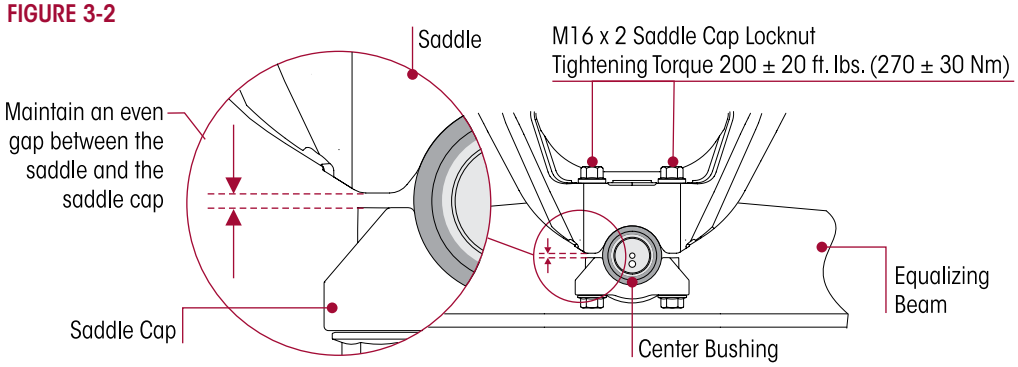

WARNING

TORQUE ROD ASSEMBLY

THE ULTIMAAX SUSPENSION INCORPORATES LONGITUDINAL AND TRANSVERSE TORQUE RODS FOR VEHICLE STABILITY. IF THESE COMPONENTS ARE DISCONNECTED OR ARE NON-FUNCTIONAL THE VEHICLE SHOULD NOT BE OPERATED. FAILURE TO DO SO CAN RESULT IN ADVERSE VEHICLE HANDLING AND POSSIBLE TIRE CONTACT WITH THE FRAME OR THE SUSPENSION.

WARNING

PARTS CLEANING

SOLVENT CLEANERS CAN BE FLAMMABLE, POISONOUS, AND CAUSE BURNS. TO HELP AVOID SERIOUS PERSONAL INJURY, CAREFULLY FOLLOW THE MANUFACTURER'S PRODUCT INSTRUCTIONS AND GUIDELINES AND THE FOLLOWING PROCEDURES:

1. WEAR PROPER EYE PROTECTION.
2. WEAR CLOTHING THAT PROTECTS YOUR SKIN.
3. WORK IN A WELL-VENTILATED AREA.
4. DO NOT USE GASOLINE OR SOLVENTS THAT CONTAIN GASOLINE. GASOLINE CAN EXPLODE.
5. HOT SOLUTION TANKS OR ALKALINE SOLUTIONS MUST BE USED CORRECTLY. FOLLOW THE MANUFACTURER'S RECOMMENDED INSTRUCTIONS AND GUIDELINES CAREFULLY TO HELP PREVENT PERSONAL ACCIDENT OR INJURY.

DO NOT USE HOT SOLUTION TANKS OR WATER AND ALKALINE SOLUTIONS TO CLEAN GROUND OR POLISHED PARTS. DOING SO WILL CAUSE DAMAGE TO THE PARTS AND VOID WARRANTY.

SECTION 4
Special Tools

SADDLE TOOLS

DISASSEMBLY TOOL

Hendrickson Part No. 66086-113L

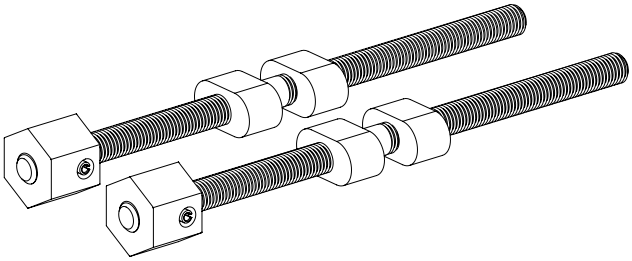

ASSEMBLY TOOL

Hendrickson Part No. 66086-108L

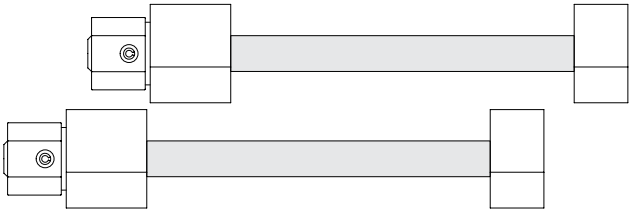

CENTER BUSHING TOOLS

RECEIVING TOOL

Hendrickson Part No. 66086-112

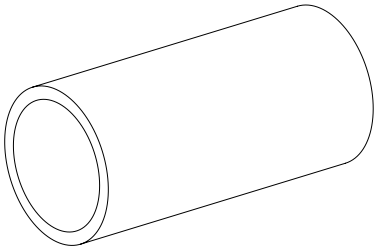

INSTALLATION TOOL

Hendrickson Part No. 66086-107

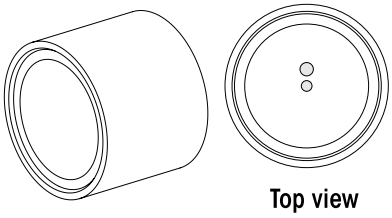

REMOVAL TOOL

Hendrickson Part No. 66086-110

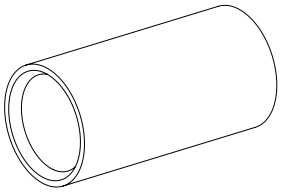

BAR PIN STYLE END BUSHING TOOLS – 54K • 58K

RECEIVING TOOL

Hendrickson Part No. 66086-111

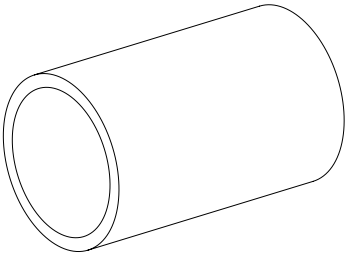

INSTALLATION TOOL

Hendrickson Part No. 66086-106

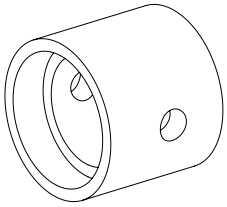

REMOVAL TOOL

Hendrickson Part No. 66086-109

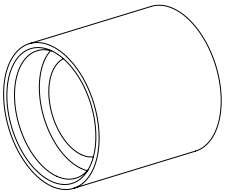

ADAPTER STYLE END BUSHING TOOLS – 63K

End Bushing
Removal / Replacement Adapter
OTC Part Number 208350

Center Bushing
Removal / Replacement Adapter
OTC Part Number 28541
Not Needed for this publication

Clamp
OTC Part Number 208349

Hendrickson Part No. 66086-101

OTC Part No. 1763

Visit otctools.com

TORQUE ROD BUSHING TOOLS

These shop made tools are made from cold rolled steel or equivalent. The drawings are for reference only, Hendrickson does not supply these tools.

RECEIVING TOOL

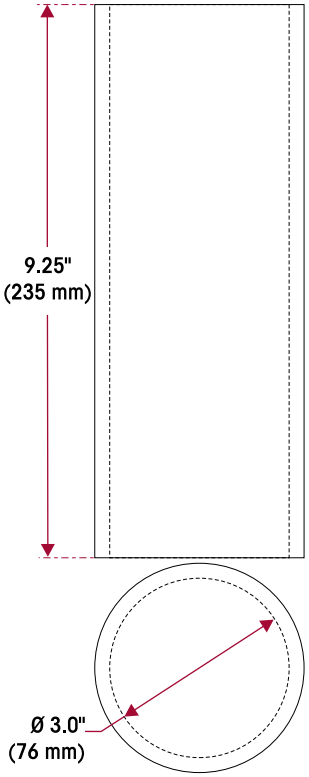

INSTALLATION / REMOVAL TOOL

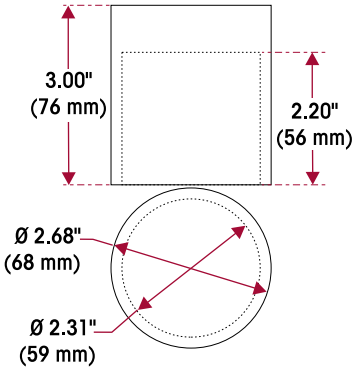

ULTRA ROD PLUS FUNNEL TOOL

Hendrickson Part No. 66086-000L

SECTION 5
Parts List

- **54K – Rosenbauer** 9½" Ride Height • **KME** 10" Ride Height
- **58K – Seagrave** 9½", 10¼" and 11½" Ride Height
- **63K – Rosenbauer** 10½" Ride Height, **KME** 10" Ride Height

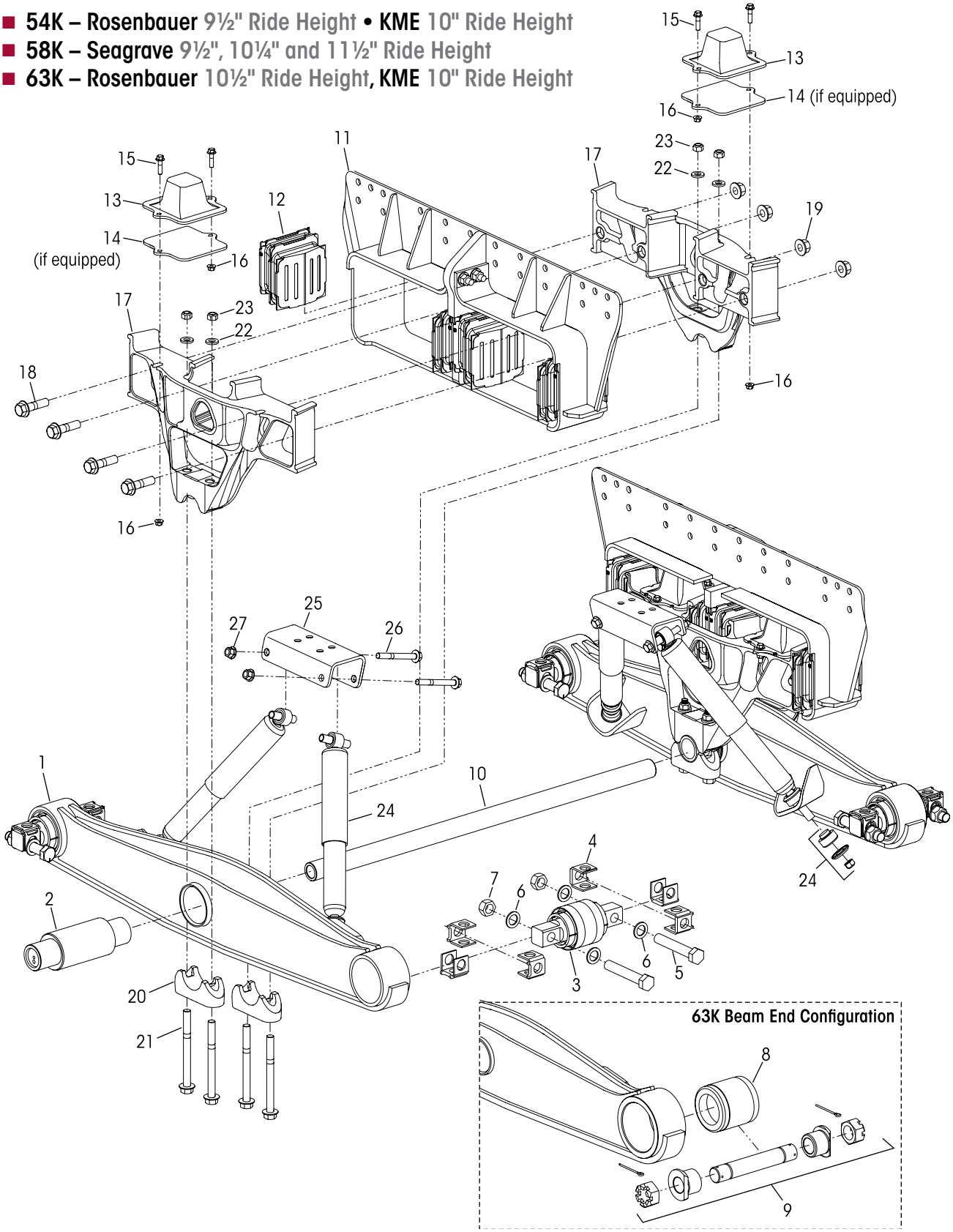

KEY NO.	PART NO.	DESCRIPTION	VEHICLE QTY.
1		Equalizing Beam Assembly with Shock Bracket	2
	78489-540	54K - Rosenbauer, KME; 58K - Seagrave, Includes Key Nos. 2-3	
	78634-540	63K - KME, Includes Key Nos. 2, 8	
	78634-560	63K - Rosenbauer, Includes Key Nos. 2, 8	
		Equalizing Beam Bushing Service Kits	
		• 54K / 58K Bar Pin Style	
	60961-755	**Center and End Bushing, One Beam,** Includes Key No. 2-3,5-7, 21-23	
	60961-752	**End Bushing, One Wheel End,** Includes Key Nos. 3-7	
		End Bushing Fasteners, Includes Key Nos. 5-7	
	56659-001	Tandem	
	56659-005	One Beam	
	34013-104	One Wheel End	
		• 63K Through Bolt Style	
	34013-052	**End Bushing and Adapter Service Kit, One Wheel End,** Includes Key Nos. 8-9	
2		Center Bushing	2
3		*Bar Pin End Bushing Assembly, 54K/58K, Includes Key No. 4a	
4		Bar Pin Shim	8
a	50130-000	0.19" / 0.19" Standard	
b	50131-000	0.25" / 0.12" Optional	
c	57026-000	0.375" Optional flat shim	
5		*1"-8 UNC x 6" Bolt	8
6		*1" Hardened Washer	16
7		*1"-8 UNC Locknut	8
8		*End Bushing, 63K	4
9	21140-007	End Bushing Adapter Assembly, 63K	4
	60961-759	**Cross Tube Service Kit,** Includes Key No. 10 and Weldable Loose Plug (Not Shown)	
10	44642-008	Cross Tube - 1140 mm	1
11		Frame Hanger	2
		• 34" Width - 54K/63K KME	
	78726-001	10" Ride Height	
		• 34⅛" Width - 58K Seagrave	
	78592-002	9½" and 10¼" Ride Height	
	78592-005	11½" Ride Height	
		• 35" Width - Rosenbauer	
	70912-005	10½" Ride Height, 63K	
	70912-206	9½" Ride Height, 54K	

KEY NO.	PART NO.	DESCRIPTION	VEHICLE QTY.
	60961-749	**Shear and Progressive Load Spring Service Kit, One Side,** Includes Key Nos. 12-13,15-16, 18-19, 21-23, 28	
	60961-750	**Shear Spring Service Kit, One Side** Includes Key Nos. 12, 18-19, 21-23, 28	
12		*Shear Spring	8
	60961-751	**Progressive Load Spring Service Kit, One Side** Includes Key Nos. 13, 15-16	
13		*Progressive Load Spring	4
14	70824-001	Spacer, 63K only	4
	34013-196	**Progressive Load Spring Fasteners Service Kit, One Side,** Includes Key Nos. 15-16	
15		*M10 x 1.5 x 40 mm 6G Flange Bolt	8
16		*M10 x 1.5 Flange Lock Nut	8
17	70886-000	Saddle	4
	34013-197	**Saddle Only Fastener Kit, One Side,** Includes Key Nos. 18-19	
18		*M20 x 1.5 x 75 mm Flange Bolt	8
19		*M20 x 1.5 Flange Nut	8
20	77205-001	Saddle Cap	4
	60961-768	**Saddle Cap Fastener Service Kit, One Side,** Includes Key Nos. 21-23	
21		*M16 x 2 x 6G x 180 mm Flange Bolt	8
22		*M16 Flat Washer	8
23		*M16 x 2 x 6H Nut	8
24		Shock Absorber	4
	60680-015L	9½" Ride Height - 54K Rosenbauer, 58K Seagrave	
	60680-016L	10¼", 11½" Ride Height - 58K Seagrave	
		10" Ride Height - 54K and 63K KME	
		10½" Ride Height - 63K Rosenbauer	
25		Upper Shock Bracket	2
	77591-002	54K/63K Rosenbauer	
	77591-006	54K/63K KME	
	77591-007	58K Seagrave	
	60961-818	**Upper Shock Fasteners Service Kit, One Beam,** Includes Key Nos. 26-27	
26		*M16 x 2 x 140 mm Flange Bolt	4
27		*M16 x 2 Flange Nut	4
28	70867-001	P-80 Lubricant - 10 ml (Not Shown)	As Req.

NOTES: * Item included in service kit/assembly only, part not sold separately.

** Transverse torque rods are mandatory for the ULTIMAAX rear suspension regardless of axle spacing.

Hendrickson Lit. No. 48422-592 – ULTIMAAX Gauge Card can be used to measure in unloaded condition (1) the length of cut / split, (2) depth of separation and (3) the height of the progressive load spring (PLS).

Torque Rod Configuration

54K / 63K – Rosenbauer
9.5" and 10½" Ride Height
54K / 63K – KME 10" Ride Height

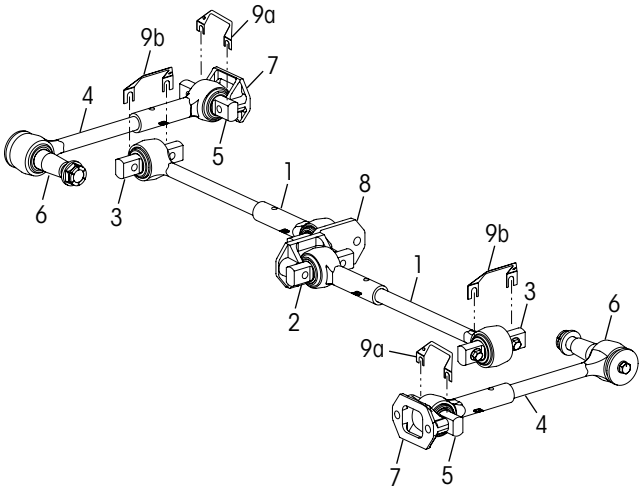

KEY NO.	PART NO.	DESCRIPTION	VEHICLE QTY.
1		Two-piece Longitudinal Torque Rod Straddle/Straddle	2
	65781-005	Rosenbauer, Includes Key Nos. 2a, 3	2
	65781-006	KME, Includes Key Nos. 2b, 3	2
2		XTRB Straddle Bushing to Cross Member Bracket	2
a	66649-005L	Rosenbauer	
b	66649-002L	KME	
3	66649-003L	XTRB Straddle Bushing to Axle Bracket,	2
4	65781-002	*Two-piece Transverse Torque Rod, Straddle/Tapper, Includes Key Nos. 5-6	2
5	66649-002L	XTRB Straddle Bushing	6
6	66649-004	XTRB Taper Bushing	2
7	22186-000	Torque Rod Frame Bracket	2
8		Torque Rod Cross Member Bracket	2
a	30828-000	Rosenbauer	
b	22186-000	KME	
9		Torque Rod Shim	As Req.
a	49689-000	111 mm	
b	67779-002	133 mm	

58K – Seagrave
9½", 10¼" and 11½" Ride Height

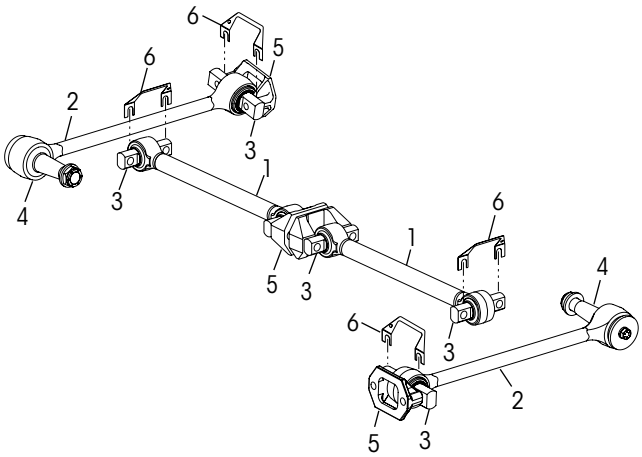

KEY NO.	PART NO.	DESCRIPTION	VEHICLE QTY.
1		ULTRA ROD® PLUS™ Longitudinal Torque Rod, Straddle/Straddle, Includes Key No. 3	
	72100-495	Front, Seagrave	1
	72100-635	Rear, Seagrave	1
2	72950-610	*ULTRA ROD PLUS Transverse Torque Rod, Straddle/Taper, Includes Key Nos. 3-4	2
3	64400-003	ULTRA ROD PLUS Straddle Bushing	6
4	64400-004	ULTRA ROD PLUS Taper Bushing	2
5	46015-000	Torque Rod Frame Bracket	4
6	67779-002	Torque Rod Shim - 133 mm	As Req.

NOTES: * Transverse torque rods are mandatory for the ULTIMAAX rear suspension regardless of axle spacing.

SECTION 6
Preventive Maintenance

Following appropriate inspection procedures is important to help ensure the proper maintenance and operation of the suspension system and component parts. Hendrickson recommends the ULTIMAAX rear suspension be inspected at pre-delivery, the first in-service inspection and regular preventive maintenance intervals. Off-highway and severe service operating conditions may require more frequent inspections than on-highway or less severe service operations. Inspection must include the following items and other components referenced in this section.

NOTE Torque values shown in this publication apply only if Hendrickson supplied fasteners are used. If non-Hendrickson fasteners are used, follow the torque specification listed in the vehicle manufacturer's service manual.

HENDRICKSON RECOMMENDED INSPECTION INTERVALS	PRE-DELIVERY INSPECTION	FIRST IN-SERVICE INSPECTION	PREVENTIVE MAINTENANCE
Inspect Progressive Load Spring	Within the first 500 Miles (500 km)	Within the first 1,500 Miles (2,000 km) or 100 Hours	Every 3 Months / 600 Hours
Inspect torque rods and equalizing beam end connections			Every 6 Months / 1200 Hours or 25,000 Miles / 40,000 Km
Visually Inspect proper assembly and function. Check for all of the following and replace components as necessary: • Signs of unusual movement, loose or missing components • Signs of abrasive or adverse contact with other components (example: brake lines, wheel wells, frame hangers, etc.) • Damaged, or cracked parts • Proper suspension function, alignment			
Inspect fasteners for proper torque as recommended in the Torque Specification Section of this publication with special attention to the following suspension connections: • Equalizing beam end connection • Saddle cap connection • Frame hanger to frame rail connection • Center Bushing			Every 12 Months / 2400 Hours
Verify the alignment of axles are within the vehicle manufacturer's tolerances.			

COMPONENT INSPECTION

Following appropriate inspection procedures is important to help ensure the proper maintenance and operation of the ULTIMAAX heavy-duty rear suspension system and component parts. Look for and replace worn, damaged, bent or cracked parts.

- **Cross tube —** Clean the cross tube and inspect it for cracks or excessive wear 8" to 10" from each end where it enters into the equalizing beam center bushings. Use a straight edge to check the straightness of the cross tube. If there is a doubt as to fracture, wear or straightness, replacement is necessary.

- **Equalizing beam assembly** — Check the overall condition of the equalizing beam for dents, dings, or other damage. Check the beam end connections for tearing or extreme bulging. Check for any metal-to-metal contact in the bushed joints. Refer to Equalizing Beam End Connection Inspection in this section.
- **Fasteners** — Look for any loose, missing or damaged fasteners on the entire suspension. Ensure all fasteners are tightened to a torque value within the specified torque range. See recommended torque specifications for Hendrickson supplied fasteners in Torque Specification Section of this publication. For fasteners not supplied by Hendrickson, see vehicle manufacturer. Use a calibrated torque wrench to check torque in the tightening direction. As soon as the fastener starts to move, record the torque. Correct the torque as necessary.

NOTE Hendrickson recommends the use of Grade 8 bolts, hardened washers, and Grade C locknuts. Hardened washers are not necessary when flange head fasteners are used.

NOTE Torque values shown in this publication apply only if Hendrickson supplied fasteners are used. If non-Hendrickson fasteners are used, follow the torque specification listed in the vehicle manufacturer's service manual.

- **Saddle cap fasteners —** Inspect the locknuts for proper torque to prevent wear of the beam center bushing into the saddle. See Torque Specification Section of this publication for recommended torque requirements.
- **Shock absorbers —** Look for any signs of dents or leakage. Misting is not considered a leak. See Shock Absorber Inspection in this section.
- **Transverse torque rods / Longitudinal torque rods** — The torque rods must be connected and in good working condition when operating the vehicle.
- **Wear and damage** — Inspect all parts of the suspension for wear and damage. Look for bent or cracked parts.

See vehicle manufacturer's applicable publications for other preventive maintenance requirements.

CENTER BUSHINGS

VISUAL INSPECTION

An inspection of the center bushing is necessary **when a vehicle is in the shop for major repair work** and at regular preventive maintenance intervals.

NOTE ULTIMAAX center bushing is designed with voids at front and rear, see Figure 6-1. These voids are not an indication of wear.

1. Visually inspect the center bushing for signs of movement or excessive wear such as frayed, bulging or distorted rubber in the center bushing.
2. Replacement is necessary if:
   - Any metal to metal contact is visible.
   - Any signs that the bushing inner metal is not centered in the bushing.
   - Any equalizing beam to saddle contact.

FIGURE 6-1

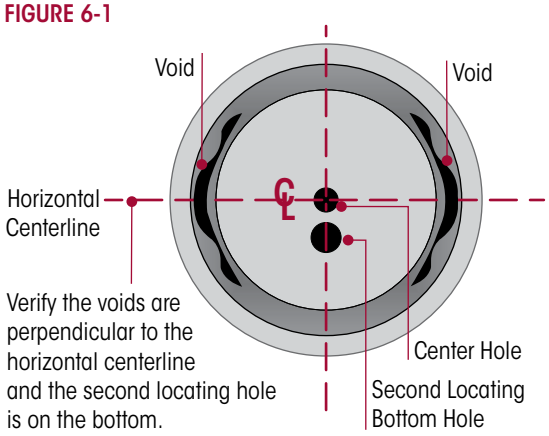

EQUALIZING BEAM END CONNECTION

An inspection of the beam end connections are necessary **when a vehicle is in the shop for major repair work** and at regular preventive maintenance intervals. Periodic visual inspection by the driver and service personnel is also recommended.

FIGURE 6-2

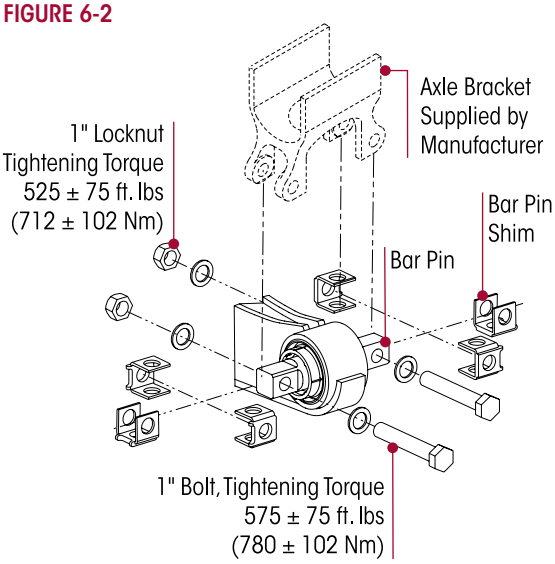

■ Bar Pin Style, see Figure 6-2

NOTE

The equalizing beam end connection requires that the fasteners are tightened to torque specifications, see Figure 6-2, to maintain the clamp load of the axle bracket legs to the bar pin. All bushing motion is accommodated by rubber deflection.

VISUAL INSPECTION

1. Chock the wheels.
2. Visually inspect suspension components for signs of movement or excessive wear.
   - Inspect alignment shims in equalizing beam end for looseness. Lightly tap on the alignment shims to see if they can be moved. If movement is detected, tighten fasteners to the proper torque value, see Figure 6-2.
   - Inspect the equalizing beam end connection for signs of excessive wear or looseness.

SERVICE HINT

An equalizing beam end connection that is visibly cleaner than the other connections may indicate a loose connection.

- Look for worn, frayed or distorted rubber in the bar pin beam end bushing, see Figure 6-3.
- Look for the equalizing beam to be lower in the beam hanger, see Figure 6-3.
- If the bar pin beam end bushing is visually offset a floor jack test should be performed, refer to Jack Test in this section.

FIGURE 6-3

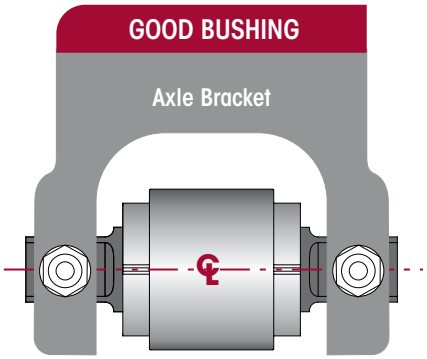

A **GOOD** bushing will result in the equalizing beam end hub appearing to be **centered** with the centerline of the end bushing in the axle bracket

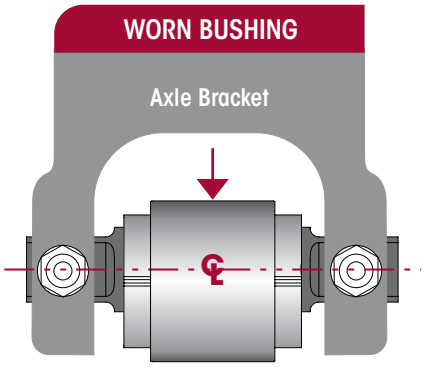

A **WORN** bushing will result in the equalizing beam end hub appearing to be 5/8" (15 mm) **offset/below** the centerline of the end bushing in the axle bracket

FIGURE 6-4

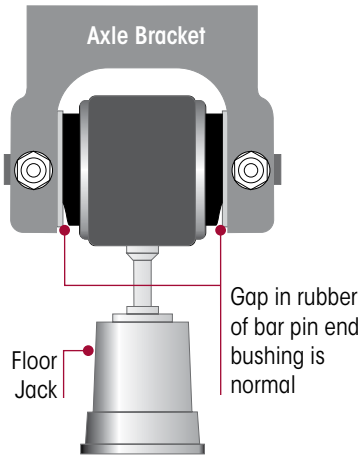

JACK TEST

1. Place a jack under each beam end as shown. Raise the jack to check for movement in the connection or rubber components, see Figure 6-4.

NOTE The gap at each side of the visible rubber on the lower part of the end bushing is normal, see Figure 6-4, and is not an indication to replace the bushing. Because all rubber end bushings are in compression, with the load bearing on the top side, the lower side of the rubber is slightly relieved, allowing the rubber to move inward, and a gap appears.

PHYSICAL INSPECTION

WARNING IF BAR PIN MOVEMENT OR LOOSENESS IS NOTED IN ANY OF THE EQUALIZING BEAM END HUBS, DO NOT OPERATE THE VEHICLE. REPLACE THE RUBBER END BUSHINGS AND ALL CONNECTING PARTS IF NECESSARY. THE ABOVE CONDITION CAN RESULT IN COSTLY REPAIR, DOWNTIME, POSSIBLE SEPARATION OF COMPONENTS, ADVERSE VEHICLE HANDLING, PROPERTY DAMAGE, OR PERSONAL INJURY.

SERVICE HINT An equalizing beam end connection that is visibly cleaner than the other connections may indicate a loose connection.

2. If bar pin end bushing movement or looseness is detected in the equalizing beam end hub, replace the end bushings and all connecting parts. Refer to the Component Replacement Section of this publication.
3. Check and record torque values, as received, for each 1" bar pin fastener, see Figure 6-2. Ensure all fasteners are tightened to:
   - At the **locknut** to 525 ± 75 foot pounds torque, or
   - At the **bolt head** to 575 ± 75 foot pounds
4. Recheck equalizing beam end connections for signs of looseness.
   - Inspect alignment shims in equalizing beam end for looseness. Lightly tap on the alignment shims to see if they can be moved. If movement is detected, tighten fasteners to the proper torque value, see Figure 6-2.
   - Inspect equalizing beam end connection for signs of excessive wear or looseness.
5. If bar pin looseness is still detected in any of the equalizing beam end hub, **DO NOT** operate the vehicle. One or more components will require replacement, see Component Replacement Section of this publication.

■ Adapter Style, see Figure 6-5

FIGURE 6-5
ULTIMAAX 63K Shown

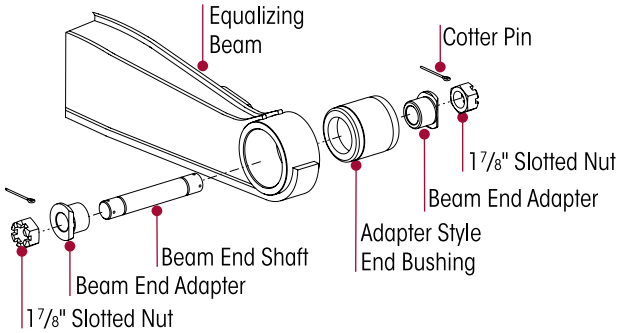

VISUAL INSPECTION

1. Chock the wheels.
2. Visually inspect suspension components for signs of movement or excessive wear.
   - Inspect the equalizing beam end connection for signs of excessive wear or looseness.
   - Look for worn, frayed or distorted rubber in the beam, see Figure 6-6.

- Look for the equalizing beam to be lower in the axle bracket, see Figure 6-6.
- If the adapter style end bushing is visually offset, a floor jack test should be performed, refer to Jack Test in this section.

FIGURE 6-6

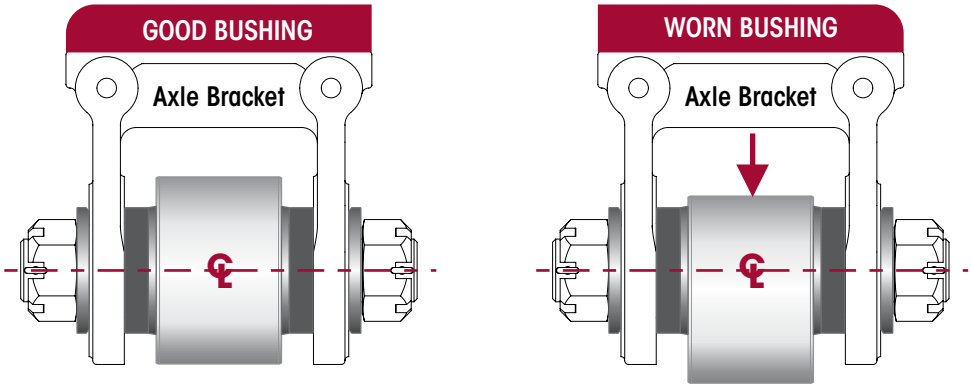

A **GOOD** bushing will result in the equalizing beam end hub appearing to be **centered** with the centerline of the end bushing in the axle bracket

A **WORN** bushing will result in the equalizing beam end hub appearing to be 5/8" (15 mm) **offset/below** the centerline of the end bushing in the axle bracket

3. The beam end adapter style connections have the flange of the adapter cut off for assembly clearance with the axle housing bowl.
   - The flat must be positioned vertically as shown in Figure 6-7. If the flat of the adapter position is incorrect, removal of the fasteners will be necessary to correct position, refer to the Adapter Style End bushings in the Component Replacement Section.

FIGURE 6-7

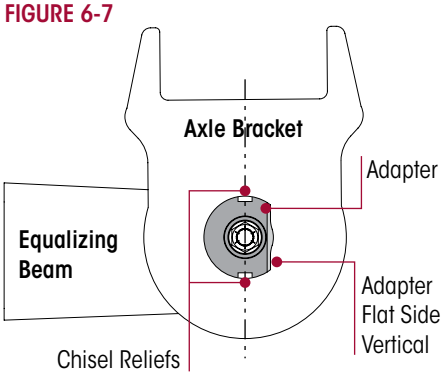

JACK TEST

1. Place a jack under each beam end as shown. Raise the jack to check for movement in the connection or rubber components, see Figure 6-8.

FIGURE 6-8

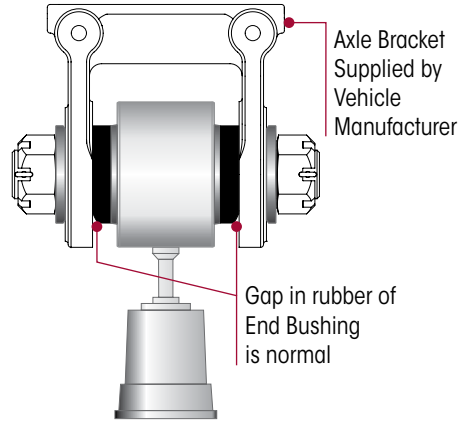

NOTE

The gap at each side of the visible rubber on the lower part of the bar pin end bushing is normal, see Figure 6-8, and is not an indication to replace the bushing. Because all rubber end bushings are in compression, with the load bearing on the top side, the lower side of the rubber is slightly relieved, allowing the rubber to move inward, and a gap appears.

PHYSICAL INSPECTION

WARNING

IF BUSHING MOVEMENT OR LOOSENESS IS NOTED IN THE EQUALIZING BEAM END HUB, DO NOT OPERATE THE VEHICLE. REPLACE THE RUBBER END BUSHINGS AND ALL CONNECTING PARTS. THE ABOVE CONDITION CAN RESULT IN COSTLY REPAIR, DOWNTIME, POSSIBLE SEPARATION OF COMPONENTS, ADVERSE VEHICLE HANDLING, PROPERTY DAMAGE, OR PERSONAL INJURY.

SERVICE HINT An equalizing beam end connection that is visibly cleaner than the other connections may indicate a loose connection.

2. If bushing movement or looseness is detected in the equalizing beam end hub, **DO NOT** operate vehicle. Replace the equalizing beam end bushings and all connecting parts. Refer to the Component Replacement Section of this publication.
3. Check and record torque values, see Figure 6-9. Correct torque values as required making sure all fasteners are tightened to 125 foot pounds + 90° rotation or 700 ± 50 foot pounds torque.

FIGURE 6-9

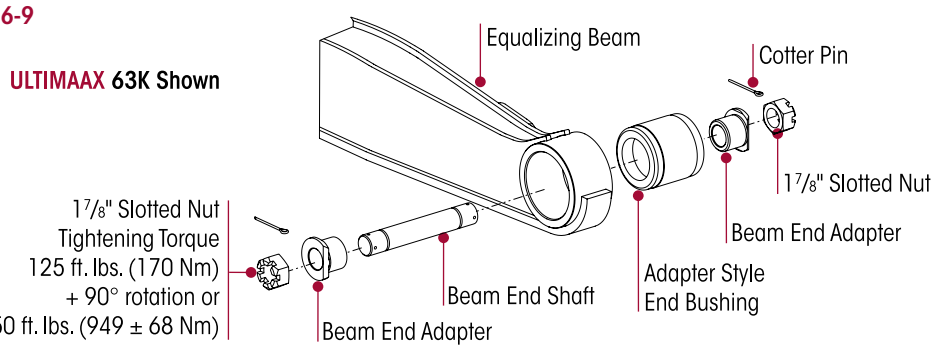

BAR PIN END BUSHINGS

VISUAL INSPECTION

An indication that the bar pin end bushing requires replacement is when one or more of the following conditions apply:

- If the contact area, see Figure 6-10 (the flat face area where bar pin contacts the axle bracket) reveal signs of excessive wear. Replace if bar pin thickness measures less than 1 7/8" (47.59 mm).
- If bar pin bolt holes bores reveal signs of elongation or wear, see Figure 6-10.

FIGURE 6-10
Shim Type Bar Pin End Bushing

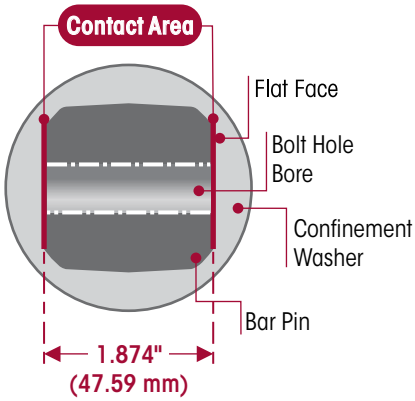

If bar pin measurement is **less than 1.874" (47.59 mm)**, replacement is required.

BAR PIN SHIMS

An indication that the bar pin shims require replacement is when one or more of the following conditions apply:

- Visual inspection of contact area on the shim reveals signs of excessive wear.
- The thickness of any single leg on the shim, is less than the measurement shown in Figure 6-11, replacement of bar pin shim is required.

FIGURE 6-11

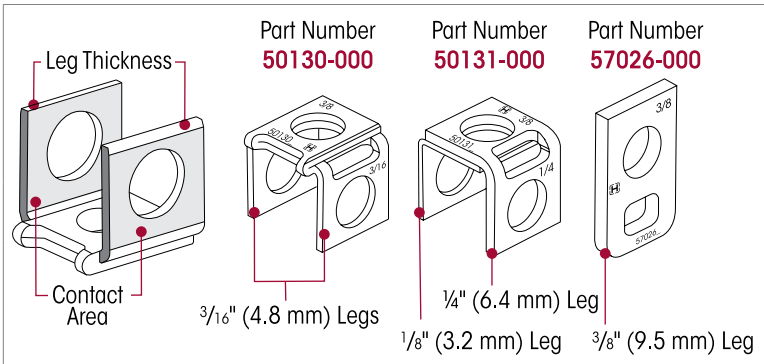

Original Thickness of Shim Leg	Minimum Thickness Required	Part Number
1/8" (3.2 mm)	0.123" (3.1 mm)	50131-000
3/16" (4.8 mm)	0.186" (4.7 mm)	50130-000
1/4" (6.4 mm)	0.248" (6.3 mm)	50131-000
3/8" (9.5 mm)	0.371" (9.4 mm)	57026-000

BEAM END AXLE BRACKETS

NOTE The axle brackets are furnished and welded into position by the vehicle manufacturer or axle manufacturer.

VISUAL INSPECTION

When inspecting the equalizing beam end connection also inspect the axle brackets for damage or cracks, see Figures 6-12, 6-13 and 6-14. Any axle bracket that is found damaged or cracked must be repaired or replaced.

Consult the axle and/or vehicle manufacturer for additional inspections, component repair and replacement instructions.

PHYSICAL INSPECTION

■ Bar Pin Style

a. Inspect the axle brackets for damage or cracks in the locations shown in Figures 6-12 and 6-13. Any axle bracket that is found damaged or cracked must be repaired or replaced.
b. Measure the distance between the axle bracket legs for correct width, refer to Figures 6-12 and 6-13 for measurement location and dimensions. An axle bracket outside of the measurement range must be repaired or replaced.
c. Consult the vehicle manufacturer for inspection, component repair and replacement instructions

FIGURE 6-12

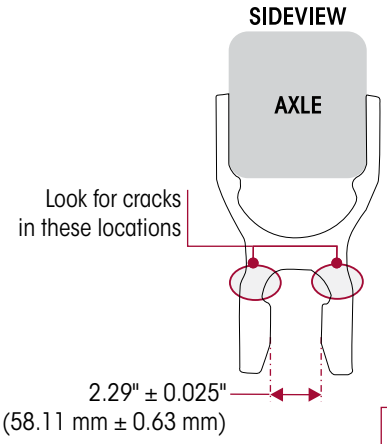

FIGURE 6-13

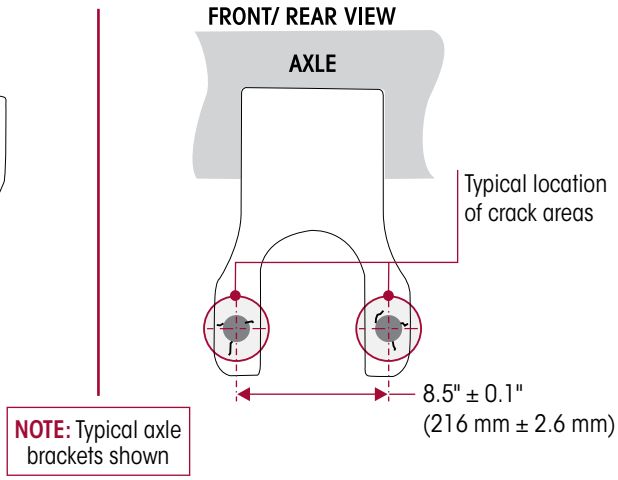

■ Adapter Style

FIGURE 6-14

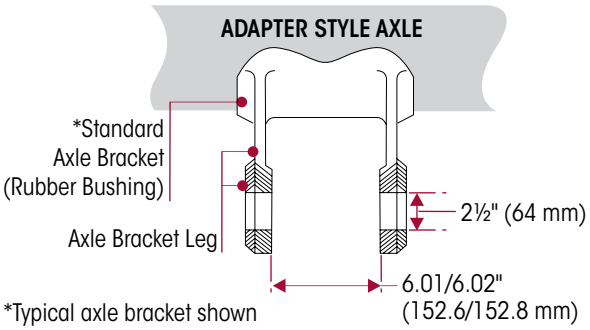

a. Inspect the 2½" (64 mm) diameter holes in each of the axle bracket legs, Figure 6-14.
b. Remove any burrs or material left there by the old adapters.
c. Use a new adapter style bushing as a gauge for fit, being sure it enters the holes from the outside of each bracket leg.
d. Measure the distance between the axle bracket legs for correct width, refer to Figure 6-14 for measurement location and dimensions. The dimension between the inside surfaces of the axle bracket legs is 6.015" ± 0.005" (152.7 mm ± 0.1 mm), see Figure 6-14.

FRAME HANGER ASSEMBLY

The following points are for guidance and intended to assist personnel in determining when frame hanger assembly maintenance is necessary.

INSPECTION

- Inspect the frame hanger for any damage, cracks or signs of adverse or abrasive contact with other components. Some minor wear will be evident where the progressive load spring contacts the frame hanger assembly, see Figure 6-15. If more than half the thickness of the frame hanger plate is damaged or cracked, replace the frame hanger assembly.
- Look for wear in the frame hanger cavity due to contact with the jounce stop, see Figure 6-15. If more than half the thickness of the frame hanger plate is worn or damaged, replace the frame hanger.
- Inspect frame hanger attaching fasteners and frame hanger assembly for signs of looseness or movement. Retighten any loose fasteners to specified torque. Components damaged by loose fasteners must be replaced.

FIGURE 6-15

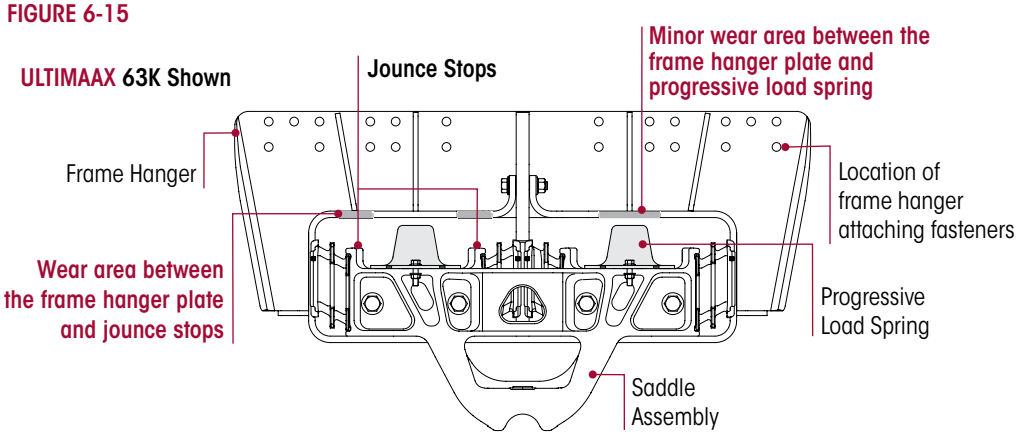

SHEAR SPRINGS

INSPECTION

Inspection of the shear spring should always be conducted with the vehicle in the **UNLOADED** condition.

- Bent or burred edges on the rate plates extending beyond the rubber are acceptable provided the rubber can freely expand during vehicle operation, see Figure 6-16.
- Creases formed by folding of the rubber surface under load are acceptable. These appear as stripes on the surface, polished by wear or covered with tacky (sticky) rubber, see Figure 6-17.

FIGURE 6-16

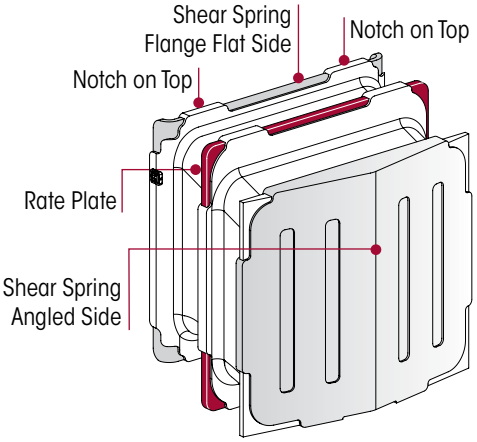

FIGURE 6-17

Polished Appearance — Creases formed by the folding of the rubber surface under load are acceptable.

FIGURE 6-18

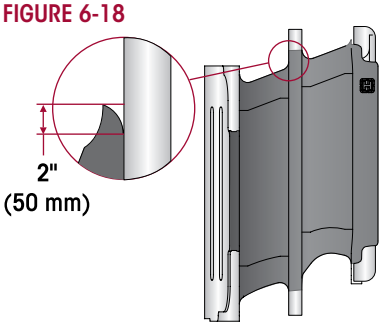

- Bonding separation of the rubber from any of the bonded rate plate surfaces to a maximum depth of approximately 2" (50 mm) is acceptable, see Figure 6-18. If the bonding separation depth is 2" (50 mm) or more, the shear springs require replacement.
- A certain amount of gradual breakup of the rubber surface is acceptable. Use a feeler gauge to measure cuts or splits in the rubber. If the measurement is over a depth of 2" (50 mm), then the shear springs require replacement, see Figures 6-19 and 6-20.

FIGURE 6-19

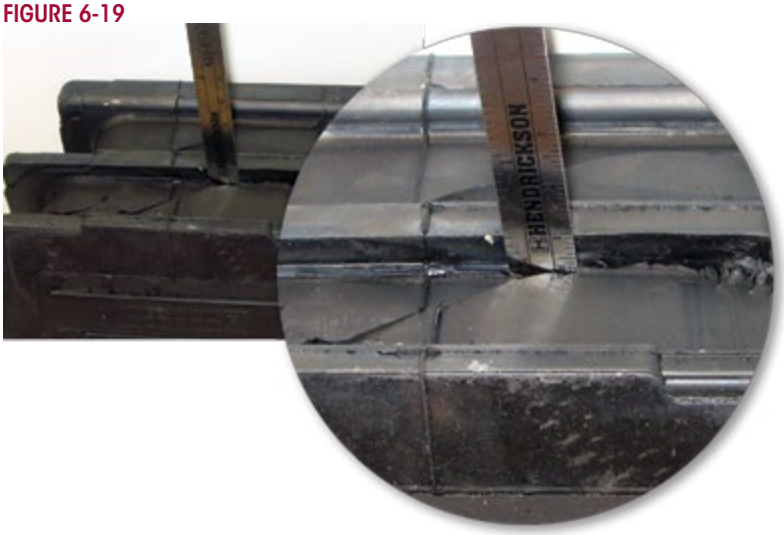

FIGURE 6-20

PROGRESSIVE LOAD SPRINGS (PLS)

NOTE

Hendrickson Lit. No. 48422-592 – ULTIMAAX Gauge Card (Figure 6-21) can be used to measure in the unloaded condition the height of the progressive load spring (PLS), plus the length of cuts / splits and depth of separation of the shear spring and the PLS.

Visually inspect the progressive load springs at regular preventive maintenance intervals. The following points are for guidance and intended to assist personnel in determining when progressive load spring component requires replacement, refer to the Component Replacement Section of this publication.

FIGURE 6-21

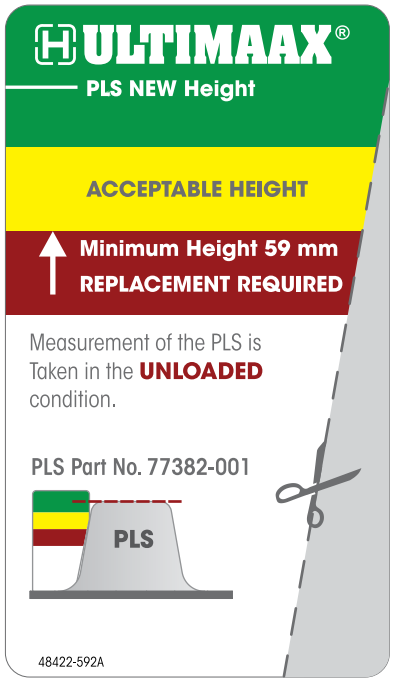

NOTE

The Hendrickson ULTIMAAX suspension progressive load springs must be replaced in pairs (left side pairs or right side pairs or rear position pairs or front position pairs), even if only one PLS shows unacceptable conditions. Replacement of only one PLS can cause uneven wear, and higher premature wear for the one replaced

- Always inspect the progressive load spring with the vehicle in the **UNLOADED** condition.
- The height of a new PLS is 3 1/16" (78 mm). The PLS requires replacement if the height is below 2 5/16" (59 mm), see Figure 6-22.

- A bent or cracked mounting base requires PLS replacement.

FIGURE 6-22

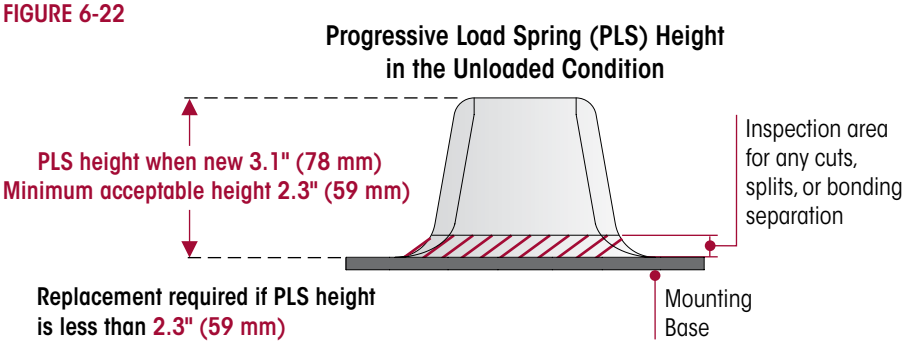

FIGURE 6-23

Polished Appearance — Creases formed by the folding of the rubber surface under load are acceptable.

- If any cuts or splits in the rubber of over 2" (50 mm) in length and an average depth of ½" (13 mm), the effected PLS requires replacement. A certain amount of gradual breakup of the rubber surface is normal. The most probable areas for potential cuts, splits, or wear are shown in Figure 6-22 as "*///////*."
- The **bonding separation depth** of the rubber from the PLS mounting base plate surface (see Figure 6-22) is more than ½" (13 mm), the effected PLS requires replacement.
- Creases formed by folding of the rubber surface under load are acceptable. These appear as stripes on the surface, polished by wear or covered with tacky rubber, see Figure 6-23.

SADDLE CONNECTION

Visually inspect for any signs of movement or looseness and ensure:

- Each saddle is centered on each equalizing beam center bushing.
- The center bushing inner metal is fully seated to the saddle.
- Saddle cap locknuts are tightened to proper torque as specified in the Torque Specifications Section of this publication.

Saddle cap fasteners — While tightening the saddle cap fasteners maintain an even gap between the saddle and saddle cap, see Figure 6-24.

NOTE Tightening the saddle cap fasteners properly will help prevent wear of mating components.

FIGURE 6-24

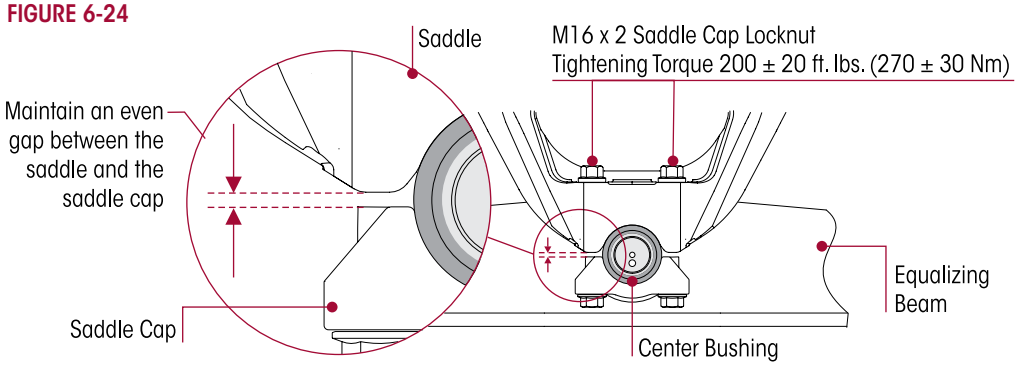

CROSS TUBE

The ULTIMAAX cross tube connects the two (2) equalizing beams through the equalizing beam's center bushings, see Figure 6-25. The cross tube has clearance to float side-to-side in the center bushings.

The length of the cross tube will allow side-to-side movement of approximately 2⅜" (60 mm). For this reason, the cross tube **may appear polished** or missing paint at each end where it enters into the center bushings. This is normal. Also, the cross tube will rattle in straight position which is acceptable.

FIGURE 6-25

ULTIMAAX 63K Shown

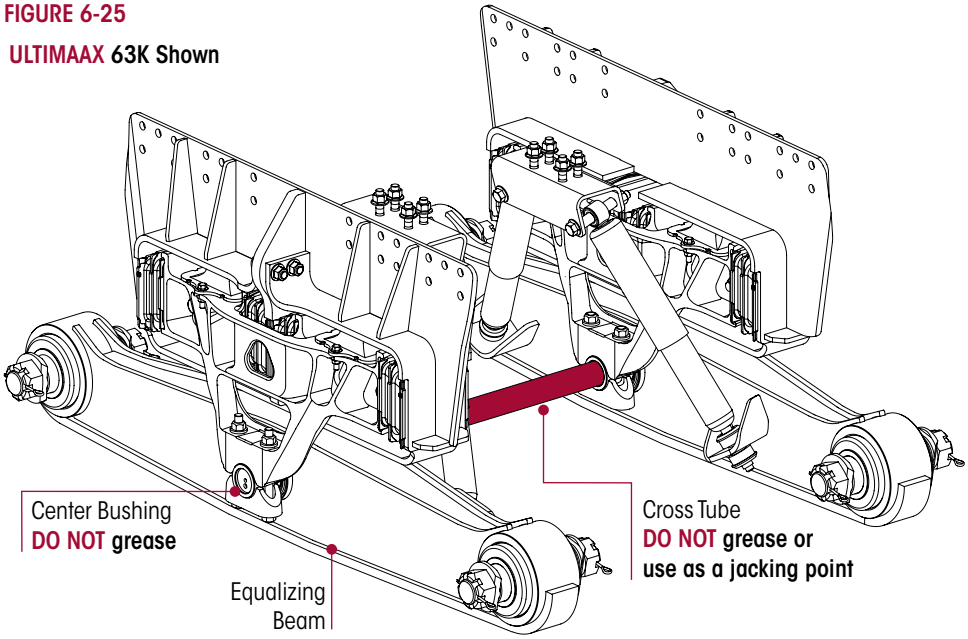

WARNING

IMPROPER JACKING METHODS CAN CAUSE STRUCTURAL DAMAGE WHICH CAN CAUSE ADVERSE VEHICLE HANDLING, PROPERTY DAMAGE OR SEVERE PERSONAL INJURY AND WILL VOID HENDRICKSON'S WARRANTY.

- DO NOT USE THE SUSPENSION CROSS TUBE AS A JACKING POINT, REFER TO VEHICLE MANUFACTURER FOR PROPER JACKING INSTRUCTIONS.
- ACCEPTABLE LIFTING POINTS FOR A VEHICLE AT THE RATED LOAD INCLUDE BUT NOT LIMITED TO: THE AXLE, EQUALIZING BEAM, AND THE VEHICLE FRAME RAIL. REFER TO THE VEHICLE MANUFACTURER FOR PROPER JACKING INSTRUCTIONS.

DO NOT grease or lubricate the cross tube or the center bushing and **DO NOT** use the cross tube as a jacking point, see Figure 6-25.

VISUAL INSPECTION

- Visually inspect the overall condition of the cross tube for dents, dings, or bent condition, replace as necessary.

NOTE A bent cross tube may cause misalignment of the axles, which may cause abnormal tire wear.

- Use a straight edge to inspect the straightness of the cross tube, replace as necessary.

TORQUE RODS

WARNING

THE ULTIMAAX SUSPENSION INCORPORATES TORQUE RODS FOR VEHICLE STABILITY. IF THESE COMPONENTS ARE DISCONNECTED OR ARE NON-FUNCTIONAL THE VEHICLE SHOULD NOT BE OPERATED. FAILURE TO DO SO CAN RESULT IN ADVERSE VEHICLE HANDLING AND POSSIBLE TIRE CONTACT WITH THE FRAME OR THE SUSPENSION.

Visually inspect torque rod bushings for any torn or shredded rubber, inspect for bent, cracked, or broken torque rods, and for end hubs with any elongated "oval" shape. Any of these conditions will require component replacement.

Torque rod looseness inspection is necessary per the following method below.

- With the vehicle shut down, a lever check can be made with a long pry bar placed under each rod end and pressure applied.

TORQUE ROD LENGTH

Longitudinal torque rod length is determined by the vehicle manufacturer for optimum drive-line angles. The longitudinal torque rods maintain these angles and control acceleration and brake forces.

Transverse torque rod length is also determined by the vehicle manufacturer to center the axles under the frame.

- If the lateral alignment of the axles is incorrect, it may be necessary to shim the transverse torque rod at the straddle mount end. Shims can be installed between the transverse torque rod and the transverse torque rod frame bracket or between the transverse torque rod and axle tower bracket. Refer to vehicle manufacturer for proper shim location; also see Lateral Alignment in the Alignment & Adjustments Section of this publication.
- The transverse torque rods also control axle walk-out during cornering. The mounting brackets at the axle housing end of the torque rods are furnished and welded into position on the axle housings by the axle or vehicle manufacturer.

FIGURE 6-26

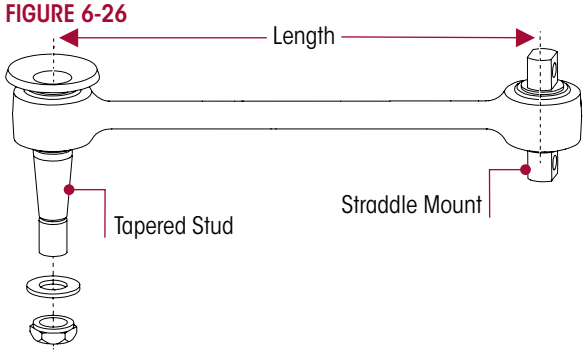

Transverse and longitudinal torque rods have attaching ends designated as "straddle mount," or "tapered stud" as shown in Figure 6-26. Most can be replaced by pressing out the worn torque rod bushing and installing a replacement bushing, others require complete torque rod assembly replacement.

It is important that the tightening torque of the nuts be checked during preventive maintenance service. Follow the vehicle manufacturer's specifications for tightening torque values.

The tapered stud torque rod locknuts also should be checked. Refer to the Torque Specification Section of this publication for proper torque values.

SHOCK ABSORBERS

NOTE It is not necessary to replace shock absorbers in pairs if one shock absorber requires replacement.

Hendrickson offers a long service life, premium shock absorber for use on ULTIMAAX suspensions. If shock absorber replacement is necessary, Hendrickson recommends that original Hendrickson shock absorbers be replaced with identical Hendrickson Genuine parts for servicing. Failure to do so will affect the suspension performance, durability, and will void the warranty. Inspection of the shock absorber can be performed by doing a heat test, and a visual inspection. For instructions on shock absorber replacement see the Component Replacement Section of this publication.

FIGURE 6-27

HEAT TEST

1. Drive the vehicle at moderate speeds on rough road for minimum of fifteen minutes.

⚠ WARNING DO NOT GRAB THE SHOCK AS IT COULD POSSIBLY CAUSE PERSONAL INJURY.

2. Use an infrared thermometer to check the temperature of the shock absorber. This can also be performed by carefully touching the shock body below the dust cover. Touch the frame to get an ambient reference, see Figure 6-27. A warm shock absorber is acceptable, a cold shock absorber should be replaced.
3. To inspect for an internal failure, remove and shake the suspected shock. Listen for the sound of metal parts rattling inside. Rattling of metal parts can indicate that the shock has an internal failure.

VISUAL INSPECTION

Look for any of the potential problems shown in Figure 6-28 when doing a visual inspection. Inspect the shock absorbers fully extended. Replace as necessary.

FIGURE 6-28

SHOCK ABSORBER VISUAL INSPECTION - UNACCEPTABLE CONDITIONS

LEAKING VS. MISTING SHOCK VISUAL INSPECTION

FIGURE 6-29

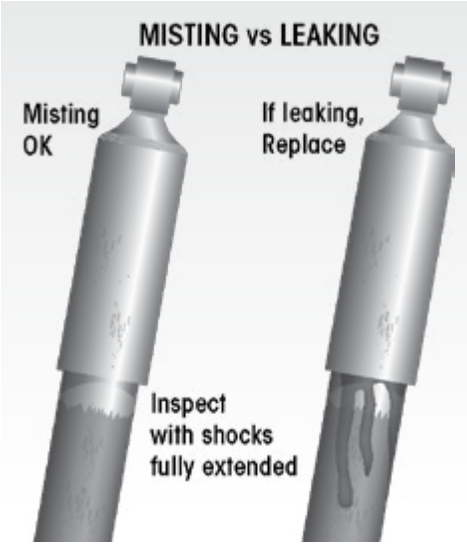

The inspection must not be conducted after driving in wet weather or a vehicle wash. Shocks need to be free from water. Many shocks are often misdiagnosed as failures. Misting is the process whereby very small amounts of shock fluid evaporate at a high operating temperature through the upper seal of the shock, see Figure 6-29. When the "mist" reaches the cooler outside air, it condenses and forms a film on the outside of the shock body. Misting is perfectly normal and necessary function of the shock. The fluid, which evaporates through the seal area helps to lubricate and prolong the life of the seal.

A shock that is truly leaking and needs to be replaced will show signs of fluid leaking in streams from the upper seal. These streams can easily be seen when the shock is fully extended, underneath the main body (dust cover) of the shock. Look for these potential problems when doing a visual inspection. Inspect the shock absorbers fully extended. Replace as necessary.

NOTE The ULTIMAAX suspension is equipped with a premium seal on the shock, however this seal will allow for misting to appear on the shock body (misting is not a leak and is considered acceptable).

If the shock is damaged, install new shock absorber and replace as detailed in the Component Replacement Section of this publication.

SECTION 7
Alignment & Adjustments

AXLE ALIGNMENT

- **The primary control for axle alignment** is the location of the frame hanger assemblies on the frame rail as installed by the vehicle manufacturer, and the location of the axle brackets on the axles as installed by the axle or vehicle manufacturer.
- **Axle centering and pinion angles** are controlled by the torque rods.
- **Ride height** is controlled by the design of the suspension frame hanger. No adjustment is possible.

DRIVE AXLE PINION ANGLE

Drive axle pinion angles are established by the vehicle manufacturer. If pinion angle adjustment is required, check for proper angles with the vehicle manufacturer. Pinion angle is set by the longitudinal torque rod length.

TO CHECK THE PINION ANGLE

FIGURE 7-1

1. Use a work bay with a level floor.
2. Relax the suspension by slowly moving the vehicle back and forth several times in a straight line without using the brakes. This will slacken or loosen the suspension as the vehicle is positioned. End with all wheels positioned straight ahead. Roll to a stop without the brakes being applied. DO NOT set the parking brake.
3. Chock the front wheels of the vehicle.
4. Place a digital protractor on the axle housing as shown in Figure 7-1.
5. Check to see if the pinion angle is correct per the vehicle manufacturer's specified range.
6. If necessary, add/remove shims at the longitudinal torque rod connections as required to achieve the proper pinion angle.
7. When the pinion angle is correct tighten all fasteners to the proper torque specifications per the vehicle manufacturer and recheck the pinion angles.
8. Remove wheel chocks.

DRIVE AXLE ALIGNMENT

NOTE Drive axle alignment with suspensions equipped with **adapter style beam** end connections **ARE NOT** adjustable.

Computerized alignment equipment is the preferred method of measuring alignment. To calculate the shim thickness required, the target offset must be converted to thrust angle, see alignment equipment manufacturer for procedures. If, however, computerized axle alignment equipment is not available refer to the following Inspection in this section.

Proper alignment is essential for maximum ride quality, performance, and tire service life. The following recommended alignment procedure as described below, should be performed if excessive or irregular tire wear is observed.

NOTE Proper vehicle alignment can only be achieved when all axles are aligned to the vehicle's centerline and the steering axle's caster, camber and toe-in settings are within specifications.

FIGURE 7-2

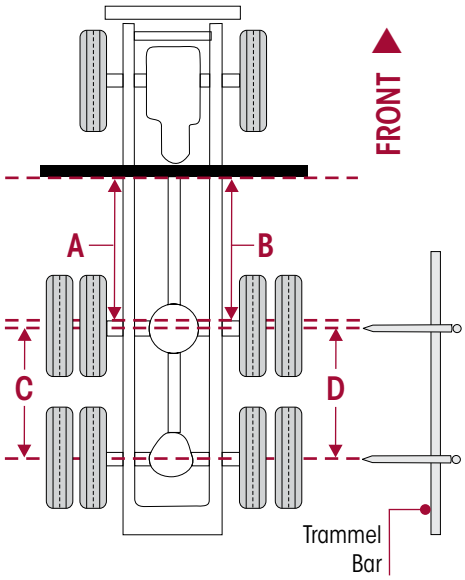

INSPECTION

1. Use a work bay with a level, flat surface.
2. Relax the suspension by slowly moving the vehicle back and forth several times in a straight line. This will slacken or loosen the suspension as the vehicle is positioned. End with all wheels positioned straight ahead.
3. **DO NOT** set the parking brake. Chock the front wheels of the vehicle.
4. Verify the vehicle system air is at full operating pressure.
5. Verify all suspension components are in good condition. Repair or replace any worn or damaged suspension components before proceeding with the alignment process.
6. Ensure all drive axle tires are at the same size.
7. Securely clamp a six-foot piece of **STRAIGHT** bar stock or angle iron across the lower frame flange as shown in Figure 7-2. Select a location for the bar stock or angle iron as far forward of the drive axle as possible where components will not interfere.
8. Accurately square the bar stock or angle iron to the frame using a carpenter's square.
9. Using a measuring tape, measure from the straight edge to the forward face of the front drive axle arms on both sides of the vehicle as shown in Figure 7-2, dimensions **A** and **B**.
10. Calculate the difference between measurements **A** and **B**.
    a. If the **front** drive axle is within vehicle manufacturer's specifications, proceed to check the rear drive axle (Step 11).
    b. If alignment of the **front** drive axle **IS NOT** within the vehicle manufacturer's specifications, then the alignment of this axle **MUST** be corrected **BEFORE** measuring the rear drive axle alignment (Step 11).
    c. If the suspension is equipped with bar pin end bushings, correct the alignment of this axle by following the bar pin alignment instructions in this section.

NOTE Since the remaining drive axle will be aligned relative to the front drive axle, it is essential that the front drive axle is aligned within the vehicle manufacturer's specifications prior to the alignment of the remaining drive axle.

11. Using a trammel bar, measure the distance from the spindle center of the **front** drive axle to the spindle center of the rear drive axle on both sides of the vehicle; see Figure 7-2, **C** and **D**.
12. Calculate the difference between measurements **C** and **D**.
    a. If the measurements are within the vehicle manufacturer's specifications, then the **rear** drive axle alignment is acceptable.
    b. If alignment of the **rear** drive axle **IS NOT** within the vehicle manufacturer's specifications, then the alignment of this axle **MUST** be corrected.
    c. If the suspension is equipped with bar pin end bushings, correct the alignment of this axle by following the Bar Pin with Shims Alignment instructions in this section.
13. Recheck measurements to confirm adjustments. Repeat Steps 10 through 12 until the correct alignment is achieved.
14. After all drive axles are aligned, check the pinion angle of each drive, refer to the Axle Pinon Angle in this section.

AXLE LATERAL ALIGNMENT

1. Use a work bay with a level floor.
2. Drive the vehicle slowly, straight ahead. Try to slacken or loosen the suspension as the vehicle is positioned. End with all wheels positioned straight ahead. Try to roll to a stop without the brakes being used. **DO NOT** set the parking brake.
3. Chock the front wheels of the vehicle.
4. Measure from the outside of the frame rail to the rim flange of the inner tire. Record the measurement **A** and **B**, see Figure 7-3.
5. Measure the same distance on the opposite side of the same axle. Record the measurement **C** and **D**, see Figure 7-3.

FIGURE 7-3

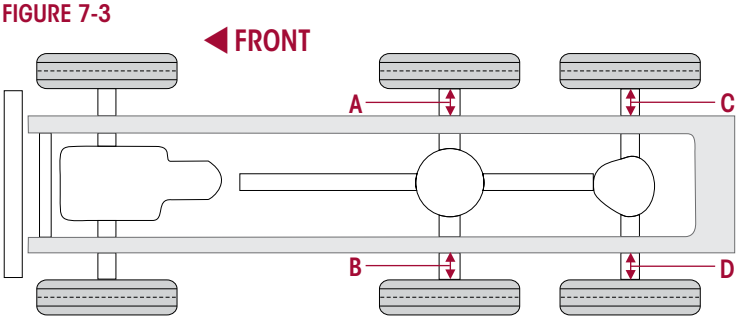

6. Verify the axle lateral alignment is within the vehicle manufacturer's specifications. Adding or removing shims that are located between the transverse torque rod and the frame rail will normally correct the axle lateral alignment.
   - A general rule of thumb is to use a torque rod shim with a thickness that is half of the difference between the two measurements.

EXAMPLE If the axle lateral alignment is out of specification by ¼" (6 mm), remove or install a ⅛" (3 mm) torque rod shim between the transverse torque rod and frame rail as needed. Refer to Longitudinal and Transverse Torque Rod Section in Preventive Maintenance Section of this publication.

NOTE Hendrickson recommends the use of Grade 8 bolts and Grade C locknuts. Washers are not necessary when flanged fasteners are used.

BAR PIN ALIGNMENT

The alignment feature consists of specially designed, tightly tolerance steel shims which fill the ⅜" (9.5 mm) total gap between the bushing's bar pin and the axle bracket legs. The gap must be filled by placing the shims on the bushing assembly in one of the positions shown in Figure 7-4. Hendrickson has three shim designs options for alignment, part number 50130-000 (provided), 50131-000 and 57026-000, see Figure 7-7.

FIGURE 7-4

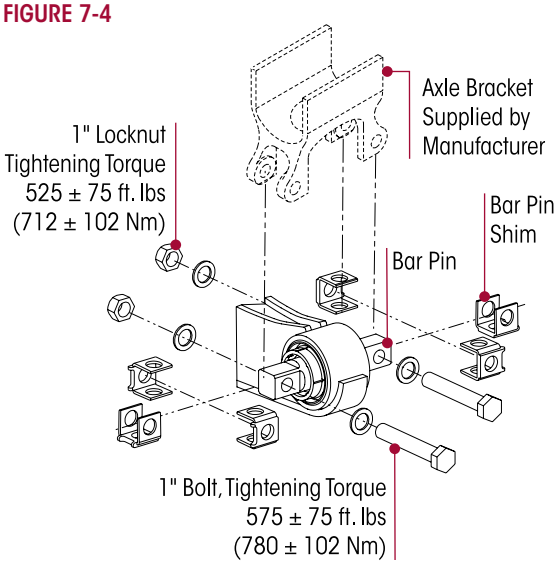

WARNING A BAR PIN SHIM MUST BE INSTALLED AT EACH BOLT LOCATION. THE SAME PART NUMBER SHIM IN THE SAME ORIENTATION MUST BE USED AT BOTH BOLT LOCATIONS ON ANY ONE END BUSHING. DO NOT INSTALL OR STACK MORE THAN ONE SHIM AT EACH BOLT LOCATION. USE GENUINE HENDRICKSON BAR PIN SHIMS, DO NOT USE STANDARD WASHERS. FAILURE TO FOLLOW THESE WARNINGS MAY RESULT IN IMPROPER VEHICLE ALIGNMENT, FRACTURE OF THE AXLE BRACKET OR BAR PIN WHICH COULD RESULT IN THE ADVERSE VEHICLE HANDLING AND POSSIBLE PERSONAL INJURY OR PROPERTY DAMAGE.

ALIGNMENT ADJUSTMENT

FIGURE 7-5

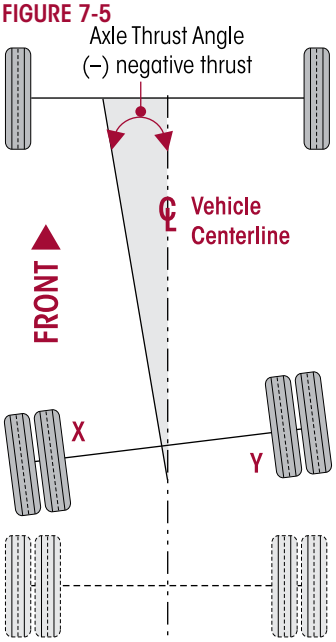

If alignment of the drive axles is required, as determined by an alignment inspection procedure, the following steps will need to be performed.

1. Determine direction of axle thrust angle. Figure 7-5 illustrates the forward drive axle with a thrust angle to the left (-negative thrust).

SERVICE HINT Axle movement is in the same direction as the increased shim thickness, see Figure 7-6.

2. To determine where to adjust shim thickness use measurement **A** and **B** for front drive axle or **C** and **D** for rear drive axle, see Figure 7-1.

SERVICE HINT Axle adjustment will be on the side of the bar pin where shim thickness is increased. For example, to correct the axle thrust angle illustrated in Figure 7-5, shim thickness will need to be increased at the front of the bar pin (Location X) and/or the rear of the bar pin (Location Y).

NOTE Computerized alignment equipment is the preferred method of measuring alignment. To calculate the shim thickness required the target offset must be converted to thrust angle, see alignment equipment manufacturer for procedures.

3. Chock the wheels of the front axles to prevent vehicle movement during service.
4. Raise the frame of the vehicle to remove the load from the suspension. Support the frame at this height.
5. Support the equalizing beam and remove the fasteners from the end bushing where the bar pin alignment shim adjustment is being made.
6. Adjust shim thickness to move the axle in the desired direction, see Figure 7-6.

WARNING EACH EQUALIZING BEAM END BUSHING HAS ONE INBOARD AND ONE OUTBOARD ALIGNMENT SHIM, FOR A TOTAL OF FOUR SETS OF TWO ALIGNMENT SHIMS PER SUSPENSION. EACH SET OF ALIGNMENT SHIMS FOR A PARTICULAR BEAM END BUSHING MUST BE INSTALLED IN THE SAME ORIENTATION. SHIM ORIENTATION MAY DIFFER FOR EACH BEAM END BUSHING, SEE FIGURE 7-4. FAILURE TO FOLLOW THESE WARNINGS MAY RESULT IN THE FRACTURE OF EITHER THE AXLE BRACKET OR BAR PIN WHICH COULD RESULT IN THE ADVERSE VEHICLE HANDLING AND POSSIBLE PERSONAL INJURY OR PROPERTY DAMAGE.

WARNING THE BAR PIN ALIGNMENT SHIM (PART NO. 50130-000) MUST BE INSTALLED WITH THE FOLDED EDGE FACING AWAY FROM THE BUSHING, SEE FIGURE 7-7. FAILURE TO DO SO MAY RESULT IN SHIM DAMAGE, IMPROPER ALIGNMENT, DAMAGE OR FRACTURE OF THE AXLE BRACKET OR BAR PIN WHICH COULD RESULT IN THE ADVERSE VEHICLE HANDLING AND POSSIBLE PERSONAL INJURY OR PROPERTY DAMAGE.

7. Install new end bushing fasteners and tighten to:
   - At the **locknut** to 525 ± 75 foot pounds torque, or
   - At the **bolt head** to 575 ± 75 foot pounds torque

FIGURE 7-6

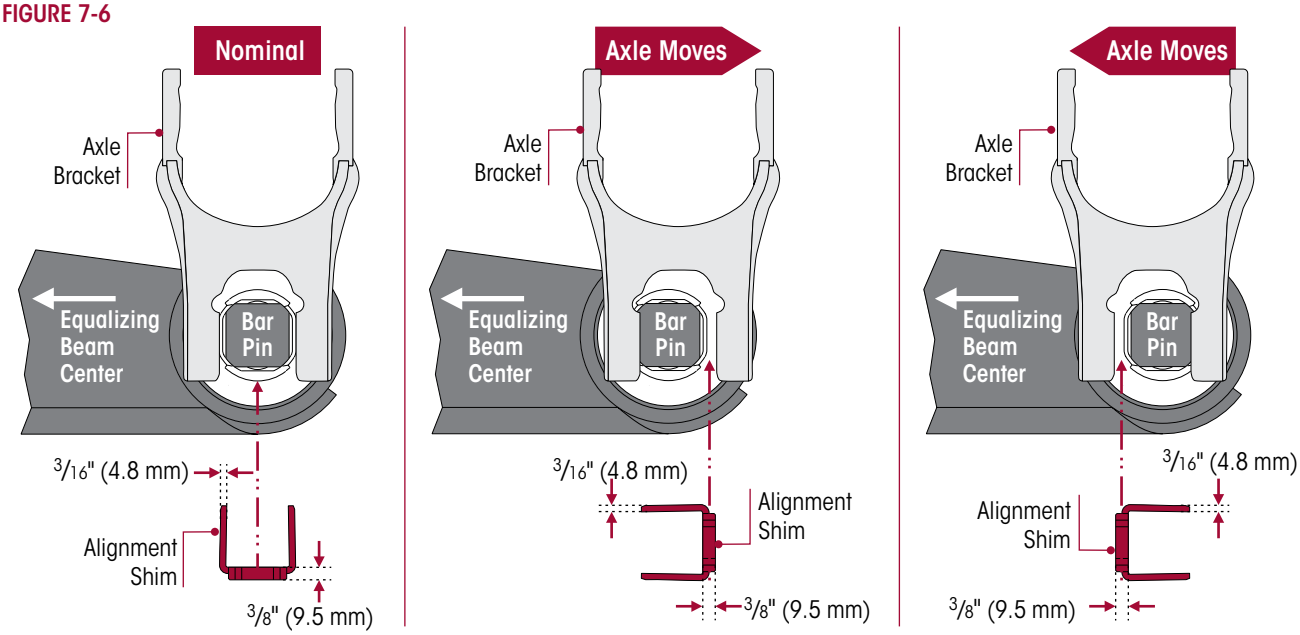

FIGURE 7-7

BAR PIN ALIGNMENT SHIMS

The following service notes will help when performing Hendrickson equalizing beam bar pin alignment

- The standard alignment shims supplied with each suspension (P/N 50130-000) have two 3/16" (4.8 mm) legs and a 3/8" (9.5 mm) back. Rotating the shim pairs 90° will change the axle alignment in ± 3/16" (4.8 mm) increments.
- If a finer adjustment is required use alignment shim (P/N 50131-000). This alignment shim has one 1/8" (3.2 mm) leg, one 1/4" (6.4 mm) leg, and a 3/8" (9.5 mm) back. A total of 3/4" (19 mm) adjustment is achievable to the axle. A 3/8" (9.5 mm) flat shim is also available (P/N 57026-000).
- 1/16" (1.5 mm) shim thickness increases thrust angle by 0.10".
- To accomplish a thrust angle adjustment rotate the alignment shims on the bar pin of the end bushing. Axle movement will be in the direction of the shim thickness increase.
- Axle thrust angle may be adjusted at either wheel end on an axle. If insufficient adjustment is available at one wheel end, the opposing wheel end will also need to be adjusted, but in the opposite direction.

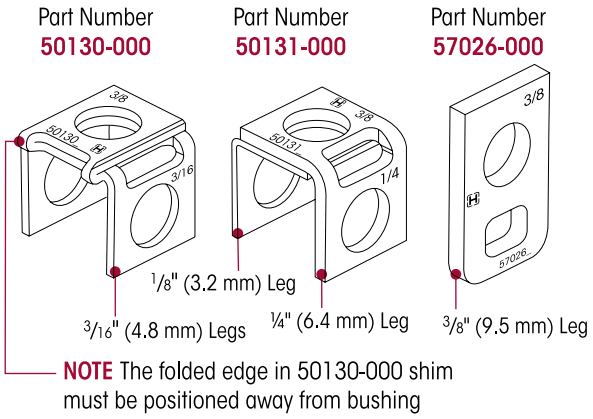

Example: The alignment equipment shows the front drive axle to have a 0.40° thrust angle to the left. This will require a 1/4" (6.4 mm) shim thickness increase to the front side of the left front equalizing beam end bushing. If there is less than 1/4" (6.4 mm) of adjustment available at this location then some of the adjustment will have to be made at the rear of the right front end bushing. In this case a 1/8" (3.2 mm) shim thickness increase at the front side of the left front bar pin **AND** a 1/8" (3.2 mm) shim thickness increase at the rear side of the right front bar pin will correct the 0.40° thrust angle.

8. Remove support and lower the vehicle.
9. Verify the axles' alignments are within the vehicle manufactures tolerance.
10. Set brakes and remove wheel chocks.

SECTION 8
Component Replacement

FASTENERS

When servicing an ULTIMAAX suspension, Hendrickson recommends replacing all removed fasteners with new equivalent fasteners. Maintain correct torque values at all times. Check torque values as specified, see Hendrickson's Torque Specifications Section of this publication. If non-Hendrickson fasteners are used follow torque specifications listed in the vehicle manufacturer's service manual.

NOTE Torque values shown in this publication apply only if Hendrickson supplied fasteners are used. If non-Hendrickson fasteners are used, follow the torque specifications listed in the vehicle manufacturer's service manual.

SHOCK ABSORBER

NOTE It is not necessary to replace shock absorbers in pairs if one shock absorber requires replacement.

DISASSEMBLY

1. Chock the front wheels of the vehicle.
2. Remove the lower shock absorber nylon locknut, retainer washer and rubber bushing from the shock absorber stud, see Figure 8-1.
3. Remove the fasteners from the upper shock bracket and remove shock absorber.

FIGURE 8-1

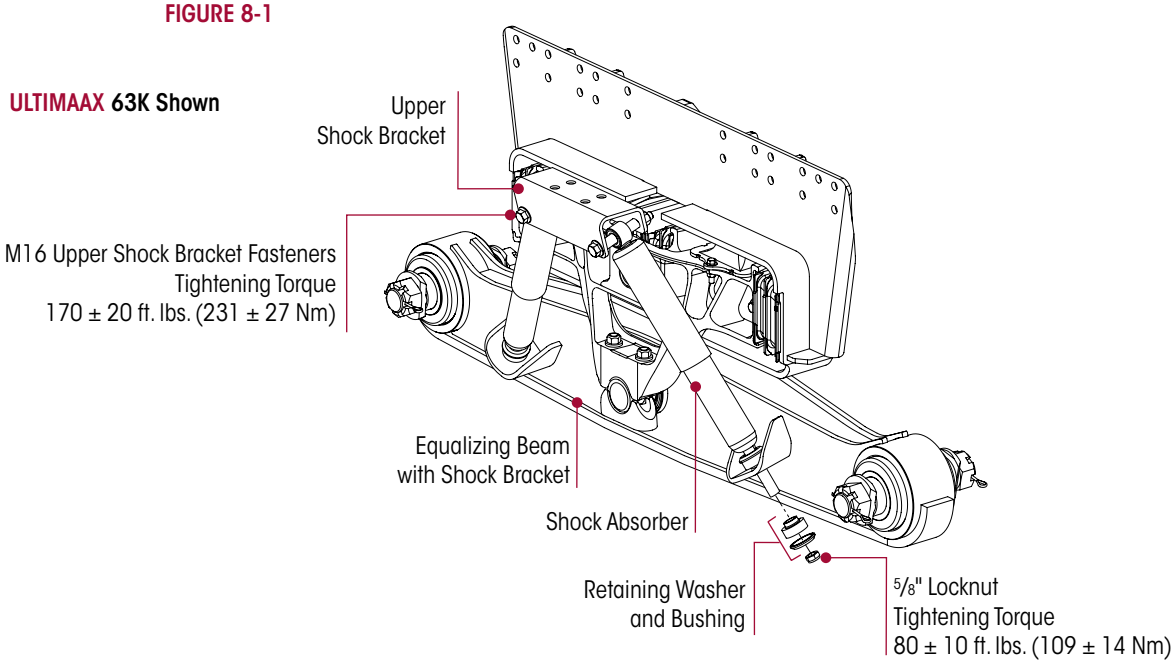

ASSEMBLY

1. Mount the shock absorber in the upper shock bracket and install fasteners, tighten to 170 ± 20 foot pounds torque, see Figure 8-1.
2. Locate the shock absorber stud in the lower shock bracket and install the rubber bushing, retainer washer and nylon locknut. Tighten to 80 ± 10 foot pounds torque, see Figure 8-1.
3. Remove the wheel chocks.

SHEAR SPRING / FRAME HANGER ASSEMBLY / SADDLE ASSEMBLY

You will need:

- **Saddle Disassembly Tool** No. 66086-113L and **Saddle Assembly Tool** No. 66086-108L, refer to the Special Tools Section of this publication.

FIGURE 8-2

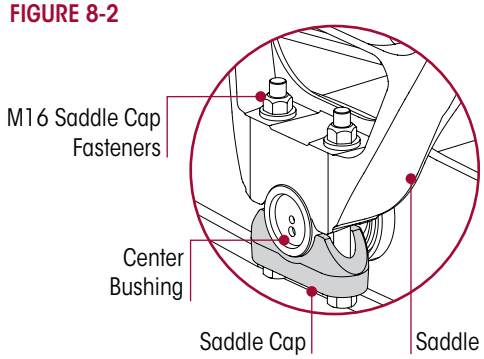

DISASSEMBLY

1. Chock the front wheels of the vehicle.
2. Raise and support the drive axles.
3. Remove the drive tires from the side of the vehicle being serviced.
4. Remove and discard the M16 saddle cap fasteners that attach the saddle assembly to the center bushing, see Figure 8-2.
5. Raise the vehicle's frame just enough to create a ½" (13 mm) gap between the saddle assembly and center bushing. Support the vehicle's frame at this height.
6. Remove the progressive load springs M10 fasteners and discard, see Figure 8-4.
7. Remove the progressive load springs.
8. Apply NLGI #2–EP (Extreme Pressure) chassis lubricant to the threaded rod of the saddle disassembly tool, Part No. 66086-113L, see Figure 8-3.

FIGURE 8-3
Saddle Disassembly Tool
Hendrickson Part No.66086-113L

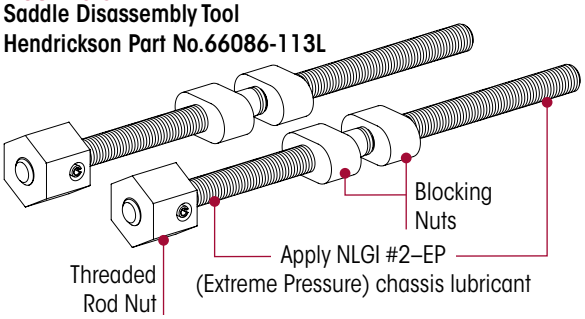

FIGURE 8-4

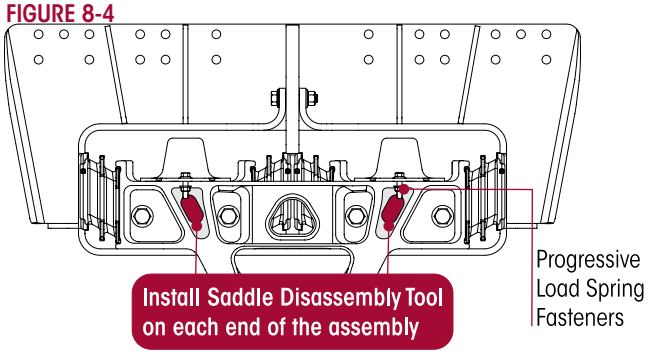

NOTE The threaded rod spacer and spacer nut are designed and orientated to fit into the saddle assembly openings, see Figure 8-5.

9. Install both saddle disassembly tools on each end of one saddle assembly, rotate the threaded rod blocking nuts until each are oriented properly into the saddle assembly openings, see Figures 8-4 and 8-5.

FIGURE 8-5

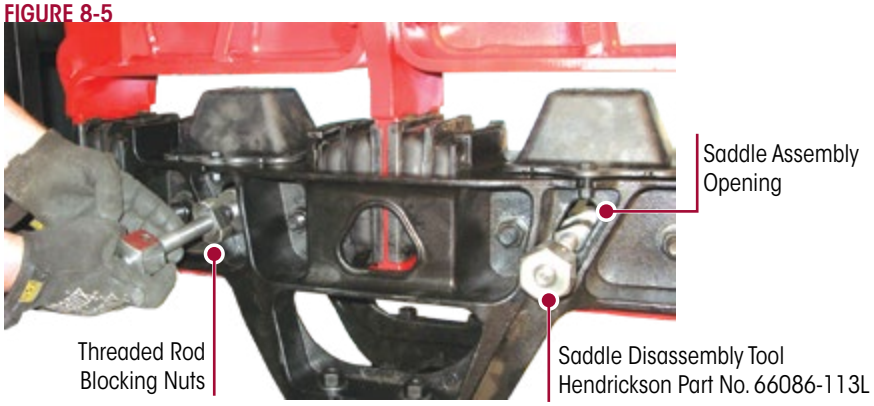

SERVICE HINT Use a rachet strap attached to each saddle half and the frame or vehicle body to secure the saddle halves during removal.

10. Snug the saddle disassembly tool.

NOTE The shear springs are in each frame hanger are compressed when installed.

11. Remove and discard the M20 saddle fasteners, see Figure 8-6.
12. To separate the two saddle halves, evenly rotate the threaded rod nut to tighten the saddle disassembly tool, see Figure 8-6.
13. Remove the saddle halves and / or shear springs for replacement.

FIGURE 8-6

ULTIMAAX 63K Shown

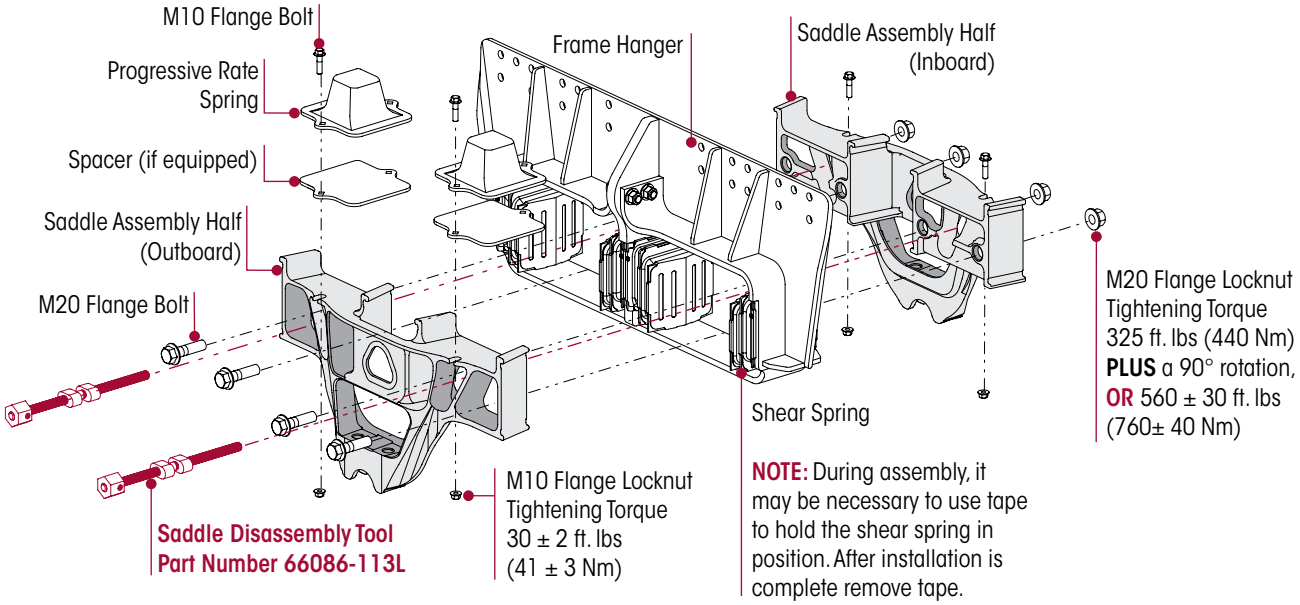

CAUTION EACH FRAME HANGER ASSEMBLY WEIGHS APPROXIMATELY 104 TO 140 POUNDS (47 TO 63 KILOGRAMS), USE APPROPRIATE LIFTING DEVICES TO REMOVE OR INSTALL THE FRAME HANGER ASSEMBLY. FAILURE TO DO SO CAN RESULT IN DAMAGE TO THE VEHICLE OR PERSONAL INJURY.

14. If replacing the frame hanger, remove the frame fasteners per the vehicle manufacturer's instructions. Remove frame hanger.

ASSEMBLY

1. If installing a new frame hanger continue to Step 2. If installing or servicing shear springs or saddle assembly , proceed to Step 3.

CAUTION EACH FRAME HANGER ASSEMBLY WEIGHS APPROXIMATELY 104 TO 140 POUNDS (47 TO 63 KILOGRAMS), USE APPROPRIATE LIFTING DEVICES TO REMOVE OR INSTALL THE FRAME HANGER ASSEMBLY. FAILURE TO DO SO CAN RESULT IN DAMAGE TO THE VEHICLE OR PERSONAL INJURY.

2. Position the frame hanger assembly against the frame rail. Install fasteners per the vehicle manufacturer's instructions.

SERVICE HINT During assembly, it may be necessary to use tape to hold the shear springs in position. After installation is complete remove tape.

3. Position the shear springs with the flanged flat side against the frame hanger with the shear spring angled downward, see Figure 8-7.

FIGURE 8-7

ULTIMAAX 63K Shown

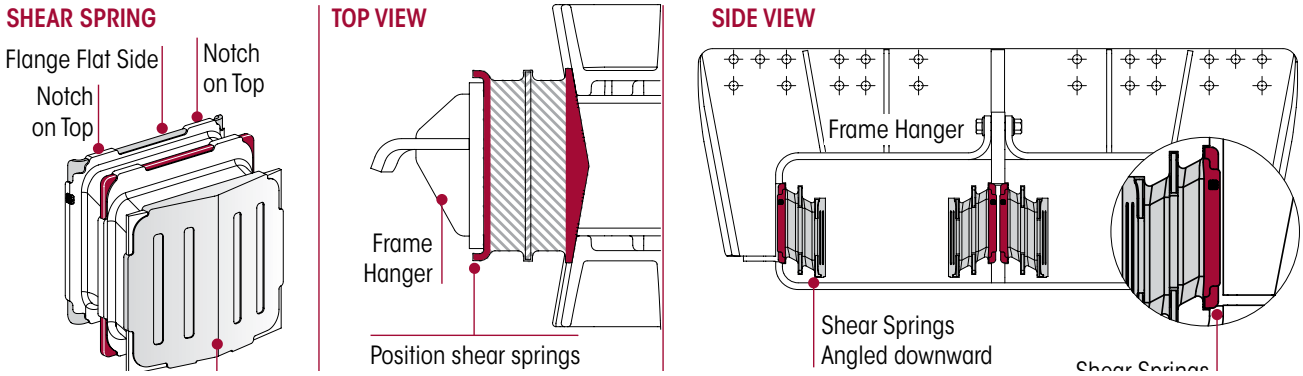

4. Apply NLGI #2–EP (Extreme Pressure) chassis lubricant to the threaded rod of the Saddle Assembly Tool No. 66086-108L, see Figure 8-8.

FIGURE 8-8
Saddle Assembly Tool
Hendrickson Part No. 66086-108L

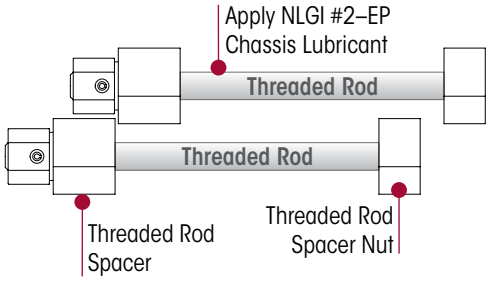

NOTE The threaded rod spacer and spacer nut are designed and orientated to fit into the saddle assembly openings, see Figure 8-10.

5. Apply P-80 lubricant to the shear spring's angled face and to the mating face of the saddle halves, see Figure 8-9.

FIGURE 8-9

ULTIMAAX 63K Shown

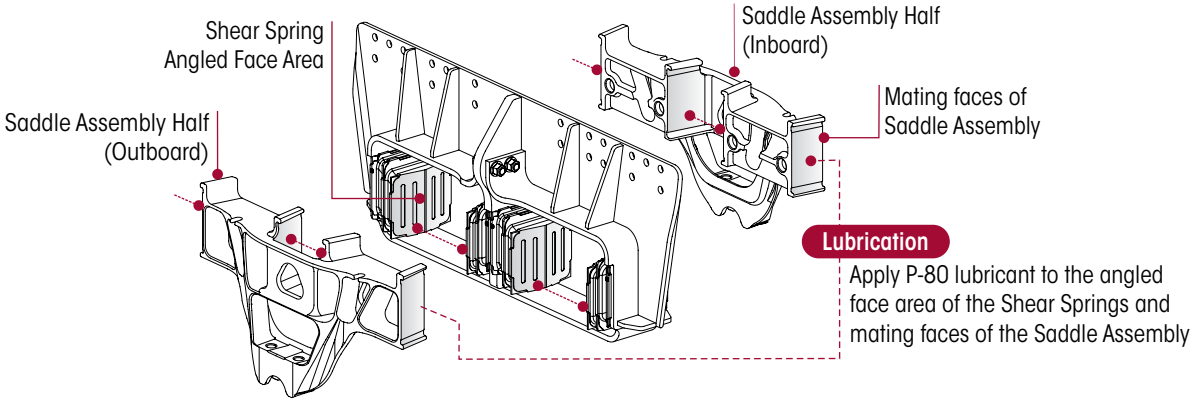

6. On each side of one saddle assembly, rotate the threaded rod spacers and spacer nuts of the saddle assembly tool until each are oriented properly into the saddle assembly openings, see Figure 8-10.

SERVICE HINT Use a mechanism to attach to the frame to aid in holding the saddle up while performing procedure (such as a strap or rope) attached to each saddle half and the frame or the vehicle body to secure the saddle halves during installation or have an additional person assist to align the saddle halves properly.

7. Position the inner saddle half into the frame hanger along with the shear springs, outer saddle half and the saddle assembly tool, see Figure 8-11.
8. Bring both saddle halves together with the **saddle assembly tool**. Evenly tightening the saddle assembly tool until both saddle halves are seated against each other.

FIGURE 8-10

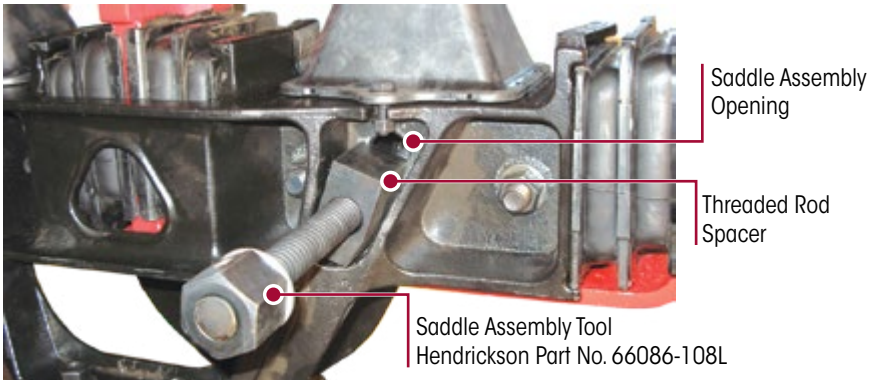

FIGURE 8-11

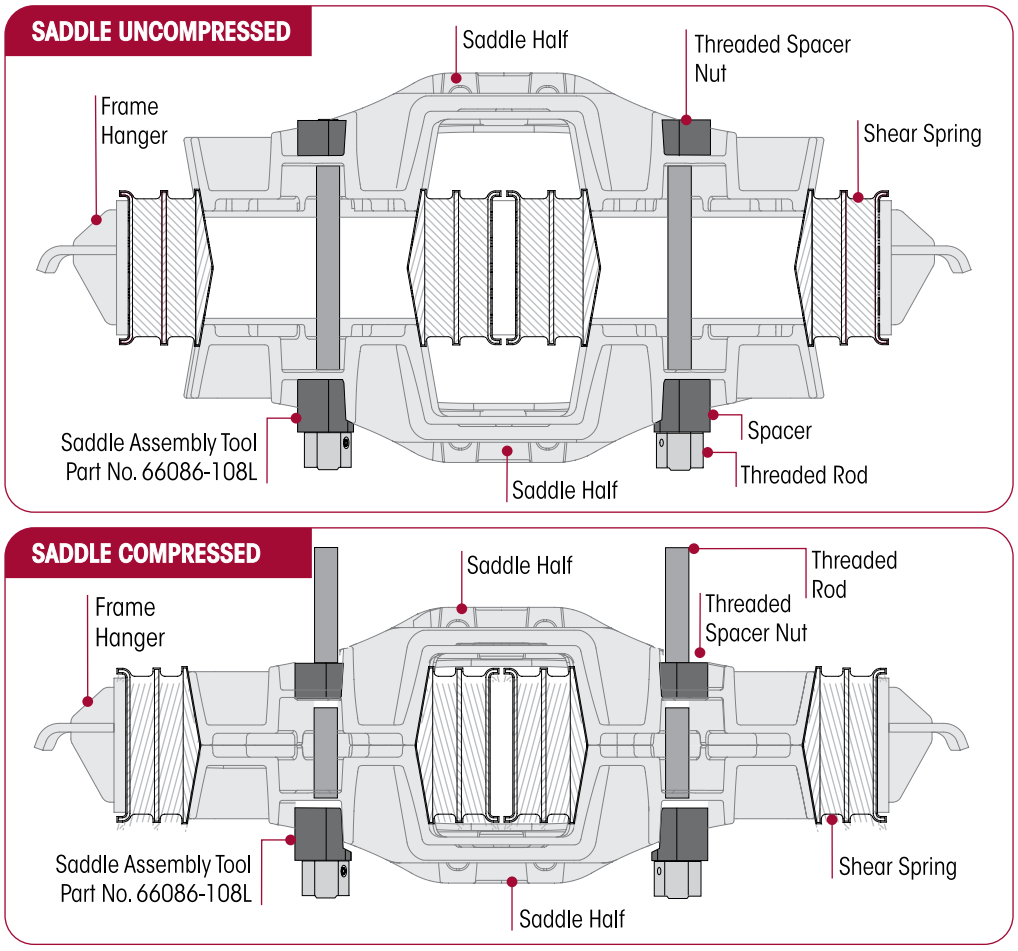

9. Install the new M20 flange saddle fasteners. Tighten in the proper sequence shown in Figure 8-12 to 325 foot pounds plus a 90° rotation, or 560 ± 30 foot pounds torque.
10. Remove temporary tape from the shear springs if used during assembly.
11. Remove each of the saddle assembly tools.
12. Install the progressive load springs (PLS).
13. Install the progressive load spring M10 flange fasteners. Tighten to 30 ± 2 foot pounds torque.
14. Remove the frame supports.
15. Lower the frame of the vehicle while engaging the saddles on the equalizing beam's center bushings, see Figure 8-13.

FIGURE 8-12

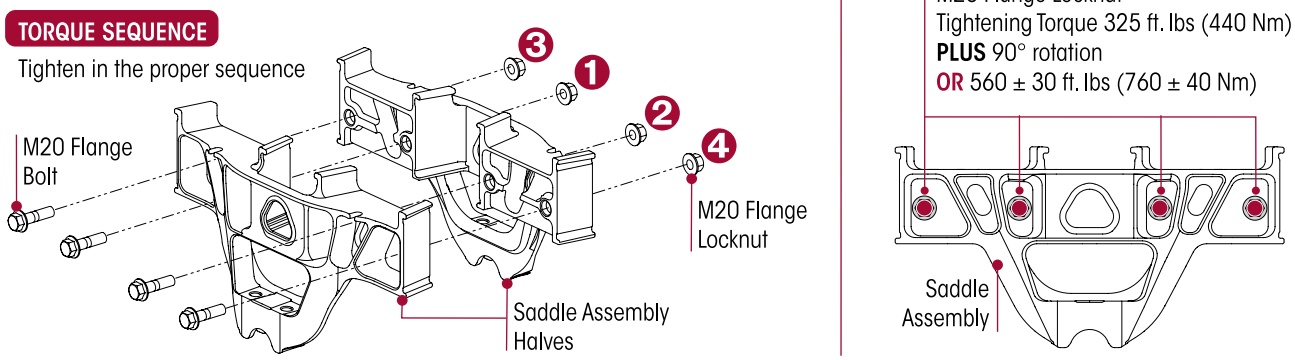

FIGURE 8-13

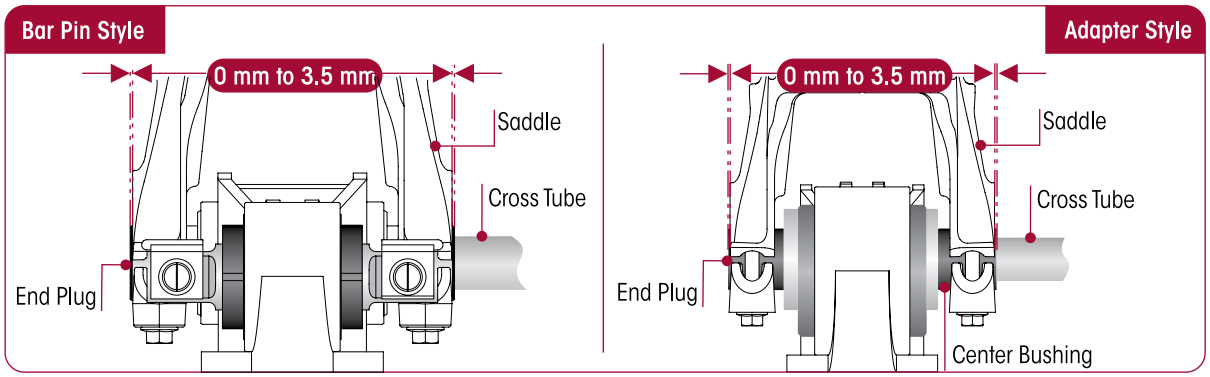

CAUTION

A SADDLE ASSEMBLY IS ATTACHED TO THE CENTER BUSHING OF EACH EQUALIZING BEAM WITH TWO (2) SADDLE CAPS. EACH SADDLE CAP USES TWO (2) BOLTS TO CLAMP THE CENTER BUSHING INNER METAL TO THE SADDLE. EACH SADDLE CAP MUST BE INSTALLED SO THAT THERE IS AN EVEN GAP BETWEEN THE SADDLE CAP AND THE BASE OF THE SADDLE LEGS AS SHOWN IN FIGURE 8-14. IF EACH SADDLE CAP IS NOT INSTALLED EVENLY, THE SADDLE LEGS COULD BECOME DEFORMED, RESULTING IN BENT BOLTS OR DAMAGED SADDLES.

NOTE

Tightening the saddle cap fasteners properly will help prevent wear of mating components, such as the beam center bushing, saddle, and saddle cap.

16. While tightening the saddle cap fasteners maintain an even gap between the saddle and saddle cap, see Figure 8-14.

FIGURE 8-14

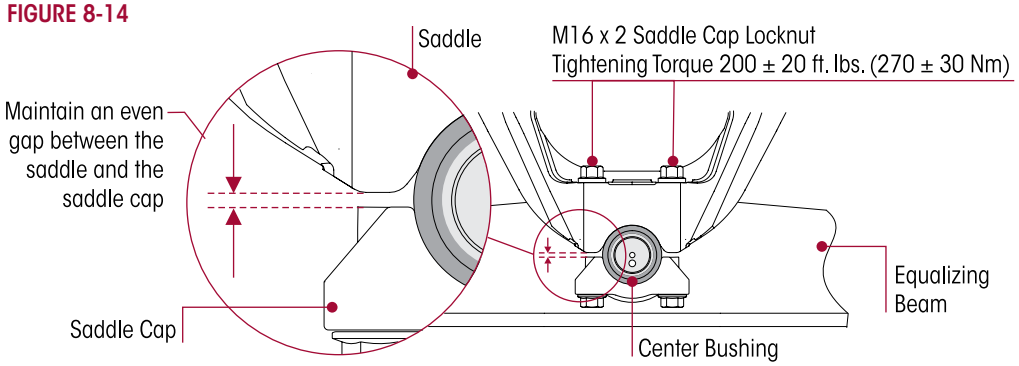

FIGURE 8-15

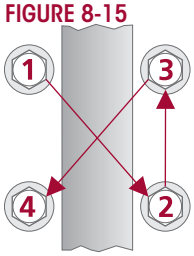

17. Install the saddle cap fasteners and tighten evenly in several steps to 200 ± 20 foot pounds torque in proper sequence to achieve uniform bolt tension, see Figure 8-15.
18. Install the tires.
19. Remove supports from the axles and lower the vehicle onto the ground.
20. Remove the wheel chocks.

PROGRESSIVE LOAD SPRING (PLS)

NOTE The Hendrickson ULTIMAAX suspension progressive load springs must be replaced in pairs (left side pairs or right side pairs or rear position pairs or front position pairs), even if only one PLS shows unacceptable conditions. Replacement of only one PLS can cause uneven wear, and higher premature wear for the one replaced.

DISASSEMBLY

1. Chock the front wheels of the vehicle.
2. Raise the vehicle's frame until the saddle assembly contacts the bottom of the frame hanger assembly. Support the vehicle's frame at this height with safety stands.
3. Remove and discard the four M10 flange bolts that attach the progressive load springs to the saddle assembly, see Figure 8-16.
4. Remove the PLS from the frame hanger assembly.

FIGURE 8-16

ULTIMAAX 63K Shown

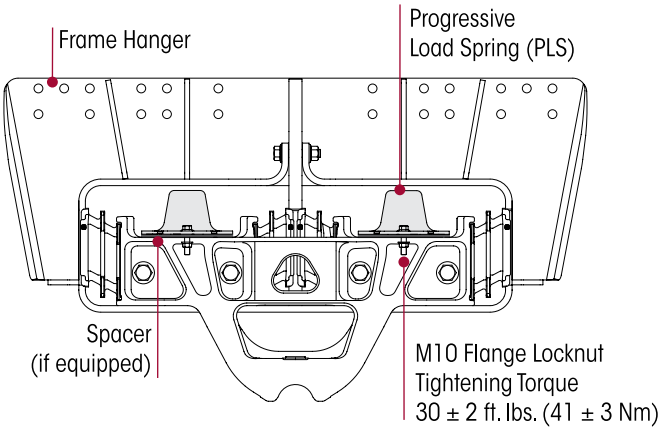

ASSEMBLY

1. Install the PLS into the frame hanger assembly.
2. Install the four M10 flange bolts that attach the PLS to the saddle assembly. The flange bolts **must** be installed with the lock-nuts facing downward as shown in Figure 8-16.
3. Tighten the PLS fasteners to 30 ± 2 foot pounds torque.
4. Remove the frame safety stands and lower the vehicle.
5. Remove the wheel chocks.

EQUALIZING BEAM

DISASSEMBLY

1. Chock the wheels of the steer axle.
2. Raise and support the drive axles with safety stands.
3. Remove the tires.
4. Support the pinion angle of the drive axles to prevent axle movement during service.
5. Remove the saddle cap bolts from both inboard and outboard sides of the equalizing beam.
6. Remove the saddle caps, see Figure 8-17.

FIGURE 8-17

ULTIMAAX 63K Shown

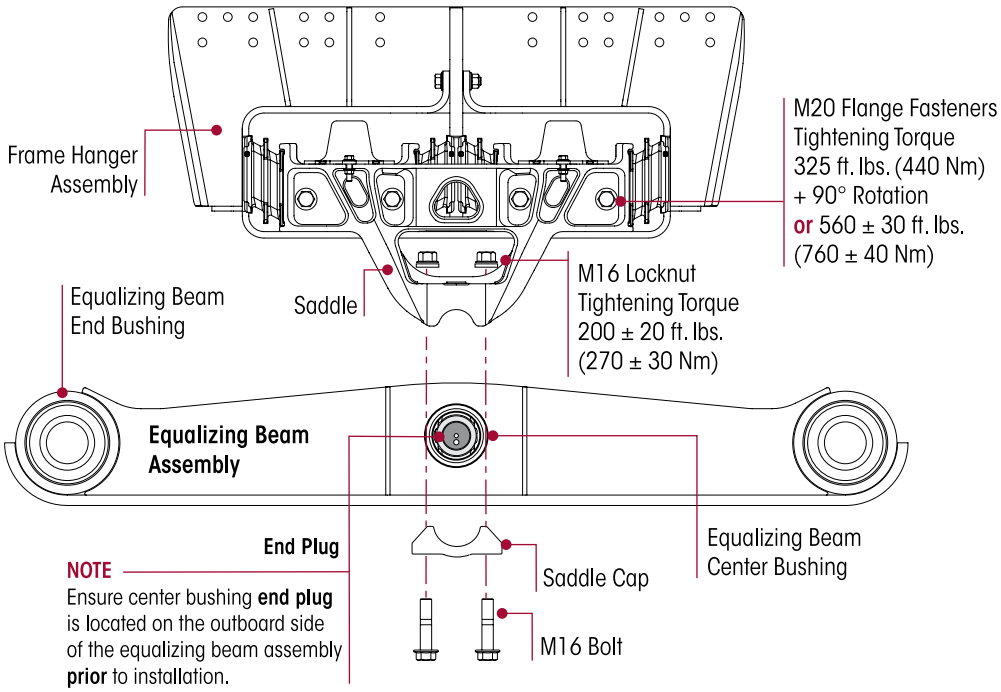

7. Raise the vehicle's frame just enough to create a ½" (13 mm) gap between the saddles and the center bushings. Support the vehicle's frame at this height with safety stands.

WARNING

THE WEIGHT OF THE EQUALIZING BEAM ASSEMBLY IS APPROXIMATELY 285 POUNDS (130 KILOGRAMS). PRIOR TO REMOVING THE END BUSHING BOLTS FROM THE EQUALIZING BEAM, SUPPORT THE END OF THE EQUALIZING BEAM TO PREVENT IT FROM DROPPING. CARE SHOULD BE TAKEN AT REMOVAL AND INSTALLATION TO PREVENT PERSONAL INJURY OR DAMAGE TO COMPONENTS.

8. Support both equalizing beams under the center bushing with floor jacks.
9. **Adapter Style End Bushing –** Proceed to Step 11.

NOTE

Prior to disassembly of the equalizing beam bar pin fasteners, note the orientation of the bar pin alignment shims. It is required that the bar pin alignment shims are installed in the same orientation and location as removed to preserve the existing vehicle alignment. Improper vehicle alignment can increase tire wear.

10. **Bar Pin Style End Bushing –** Note the orientation and location of the bar pin shims.
11. Remove and discard end bushing fasteners.

SERVICE HINT

The center bushing will allow the cross tube and the equalizing beam to angle downward once the equalizing beam end fasteners are removed.

12. Slowly lower the floor jacks and remove the equalizing beams from the axle brackets.

WARNING

PRIOR TO REMOVING BOTH EQUALIZING BEAMS, SUPPORT THE PINION OF EACH DRIVE AXLE. FAILURE TO DO SO CAN RESULT IN PERSONAL INJURY OR ALLOW THE AXLES TO SHIFT MAKING REASSEMBLY MORE DIFFICULT.

13. Slide the equalizing beams off the cross tube and out from under the vehicle.
14. Remove the floor jacks from under the equalizing beams.

ASSEMBLY

1. Position the equalizing beams under the axles with floor jacks.

SERVICE HINT Ensure the equalizing beam's center bushing end plug is located on the outboard side of the equalizing beam, see Figure 8-17.

2. Push down and install the cross tube into the center bushings of both equalizing beams.

SERVICE HINT Increasing or decreasing the pinion angle may help align the axle bracket and the equalizing beam end bushings.

WARNING THE WEIGHT OF THE EQUALIZING BEAM ASSEMBLY IS APPROXIMATELY 285 POUNDS (130 KILOGRAMS). PRIOR TO REMOVING THE END BUSHING BOLTS FROM THE EQUALIZING BEAM, SUPPORT THE END OF THE EQUALIZING BEAM TO PREVENT IT FROM DROPPING. CARE SHOULD BE TAKEN AT REMOVAL AND INSTALLATION TO PREVENT PERSONAL INJURY OR DAMAGE TO COMPONENTS.

3. Using the floor jacks, slowly raise both equalizing beams and cross tube as an assembly into the axle brackets. Ensure each equalizing beam end bushing correctly engages its respective axle bracket.
4. **Adapter Style End Bushing –** Proceed to Step 6.
5. **Bar Pin Style End Bushing –** Install bar pin shims in the same orientation and location as noted prior to disassembly.
6. Install new end bushing fasteners into both beams. Tighten the end bushing fasteners to:
   - **Adapter Style End Bushing** – 125 foot pounds + 90° rotation **or** 700 ± 50 foot pounds torque.
   - **Bar Pin Style End Bushing at the** –
     - Locknuts 525 ± 75 foot pounds (712 ± 102 Nm) **or**
     - Bolthead 575 ± 75 foot pounds (780 ± 102 Nm) torque
7. Remove the frame supports.
8. Lower the frame of the vehicle while engaging and centering the saddles on the equalizing beam's center bushings, see Figure 8-18.

FIGURE 8-18

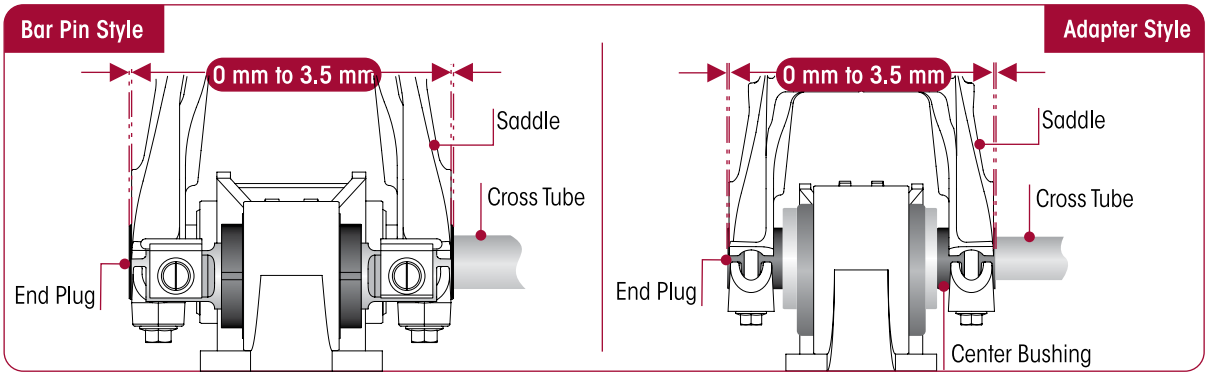

CAUTION A SADDLE ASSEMBLY IS ATTACHED TO THE CENTER BUSHING OF EACH EQUALIZING BEAM WITH TWO (2) SADDLE CAPS. EACH SADDLE CAP USES TWO (2) BOLTS TO CLAMP THE CENTER BUSHING INNER METAL TO THE SADDLE. EACH SADDLE CAP MUST BE INSTALLED SO THAT THERE IS AN EVEN GAP BETWEEN THE SADDLE CAP AND THE BASE OF THE SADDLE LEGS AS SHOWN IN FIGURE 8-19. IF EACH SADDLE CAP IS NOT INSTALLED EVENLY, THE SADDLE LEGS COULD BECOME DEFORMED, RESULTING IN BENT BOLTS OR DAMAGED SADDLES.

NOTE Tightening the saddle cap fasteners properly will help prevent wear of mating components, such as the beam center bushing, saddle, and saddle cap.

9. While tightening the saddle cap fasteners maintain an even gap between the saddle and saddle cap, see Figure 8-19.
10. Tighten the saddle cap fasteners evenly in several steps to 200 ± 20 foot pounds torque in proper sequence to achieve uniform bolt tension, see Figure 8-20.

FIGURE 8-19

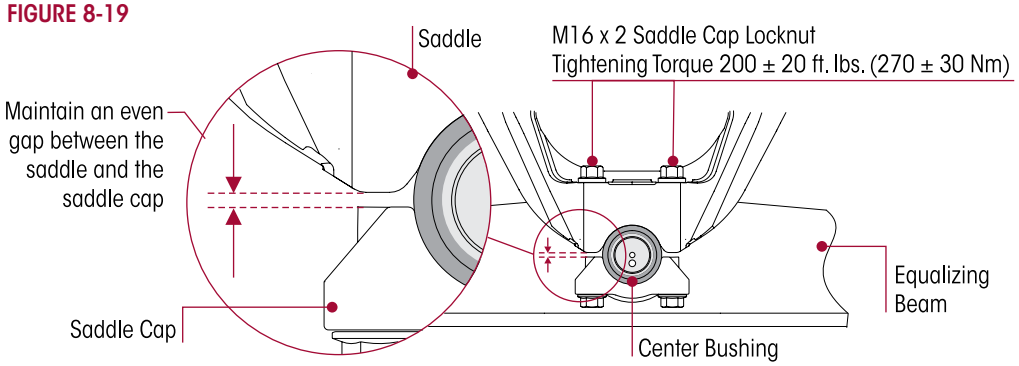

FIGURE 8-20

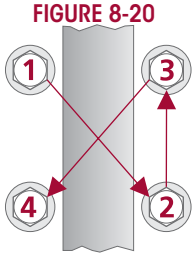

11. Tighten the saddle cap fasteners evenly in several steps to 200 ± 20 foot pounds torque in proper sequence to achieve uniform bolt tension, see Figure 8-20.
12. Install the tires.
13. Remove the support from the axles and lower the vehicle onto the ground.
14. Remove the wheel chocks.

EQUALIZING BEAM CENTER BUSHING

You will need:

- Vertical shop press with a capacity of at least 100 Tons.
- Center bushing tools – Receiving Tool No. 66086-112, Installation Tool No. 66086-107 and Removal Tool No. 66086-110, see Special Tools Section of this publication.

DISASSEMBLY

1. Remove the equalizing beam assembly from the vehicle. Follow the equalizing beam disassembly procedure in this section.

WARNING

DO NOT USE A CUTTING TORCH TO REMOVE ANY FASTENERS OR BUSHINGS. THE USE OF HEAT ON SUSPENSION COMPONENTS WILL ADVERSELY AFFECT THE STRENGTH OF THESE PARTS. A COMPONENT DAMAGED IN THIS MANNER CAN RESULT IN THE ADVERSE VEHICLE HANDLING AND POSSIBLE PERSONAL INJURY OR PROPERTY DAMAGE.

2. Place the equalizing beam assembly in a shop press with the center hub firmly supported on the receiving tool or on the press, see Figure 8-21.
3. Install the center bushing removal tool, ensure it is centered on the center bushing.

FIGURE 8-21

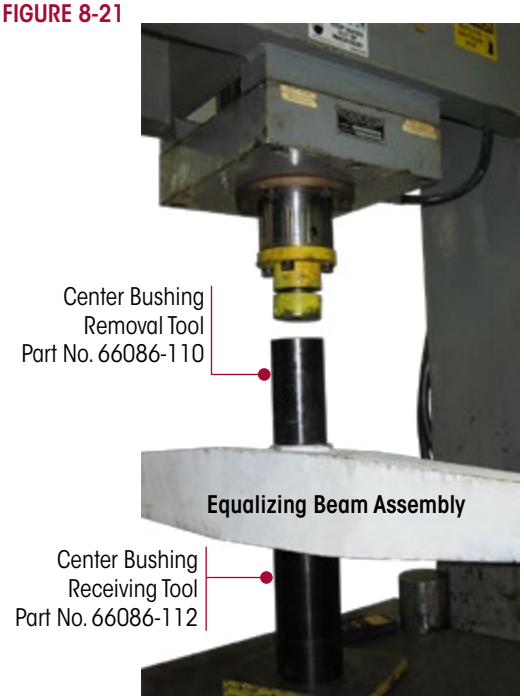

4. Push directly on center bushing removal tool until the center bushing is pressed out of the equalizing beam bore, see Figure 8-21.
5. Inspect the beam bore.

INSPECTION

After removing the center bushing, thoroughly inspect the beam bore. If damaged, replace with a new equalizing beam. **DO NOT** attempt to re-bush or use an equalizing beam that has been damaged.

WARNING

FAILURE TO REPLACE AN EQUALIZING BEAM THAT HAS BEEN DAMAGED FROM BUSHING REMOVAL CAN RESULT IN THE FAILURE OF THAT BEAM, LEADING TO ADVERSE VEHICLE HANDLING AND POSSIBLE PERSONAL INJURY OR PROPERTY DAMAGE.

When installing new center bushings the following steps will minimize the chance of damaging a new bushing:

1. Clean the bore of the equalizing beam with emery cloth or ball hone, removing any nicks or metal buildup from bushing removal.
2. Measure the inside diameter of the equalizing beam center bore. The specification for the **inside diameter** of the equalizing beam center bore on a new ULTIMAAX equalizing beam is 3.886" ± 0.003" (98.7 mm ± 0.1 mm), calculate the mean of any two measurements 90° apart in the same plane, see Figure 8-22. If the mean is **NOT** within the specified range, replacement of the equalizing beam is required.

NOTE Always use the bushing outer metal for pressing operations. Pressing on the bushings inner metal may damage the bushing and require bushing replacement.

FIGURE 8-22

Inside diameter of the equalizing beam center bore on a new ULTIMAAX equalizing beam is **3.886" ± 0.003"** (98.7 mm ± 0.1 mm)

FIGURE 8-23

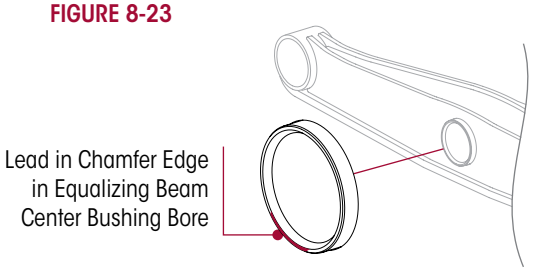

ASSEMBLY

1. The equalizing beam bore may have a more substantial lead in chamfer at one end of the bore than the other, see Figure 8-23. Take advantage of the larger chamfer by pressing in the new bushing from this end.
2. Place the equalizing beam in a shop press on the receiving tool or press. Support the beam squarely at the center bore area to avoid distortion of the beam bore or bending of the beam.
3. Lubricate the equalizing beam bore and the equalizing beam center bushing outer metal sleeve with an NLGI#2 – EP (Extreme Pressure) grease, see Figure 8-24.

FIGURE 8-24

NOTE The ULTIMAAX center bushing has voids that must be positioned horizontally front and back, see Figure 8-25.

NOTE The center bushing must be square with the equalizing beam hub before pressing the center bushing into the beam. Center bushings pressed in at an angle will damage the center bushing and the equalizing beam, see Figure 8-26.

FIGURE 8-25

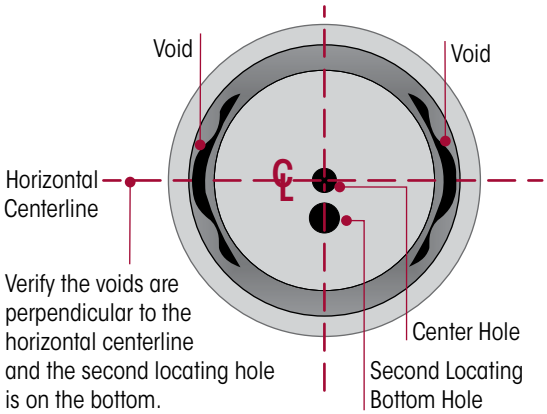

FIGURE 8-26

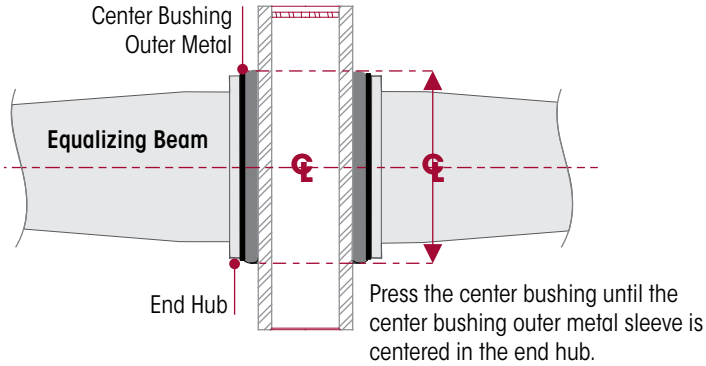

CAUTION ALWAYS USE THE CENTER BUSHING OUTER METAL FOR PRESSING OPERATIONS. PRESSING ON THE CENTER BUSHING'S INNER METAL WILL CAUSE DAMAGE TO THE CENTER BUSHING AND REQUIRE CENTER BUSHING REPLACEMENT.

4. Install the center bushing installation tool, Part no. 66086-107, making sure the voids are positioned horizontally front and back and press in the new center bushing until the outer metal sleeve is centered in the equalizing beam bore, see Figures 8-25 through 8-28.
5. Install the equalizing beam assembly to the vehicle. Follow the equalizing beam installation procedure in this section.

FIGURE 8-27

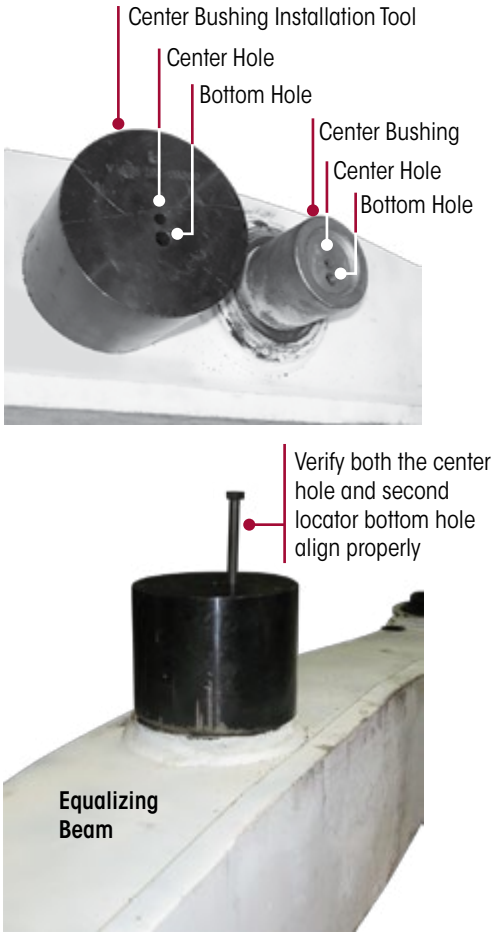

FIGURE 8-28

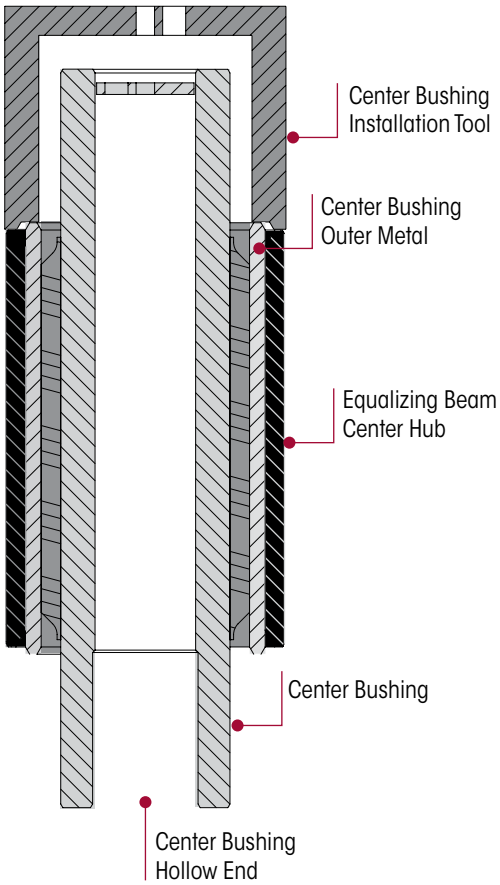

EQUALIZING BEAM END BUSHINGS

Bar Pin Style

You will need:

- A shop press with a capacity of at least 100 tons
- End bushing service kit, refer to the Parts List Section of this publication.
- End bushing tools – Receiving Tool No. 66086-111, Installation Tool No. 66086-106 and Removal Tool No. 66086-109, see Special Tools Section of this publication.

DISASSEMBLY

WARNING WHEN REMOVING AND INSTALLING BUSHINGS IN THE EQUALIZING BEAMS, FOLLOW THE PROCEDURES OUTLINED IN THIS PUBLICATION. DO NOT USE A CUTTING TORCH TO REMOVE THE BUSHING OUTER METALS PRESSED IN THE BEAM BORES OR FASTENERS. WELDING, TORCHING OR ATTACHING MATERIAL TO THE EQUALIZING BEAM MUST NEVER BE PERFORMED. THE USE OF HEAT CAN ADVERSELY AFFECT THE STRENGTH OF THE EQUALIZING BEAMS AND CAN CAUSE DAMAGE TO THE EQUALIZING BEAM ASSEMBLY, ADVERSE VEHICLE HANDLING AND POSSIBLE PERSONAL INJURY OR PROPERTY DAMAGE.

WARNING DISCARD USED FASTENERS. ALWAYS USE NEW FASTENERS TO COMPLETE A REPAIR. FAILURE TO DO SO COULD RESULT IN FAILURE OF THE PART OR MATING PARTS, ADVERSE VEHICLE HANDLING, PERSONAL INJURY, OR PROPERTY DAMAGE.

NOTE Hendrickson recommends the use of Grade 8 bolts, hardened washers, and Class C locknuts. Hardened washers are not necessary when flange head fasteners are used.

NOTE Whenever an equalizing beam is removed for repair or inspection of the equalizing beam end connection reveals movement, measure the distance between the axle bracket legs for correct width. Refer to Axle Bracket in Preventive Maintenance Section of this publication for measurement location and dimensions. An axle bracket outside of the measurement range must be repaired or replaced. Consult the vehicle manufacturer for inspection, component repair and replacement instructions.

1. Remove equalizing beam assembly from vehicle as detailed in the equalizing beam disassembly instructions in this section.
2. Place the equalizing beam in the shop press with the beam end hub squarely supported on the receiving tool (Part No. 66086-111) or press bed.
3. Prior to removal, mark the orientation of the bar pin flats on the equalizing beam with a paint stick, see Figure 8-29.
4. Support the beam end hub with it centered on the receiving tool. Be sure the equalizing beam is squarely supported on the press bed for safety.
5. Press on the end bushing inner metal, see Figure 8-29, of the end bushing until the inner metal is flush with the top of the equalizing beam end hub. This will move the bushing rubber away from the outer metal of the bushing so the removal tool (Part No. 66086-109) can be installed.
6. Center the bushing removal tool directly on the bushing's outer metal and press the bushing out of the equalizing beam end hub.

FIGURE 8-29

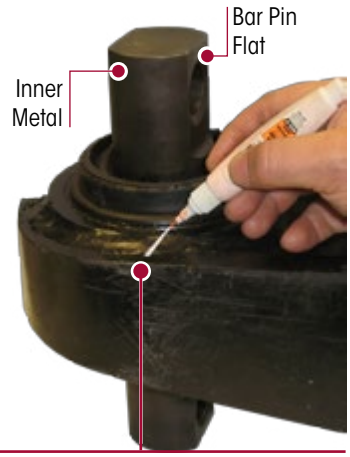

Mark the location of the bar pin flats with a paint stick on the equalizing beam end hub

INSPECTION

After removing the bar pin end bushings, thoroughly inspect the beam bores. If the equalizing beam is damaged from end bushing removal, replacement of the equalizing beam is required, replace with a new equalizing beam. **DO NOT** attempt re-bush or use an equalizing beam that has been damaged.

WARNING

FAILURE TO REPLACE AN EQUALIZING BEAM THAT HAS BEEN DAMAGED FROM BUSHING REMOVAL CAN RESULT IN THE FAILURE OF THAT BEAM, ADVERSE VEHICLE HANDLING AND POSSIBLE PERSONAL INJURY OR PROPERTY DAMAGE.

1. Clean the bores of the equalizing beams with emery cloth or ball hone, removing any nicks or metal buildup from bushing removal.
2. Measure the equalizing beam end hub bore inner diameter. The Hendrickson specification for the equalizing beam end hub bore diameter is 4.621" ± 0.004" (117.38 mm ± 0.10 mm), and is taken as the mean of any two readings 90° apart in the same plane, see Figure 8-30. If it is **NOT** within the specified range, replacement is required.

FIGURE 8-30
Equalizing Beam End Hub Bore Diameter

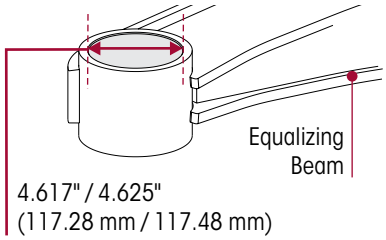

ASSEMBLY

NOTE Always use the bushing outer metal for pressing operations. Pressing on the bushings inner metal may damage the bushing and require bushing replacement.

1. The equalizing beam bore may have a more substantial lead in chamfer at one end of the bore than the other. Take advantage of the larger chamfer by pressing in the new end bushing from this end.
2. Lubricate the equalizing beam end hub inside bore and the bar pin end bushing outer sleeve with a NLGI #2 – EP (Extreme Pressure) grease.
3. Place the equalizing beam in a shop press with the end hub, squarely supported on the receiving tool, see Figure 8-31.
4. Position and align the end bushing to the mark made before removal as shown in Figure 8-29.

FIGURE 8-31

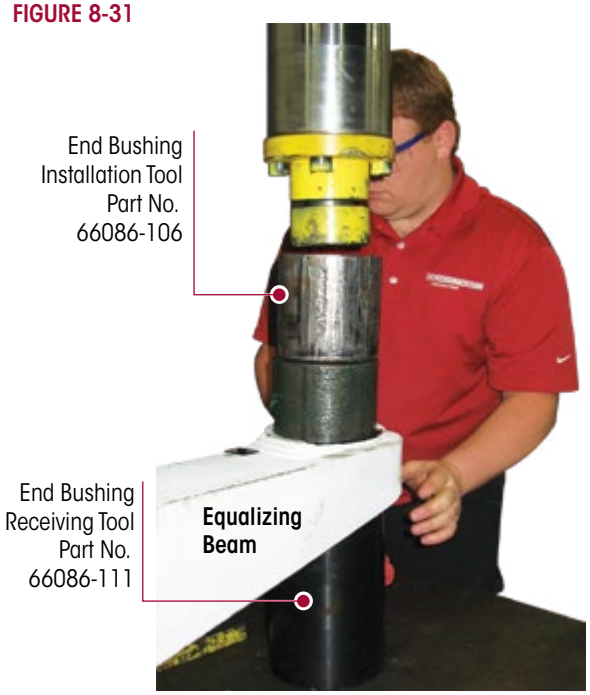

NOTE The end bushing must be square with the equalizing beam end hub before pressing the end bushing into the beam. End bushings pressed in at an angle will damage the end bushing and the equalizing beam.

CAUTION

CARE MUST BE TAKEN DURING THE INSTALLATION OF THE BUSHING. DO NOT PUSH ON THE INNER METAL OF THE BUSHING, DOING SO WILL CAUSE DAMAGE TO THE BUSHING AND VOID WARRANTY.

NOTE Always use the bushing outer metal for pressing operations. Pressing on the bushings inner metal may damage the bushing and require bushing replacement.

5. Place the end bushing installation tool on the end hub.

6. The through hole in the tool can help align the bar pin flats due to lack of visibility. Place a bolt with enough length to go through the tool and the bar pin hole, see Figure 8-32.
7. With the tools align, press in the end bushing, see Figure 8-31.
8. The end bushing must be centered within the hub of the equalizing beam, see Figure 8-33.
9. Install the equalizing beam assembly into vehicle as detailed in equalizing beam assembly in this section.

FIGURE 8-32

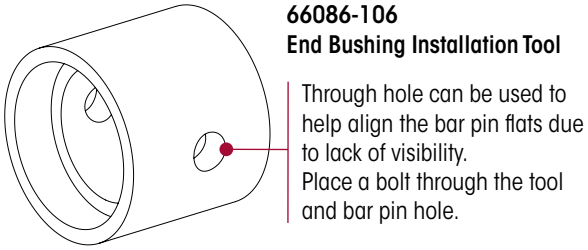

FIGURE 8-33

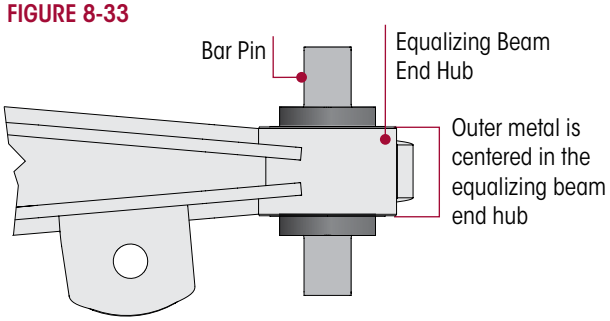

FIGURE 8-34

Adapter Style

YOU WILL NEED:

- A shop press with a capacity of at least 100 tons
- Air hammer / chisel / Bent chisel, see Figure 8-34
- Hendrickson Tool No. 66086-101 (OTC Part No. 1763), see Special Tools Section of this publication

DISASSEMBLY

NOTE It is recommended that a penetrating oil be applied to all beam end connections.

1. Remove the cotter pins, slotted nuts and end bushing adapter tube, see Figure 8-35.
2. The beam end adapters have two chisel recesses located in their flanges as shown in Figure 8-36.
3. Locate the recess for the chisel, rotate the adapter if necessary. Place the air hammer/chisel in the recess.
4. If the adapter does not turn, use a hammer to rap the outside of the axle bracket legs around the adapter area and repeat with the air hammer chisel.
5. Support the end of the equalizing beam as it may drop when the other adapter is removed.
6. Remove remaining adapters.

FIGURE 8-35
ULTIMAAX 63K Shown

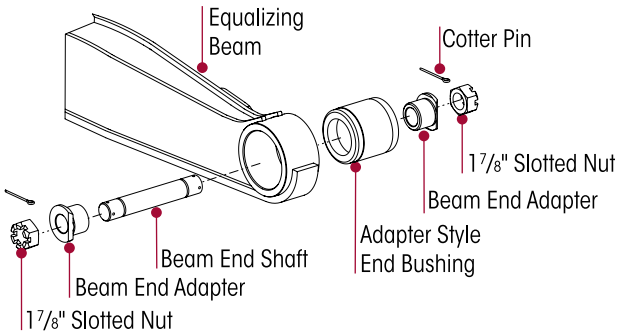

FIGURE 8-36

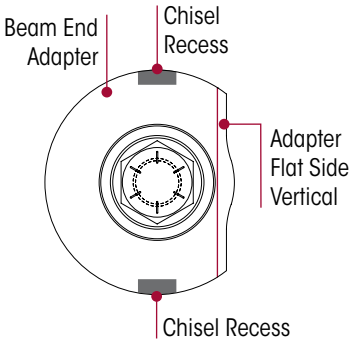

7. When the adapter has enough clearance between the axle bracket and the adapter flange, use a bent chisel as shown in Figure 8-34 to wedge and force the adapter out.

WARNING THE ADAPTER REMOVAL PROCESS CAN CAUSE DAMAGE. REUSE OF DAMAGED OR WORN ADAPTERS COULD RESULT IN A COMPONENT FAILURE LEADING TO ADVERSE VEHICLE HANDLING AND POSSIBLE PERSONAL INJURY.

NOTE Due to the process necessary to remove the adapters, the adapter can be subjected to damage. **DO NOT** reuse worn or damaged adapters. Replace as necessary.

8. Remove the equalizing beam assembly from vehicle as detailed in the Equalizing Beam Disassembly instructions in this section.
9. Position the equalizing beam in the shop press and align the End Bushing Removal / Replacement Adapter with the tapered end facing the bushing to be removed, see Figure 8-37.

WARNING CHECK TO INSURE PROPER ALIGNMENT OF TOOLING ADAPTERS WITH EQUALIZING BEAM COMPONENTS BEFORE APPLYING FULL HYDRAULIC PRESSURE WITH A SHOP PRESS.

10. Apply hydraulic force and push out the old bushing.

FIGURE 8-37

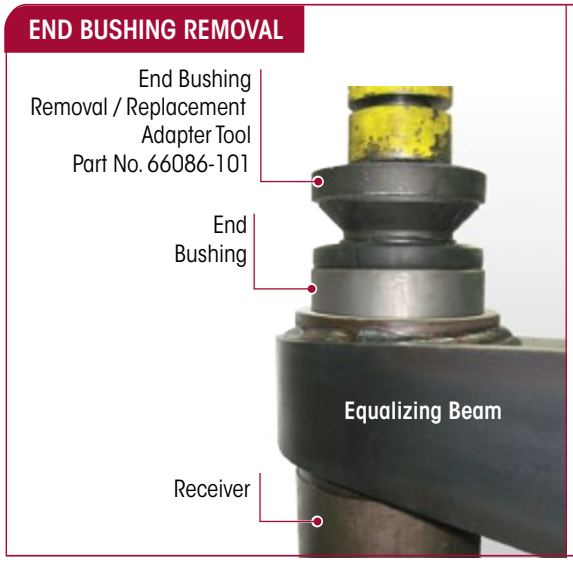

FIGURE 8-38

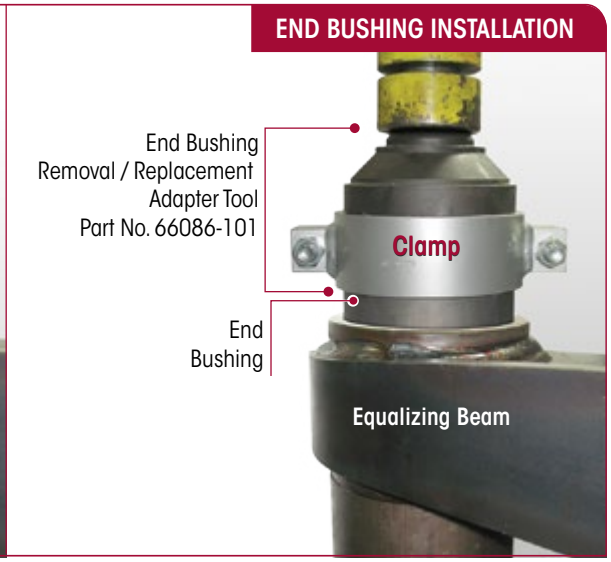

ASSEMBLY

1. Clean the end bushing bore with a cylinder ball hone or emery paper. Clean any debris.
2. Lubricate the equalizing beam bore and the equalizing beam center bushing outer metal sleeve with an NLGI#2 – EP (Extreme Pressure) grease, see Figure 8-39.
3. Position the end bushing removal / replacement adapter, with the tapered end facing away from the new bushing, onto the clamp, see Figure 8-38.
4. Wrench tighten the clamp onto the bushing and the adapter as shown in Figure 8-38.

FIGURE 8-39

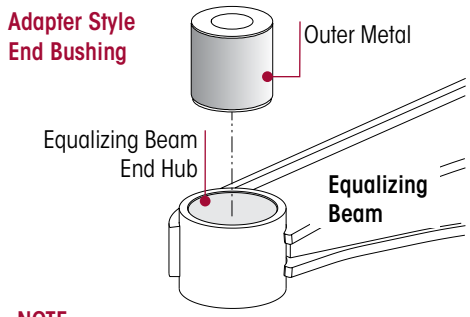

NOTE
Lubricate the inside diameter of **END HUB** and the end bushing **OUTER METAL** with NLGI#2-EP (Extreme Pressure) lithium base grease

WARNING ENSURE PROPER ALIGNMENT OF TOOLING ADAPTERS WITH EQUALIZING BEAM COMPONENTS BEFORE APPLYING FULL HYDRAULIC PRESSURE WITH A SHOP PRESS.

5. Apply hydraulic force and press the new bushing into place. The bushing will be completely seated when the clamp makes contact with the beam face.
6. Install one adapter through the axle bracket leg at the wheel side, into the beam end bushing, see Figure 8-40.

FIGURE 8-40

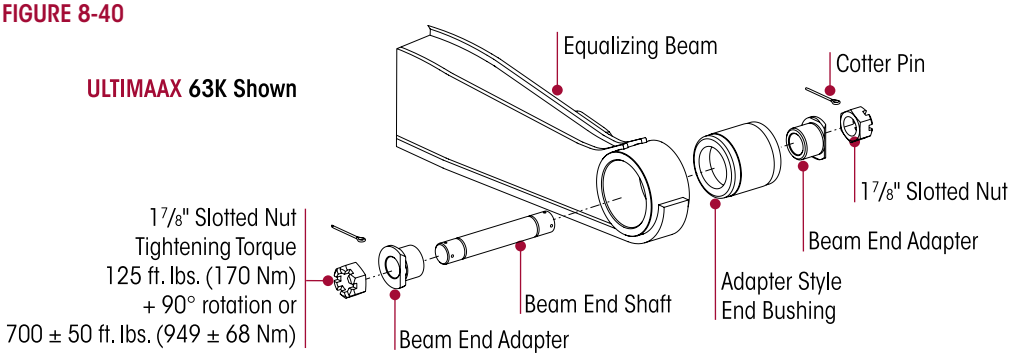

7. Install the other adapter through the axle bracket leg at the axle side, taking advantage of the cut-off flange on the adapter to clear the axle.
8. Insert adapter connections, see Figure 8-41.
9. Rotate the adapters so the adapter cut off flats are vertical as shown in Figure 8-41.

FIGURE 8-41

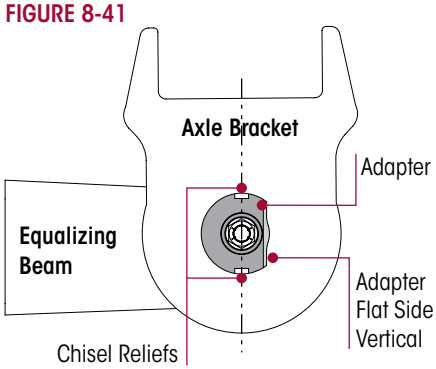

NOTE Axles must be in operational position before fasteners are tightened to prevent pre-loading of the rubber bushing.

10. Assemble one slotted nut to the shaft and install the cotter pin. Place a suitable wrench on the nut and ensure the wrench is locked in place (braced) to prevent movement. Tighten using one of the following torque procedure.

TORQUE PROCEDURE

WARNING IF THE RECOMMENDED TORQUE VALUE IS NOT PROPERLY MAINTAINED, THE METAL SURFACES OF THE AXLE BRACKET LEGS, HOLES, ADAPTERS AND RUBBER BUSHING INNER METALS CAN EXPERIENCE EXCESSIVE WEAR AND/OR FAILURE. THIS CAN CAUSE SEPARATION OF COMPONENTS AND ADVERSE VEHICLE HANDLING, PROPERTY DAMAGE OR PERSONAL INJURY.

A simple torque wrench will not be sufficient to obtain the proper torque requirement. The proper torque requirement can be obtained with the use of a torque multiplier. If one is not available the use of a slug wrench is recommended.

METHOD A: TORQUE MULTIPLIER

You will need:

- Torque Multiplier
  a. Assemble the opposite nut and use a torque wrench with multiplier.
  b. Tighten the nut to torque multiplier value 700 ± 50 Foot Pounds torque, see Table 1.

CAUTION DO NOT BACK OFF NUT TO INSTALL COTTER PIN, DOING SO MAY REDUCE THE TIGHTENING TORQUE BELOW THE REQUIRED SPECIFICATION.

c. Install cotter pin. The nut may be advanced to the next nut slot. **DO NOT** back off nut.

METHOD B: SLUG WRENCH

You will need:

- Two slug wrenches (see Figure 8-42)
- 4 pound hammer

FIGURE 8-42

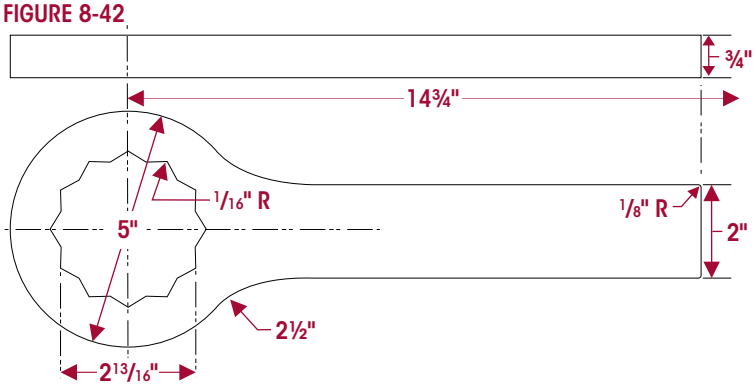

Min. Hex 12 Point

TABLE 1

TORQUE SPECIFICATIONS			
SLUG WRENCH METHOD			TORQUE MULTIPLIER
125 Foot Pounds	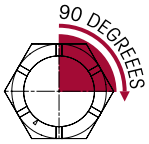	¼ or 90º turn on castle nut	700 ± 50 Foot Pounds

a. Assemble the opposite nut and using a torque wrench, tighten the nut to the initial torque value shown in Table 1.

b. Remove torque wrench and replace with the Slug Wrench. Using a four pound hammer, tighten the assembly by hitting the slug wrench near the handle as shown in Figure 8-43 until the nut has been turned to the degrees specified in Table 1.

FIGURE 8-43

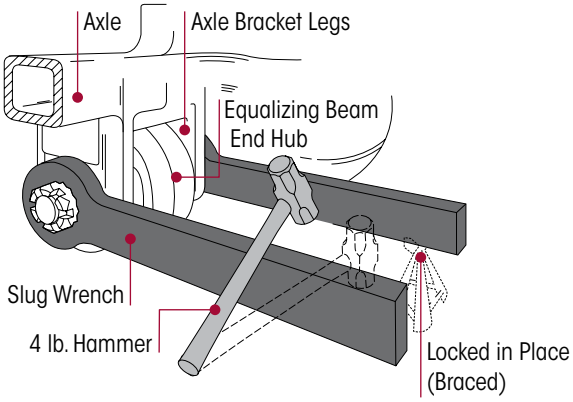

CAUTION DO NOT BACK OFF NUT TO INSTALL COTTER PIN, DOING SO MAY REDUCE THE TIGHTENING TORQUE BELOW THE REQUIRED SPECIFICATION.

CAUTION REPEATED HAMMERING BEYOND THE DEGREE SPECIFIED CAN CAUSE COMPONENT DAMAGE.

c. Install cotter pin. The nut may be advanced to the next nut slot, **DO NOT** back off nut.

WARNING INSUFFICIENT TIGHTENING TORQUES CAN CAUSE PREMATURE WEAR AND DAMAGE TO THE AXLE BRACKET LEGS, HOLES AND/OR BEAM END CONNECTION COMPONENTS, THIS CAN FURTHER CAUSE FAILURE AND SEPARATION OF COMPONENTS, AND RESULT IN ADVERSE VEHICLE HANDLING, SEVERE PERSONAL INJURY OR DEATH. MAINTAIN PROPER TIGHTENING TORQUES AT ALL TIMES.

CROSS TUBE

A cross tube seldom requires replacement, usually only when it has been bent, possibly due to hitting an object. A bent cross tube may cause misalignment of the axles, and must be replaced immediately to eliminate abnormal tire wear.

Method A Equalizing Beam Removal Method - Follow the steps in the Equalizing Beam Component Replacement procedure in this section.

Within the procedure, after removal of the equalizing beams when the equalizing beams are separated, remove and replace cross tube.

Method B Center Bushing End Plug Removal

You will need:

- Cross Tube Service Kit 60961-759 (see Parts Lists Section)
- Cutting Torch
- Welding Equipment
- Hole Saw

DISASSEMBLY

1. Use a work bay with a level on a flat surface.
2. Chock the front steer axle wheels.

CAUTION

FOLLOW THE SAFETY GUIDELINES FOR OPERATING THE TORCH. USE CAUTION AS PARTS MAY BE HOT.

3. Using a cutting torch, make two cuts in the cross tube, see Figure 8-44.
4. Remove the cut section of the cross tube, slide each remaining section of the cross tube and discard.
5. Use a 2" hole saw and remove only one center bushing end plug from the suspension.

FIGURE 8-44
ULTIMAAX 63K Shown

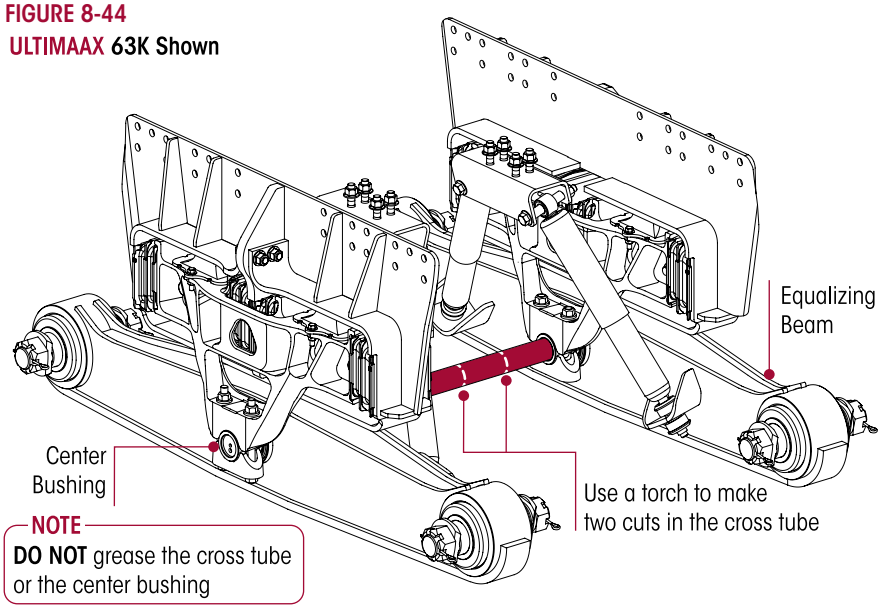

ASSEMBLY

1. Clean the open end of the center bushing bore to approximately 1" depth of weld and debris.
2. From the open center bushing slide the new cross tube into both center bushings.
3. It may be necessary to use a floor jack under one or both equalizing beams to align the cross tube.

FIGURE 8-45

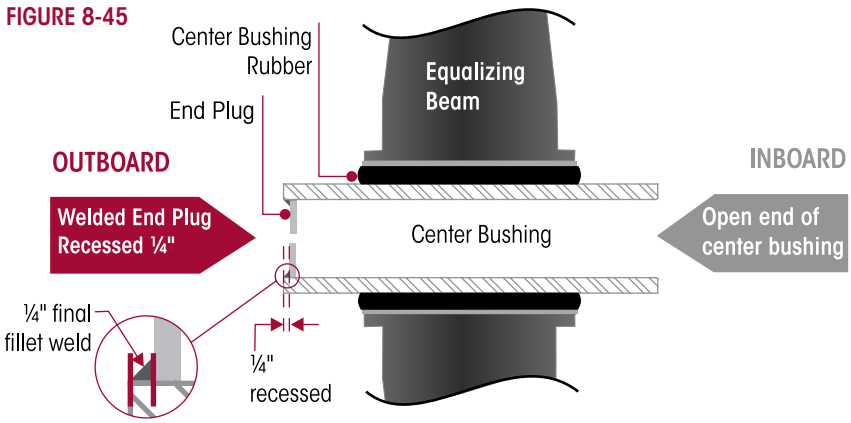

4. Position the end plug ¼" recessed in the center bushings and tack weld, see Figure 8-45.
5. Check end plug position, final weld shall be a ¼" fillet, see Figure 8-45.

TORQUE RODS

WARNING

THE ULTIMAAX SUSPENSION INCORPORATES BOTH LONGINTUDINAL AND TRANSVERSE TORQUE RODS FOR VEHICLE STABILITY. IF THESE COMPONENTS ARE DISCONNECTED OR ARE NON-FUNCTIONAL THE VEHICLE SHOULD NOT BE OPERATED. FAILURE TO DO SO CAN RESULT IN ADVERSE VEHICLE HANDLING AND POSSIBLE TIRE CONTACT WITH THE FRAME OR THE SUSPENSION.

FIGURE 8-46

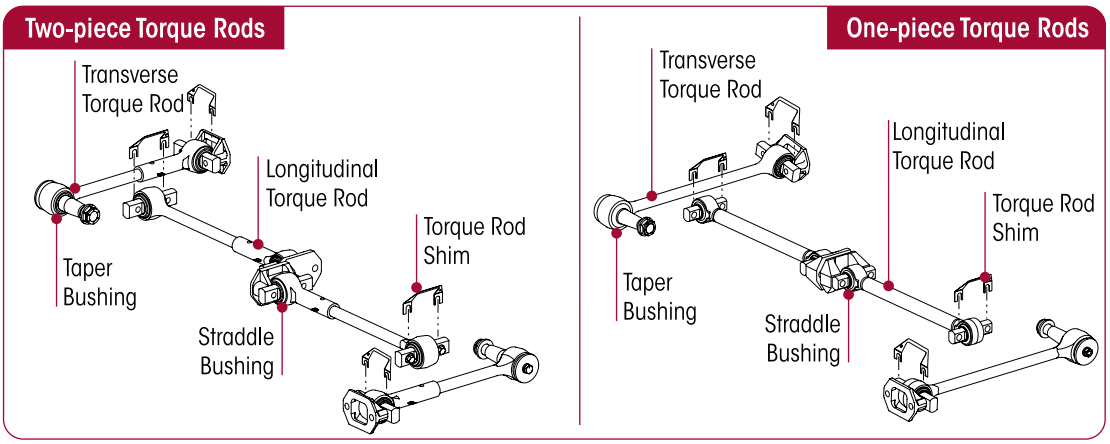

■ LONGITUDINAL TORQUE RODS

DISASSEMBLY

1. Chock the front wheels of the vehicle.

SERVICE HINT To remove all the load from the longitudinal torque rod, raise or lower the pinion as needed. This will ease the removal of the longitudinal torque rod.

2. Support the pinion on the axle being serviced.

NOTE Prior to disassembly of the longitudinal torque rod, note the quantity and orientation of the longitudinal torque rod shims. It is required that the longitudinal torque rod shims are installed in the same orientation and location as removed to preserve the existing alignment, see Figure 8-46.

3. Remove the torque rod mounting fasteners and shims (if equipped).
4. Remove the fasteners that connect the longitudinal torque rod to the cross member and axle brackets.
5. Remove longitudinal torque rod, see Figure 8-46.

ASSEMBLY

1. Install longitudinal torque rod.
2. Install the fasteners and any shims that were removed to the cross member and axle brackets.

NOTE Hendrickson recommends the use of Grade 8 bolts and Grade C locknuts. If flange head bolts and locknuts are not used then hardened structural washers must be used under bolt heads and locknuts.

3. Tighten all fasteners to vehicle manufacturer's torque specifications.
4. Verify proper pinion angle, and correct with drop in shims between the torque rod bar pin and the cross member or axle bracket depending on the direction of adjustment needed. Contact the vehicle manufacturer for proper pinion angle specifications.
5. Remove wheel chocks.

■ TRANSVERSE TORQUE RODS

DISASSEMBLY

1. Chock the front wheels of the vehicle.

SERVICE HINT Note the quantity and location of shims removed to maintain the lateral alignment of the axle during assembly. See Alignment & Adjustments Section of this publication.

2. Remove the torque rod mounting fasteners.
3. Remove the transverse torque rod, see Figure 8-46.
4. Inspect the mounting surfaces for any wear or damage. Repair or replace as necessary.

ASSEMBLY

1. Install the transverse torque rod.
2. Install the mounting fasteners and any shims that were removed.

NOTE Hendrickson recommends the using Grade 8 bolts and Grade C locknuts for all torque rod attachments.

3. Prior to tightening, ensure that the vehicle is at the proper ride height. Tighten all fasteners to the required torque specification. Refer to original equipment manufacturer for specifications.
4. Check the lateral alignment. If not within vehicle manufacturer's specified range, a lateral alignment is necessary. See Lateral Alignment in the Alignment & Adjustments Section of this publication.
5. Remove the wheel chocks.

TORQUE ROD BUSHINGS

■ ULTRA ROD PLUS, see Figure 8-47

You will need:

- A vertical press with a capacity of at least 10 tons
- Shop made receiving tool and installation/removal tool, refer to the Special Tools Selection of this publication for more information
- Funnel Tool No. 66086-000, refer to the Special Tools Selection of this publication for more information

FIGURE 8-47

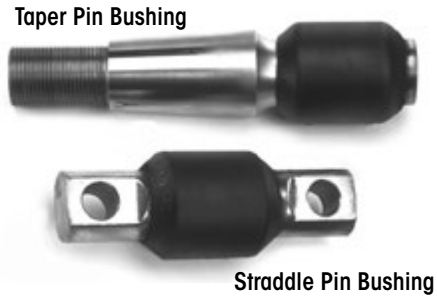

DISASSEMBLY

1. Remove torque rods as detailed in Torque Rod Disassembly instructions in this section.

WARNING

DO NOT USE HEAT OR USE A CUTTING TORCH TO REMOVE THE BUSHINGS FROM THE TORQUE ROD. THE USE OF HEAT WILL ADVERSELY AFFECT THE STRENGTH OF THE TORQUE ROD, HEAT CAN CHANGE THE MATERIAL PROPERTIES. A COMPONENT DAMAGED IN THIS MANNER CAN RESULT IN ADVERSE VEHICLE HANDLING AND POSSIBLE PERSONAL INJURY OR PROPERTY DAMAGE.

2. Support the torque rod end tube centered on the receiving tool. Be sure the torque rod is squarely supported on the press bed for safety.
3. Push directly on the straddle mount bar pin, until the top of the pin is level with the top of torque rod end tube. Place the push out tool directly on top of the bar pin and press until the bushing clears the torque rod end tube.
4. Remove the fasteners from the tapered bar pin bushing, and support the torque rod end on the receiving tool with the tapered stud pointing up and the end tube centered on the tool. Be sure the torque rod is squarely supported on the press bed for safety.
5. Push directly on the tapered stud until the bushing clears the torque rod end tube.

ASSEMBLY

1. Clean and inspect the inner diameter of the torque rod end tubes.

NOTE

DO NOT use paraffinic oil, or soap base lubricant. Such lubricants can cause adverse reactions with the bushing, such as deterioration of the rubber, causing premature failure. Use **ONLY** a light Naphthenic base oil, such as 60 SUS at 100°F.

FIGURE 8-48

2. Lubricate the inner diameter of the torque rod end tubes and the new rubber bushings with a light Naphthenic base oil, such as 60 SUS at 100°F, see Figure 8-48.
3. Support the torque rod end tube centered on the receiving tool. Ensure the torque rod is squarely supported on the press bed for safety.
4. Place the assembly funnel tool centered on the torque rod end hub, see Figure 8-50.
5. Place the torque rod bushing centered in the assembly funnel.
6. The straddle mount bar pin bushings must have the mounting flats positioned at zero degrees to the shank of the torque rod, see Figure 8-49.

FIGURE 8-49

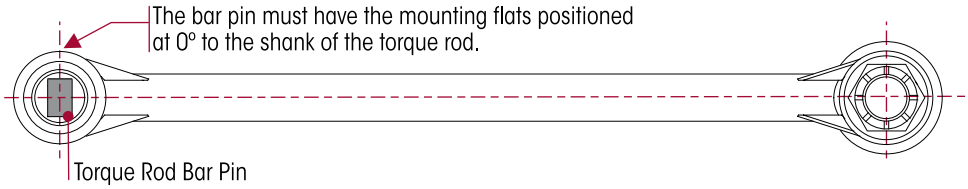

7. Press the bar pin through the assembly funnel into torque rod end hub until the rubber clears the assembly funnel, see Figure 8-51.
8. Push directly on the straddle mount bar pin, or the tapered stud. The bushing must be centered within the end hubs of the torque rod.
   - When pushing in the new rubber bushings, overshoot the desired final position by approximately 3/16" (4.76 mm), see Figure 8-52.

- Push the rubber bushing again from the opposite side to center the rubber bushing within the end hub, see Figure 8-53.

FIGURE 8-50

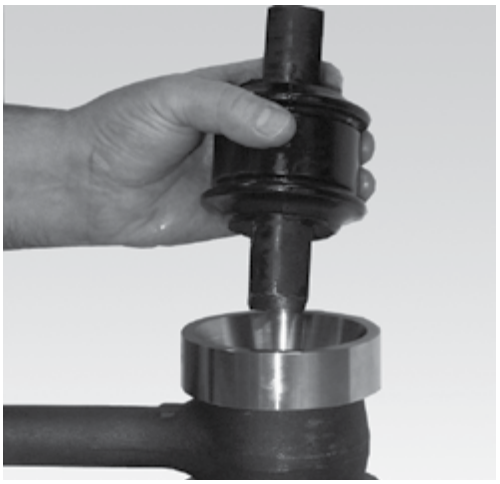

FIGURE 8-51

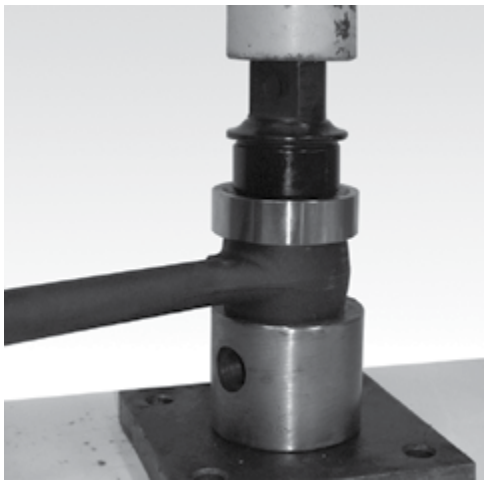

FIGURE 8-52

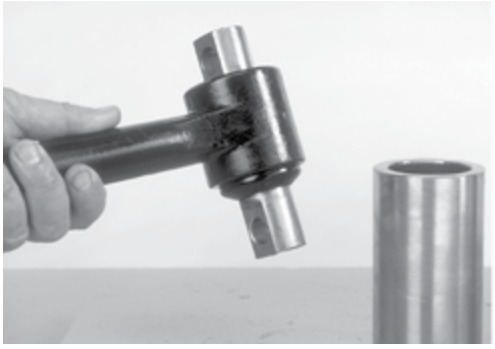

FIGURE 8-53

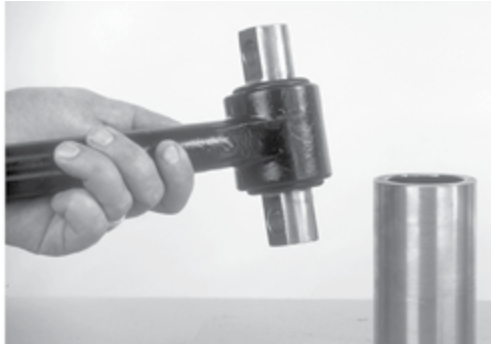

CAUTION

IF THE TORQUE ROD ASSEMBLY IS NOT ALLOWED THE ALLOTTED TIME FOR THE LUBRICANT TO DISSIPATE, THE BUSHING MAY SLIDE FROM THE TORQUE ROD END HUB CAUSING THE BUSHING TO BE REMOVED AND A NEW BUSHING RE-INSTALLED.

9. Wipe off the excess lubricant. Allow the lubricant four hours to dissipate prior to operating the vehicle.
10. Install the torque rod as detailed in the Torque Rod Assembly instructions in this section.

FIGURE 8-54

- **XTRB,** see Figure 8-54

You Will Need:

- A vertical press with a capacity of at least 10 tons
- Shop made receiving tool and installation / removal tool, refer to the Special Tools Section of this publication for more information.

BUSHING REMOVAL

1. Remove torque rods as detailed in Torque Rod Disassembly instructions in this section.

WARNING

DO NOT USE HEAT OR USE A CUTTING TORCH TO REMOVE THE BUSHINGS FROM THE TORQUE ROD. THE USE OF HEAT WILL ADVERSELY AFFECT THE STRENGTH OF THE TORQUE ROD, HEAT CAN CHANGE THE MATERIAL PROPERTIES. A COMPONENT DAMAGED IN THIS MANNER CAN RESULT IN THE ADVERSE VEHICLE HANDLING AND POSSIBLE PERSONAL INJURY OR PROPERTY DAMAGE.

2. **Straddle Mount Bar Pin Bushing** —When servicing a straddle mount bar pin bushing assembly, mark the clocking position of the straddle mount bar pin flats with a paint stick on the torque rod end hub prior to disassembly, see Figure 8-55. This marking will serve as a guide when installing the new bushing so the original clocking position can be retained.
3. **Taper Pin Bushing** — Remove the fastener and the concave washer from the taper pin bushing.
4. Support the torque rod end hub and centered on the receiving tool (for a tapered bushing, have the tapered stud pointing down). Ensure the torque rod is squarely supported on the press bed for safety.
5. Install the removal tool, see Figure 8-56.
6. Press directly on the removal tool until the bushing clears the torque rod end hub, see Figure 8-57.

FIGURE 8-55

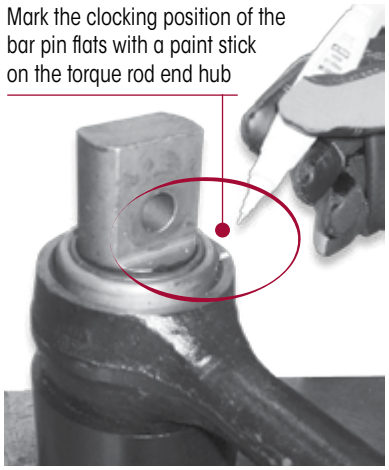

FIGURE 8-56

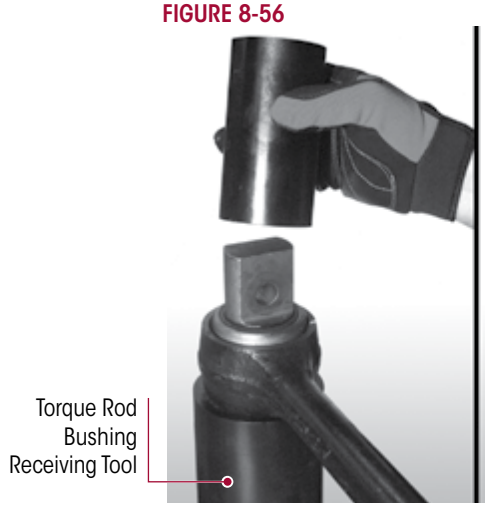

FIGURE 8-57

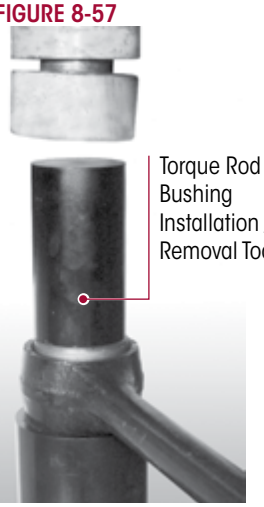

BUSHING INSTALLATION

1. Clean and inspect the inner diameter of the torque rod end hubs, see Figure 8-58.

SERVICE HINT

DO NOT use a paraffinic oil, or soap base lubricant. Such lubricants can cause adverse reactions with the bushing, causing premature failure.

2. Lubricate the inner diameter of the torque rod end hubs and the outer metal of new bushings with NLGI #2 EP grease, see Figure 8-59.

FIGURE 8-58

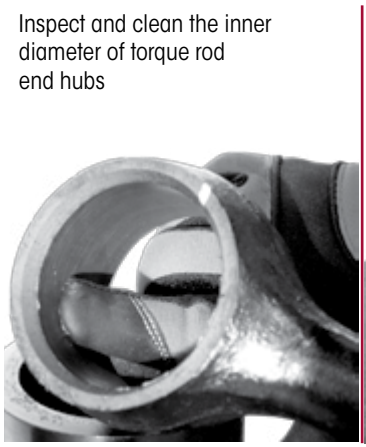

FIGURE 8-59

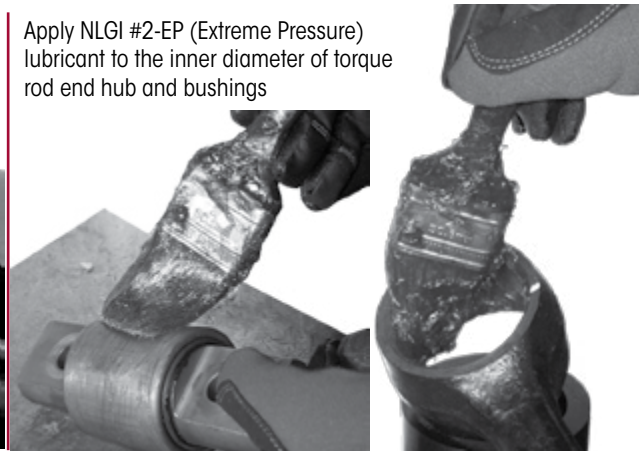

FIGURE 8-60

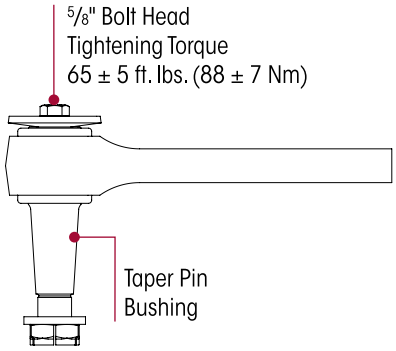

3. Support the torque rod end hub centered on the receiving tool. Ensure the torque rod is squarely supported on the press bed for safety.
4. **Straddle Mount** — Place the straddle mount bushing in the end hub and re-align the bar pin bushings to the mark made prior to removal as shown in Figure 8-55.
5. **Taper Pin** — Place the taper pin bushing in the end hub with the taper pointing down. Tighten 5/8" bolt head to 65 ± 5 torque, see Figure 8-60.
6. Using the shop made tool, place the installation tool on the bushing and press in, see Figure 8-57.
7. Ensure the bushing is centered within the hub of the torque rod.
8. Wipe off the excess lubricant.
9. Replace torque rod assembly as detailed in the Transverse or Longitudinal Torque Rod Component Replacement Section in this publication.

SECTION 9
Troubleshooting Guide

ULTIMAAX for Fire and Rescue Vehicles

TROUBLESHOOTING GUIDE		
CONDITION	**POSSIBLE CAUSE**	**CORRECTION**
Suspension has harsh or bumpy ride	Damaged shock absorber	Replace shock absorbers
	Damaged progressive load spring	Replace progressive load springs, must be replaced in pairs
	Damaged shear spring	Replace shear spring
	Vehicle overloaded	Redistribute or reduce load to correct weight
Vehicle leans	Damaged progressive load spring	Replace progressive load springs, must be replaced in pairs
	Damaged shear spring	Replace shear spring
	Bent cross tube	Replace cross tube
	Weight bias	Redistribute load to correct weight bias
Irregular tire wear	Incorrect axle alignment	Axle alignment is permanently set at the time of vehicle manufacture. Contact vehicle manufacturer.
	Bent cross tube	Replace cross tube
	Damaged, bent, cracked suspension component	Replace damaged component
Loose or missing suspension fasteners	Suspension is overloaded	Reduce and/or redistribute load to correct weight
		Replace and/or properly tighten fasteners to the proper torque specification
	Improper torque or over torque	Increase inspection interval of fasteners
		Replace and/or properly tighten fasteners to the proper torque specification
Frame hanger cracked	Suspension is overloaded	Replace frame hanger assembly
		Reduce and/or redistribute load to correct weight
	Loose or missing suspension fasteners	Replace frame hanger assembly
		Increase inspection interval of fasteners
		Replace fasteners and/or properly tighten fasteners to the proper torque specification
	Damaged frame hanger assembly	Replace frame hanger assembly
Saddle leg to equalizing beam contact	Damaged, bent, worn, or cracked suspension component(s)	Replace damaged component
	Cross tube bent or missing	Replace cross tube
	Loose or worn saddle hex bolts	Replace saddle hex bolts, inspect mating components
	Saddles not center on equalizing beam	Center saddles on the equalizing beam
	Saddles not center on center bushing	Replace center bushing

SECTION 10
Torque Specifications

Hendrickson Recommended Torque Values Provided in Foot Pounds and in Newton Meters

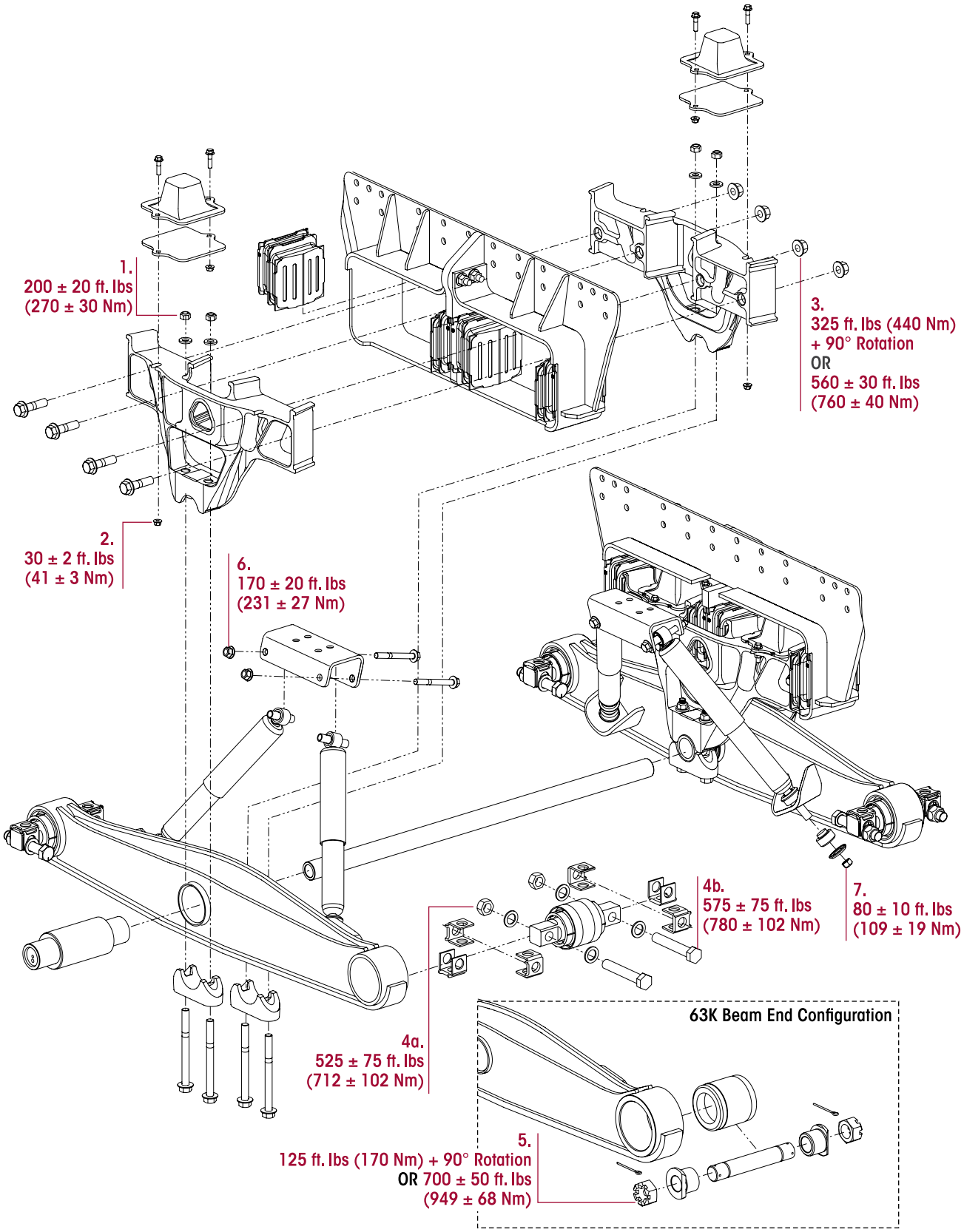

ULTIMAAX for Fire and Rescue Vehicles

HENDRICKSON RECOMMENDED TORQUE SPECIFICATIONS						
NO.	COMPONENT		FASTENER		TORQUE VALUE	
			*QUANTITY	SIZE	FOOT POUNDS	NEWTON METERS
1	Saddle Assembly to Saddle Cap		8	M16	200 ± 20	270 ± 30
2	Saddle Assembly to Progressive Load Spring		8	M10	30 ± 2	41 ± 3
3	Saddle Assembly Halves		8	M20	325 + 90° rotation or 560 ± 30	440 + 90° rotation or 760 ± 40
4a	End Bushing – Bar Pin Style	At Locknut	8	1"	525 ± 75	712 ± 102
4b		At Bolt Head	8	1"	575 ± 75	780 ± 102
5	End Bushing – Adapter Style		4	1⅞"	125 + 90° rotation or 700 ± 50	170 + 90° rotation or 949 ± 68
6	Shock Absorber to Upper Shock Bracket		4	M16	170 ± 20	231 ± 27
7	Shock Absorber to Lower Shock Bracket		4	⅝"	80 ± 10	109 ± 14
8a	Transverse Torque Rod to Axle	At the Locknut	2	1¼"	200 ± 25	271 ± 34
8b		At the Bolt Head	2	⅝"	65 ± 5	88 ± 7

NOTE: * Quantities shown are per suspension.

** Torque values shown in this publication apply only if Hendrickson supplied fasteners are used. If non Hendrickson fasteners are used, follow the torque specification listed in the vehicle manufacturer's service manual.

Hendrickson Recommended Torque Values Provided in Foot Pounds and in Newton Meters

One and Two-piece Torque Rods

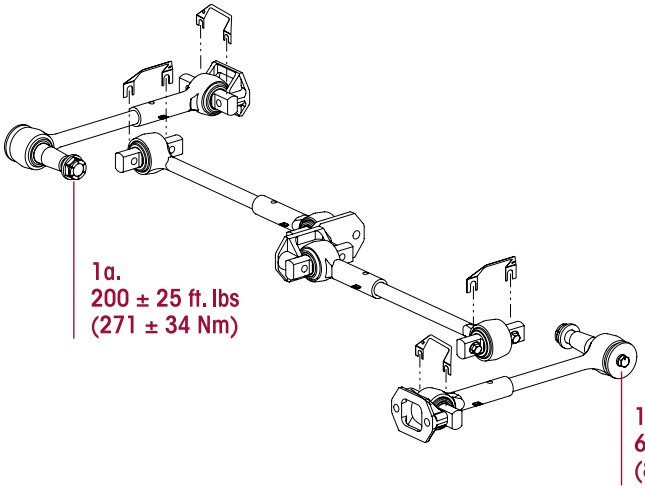

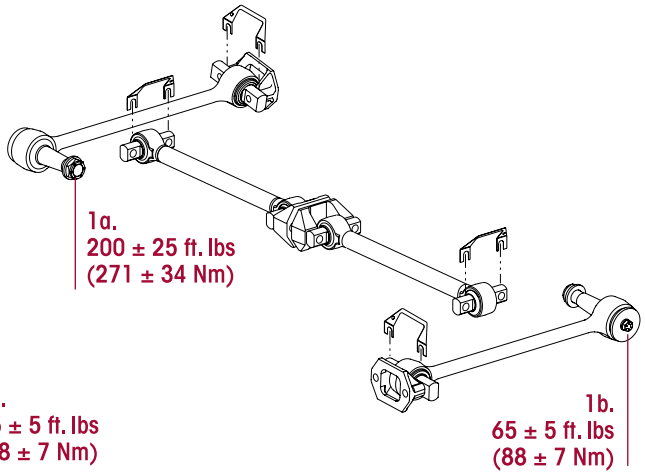

ULTIMAAX for Fire and Rescue Vehicles

HENDRICKSON RECOMMENDED TORQUE SPECIFICATIONS						
NO.	COMPONENT		FASTENER		TORQUE VALUE	
			*QUANTITY	SIZE	FOOT POUNDS	NEWTON METERS
1a	Transverse Torque Rod	At the Locknut	2	1¼"	200 ± 25	271 ± 34
1b		At the Bolt Head	2	⅝"	65 ± 5	88 ± 7

NOTE: * Quantities shown are per suspension.

** Torque values shown in this publication apply only if Hendrickson supplied fasteners are used. If non Hendrickson fasteners are used, follow the torque specification listed in the vehicle manufacturer's service manual.

www.hendrickson-intl.com

HENDRICKSON®

Truck Commercial Vehicle Systems
800 South Frontage Road
Woodridge, IL 60517-4904 USA

1.866.755.5968 (Toll-free U.S. and Canada)
1.630.910.2800 (Outside U.S. and Canada)
Fax 1.630.910.2899

Information contained in this literature was accurate at the time of publication. Product changes may have been made after the copyright date that are not reflected.
© 2016 – 2018 Hendrickson USA, L.L.C. All Rights Reserved

17730-299 Rev B 07-18

Printed in United States of America