MAINTENANCE INFORMATION

MI18-37

DATE :	July 2018	SECTION : 22 HVAC
SUBJECT :	**LANG KK73.1 ELECTROMAGNETIC CLUTCH REMOVAL & INSTALLATION - BITZER A/C COMPRESSOR**	

APPLICATION

Model	
Prevost coaches, from year model 2014, with the Bitzer air conditioning compressor	

DESCRIPTION

In this Maintenance Information, you will find instructions and important details necessary to perform the removal or installation of the Lang KK73.1 electromagnetic clutch, which equips the Bitzer (model 4NFCY) air conditioning compressor.

Note: If not equipped with a Lang KK73.1 electromagnetic clutch, your Bitzer a/c compressor is equipped with a Linnig LA16 clutch. If this is the case, you will find the installation instructions on the document Linnig LA16 Electromagnetic Clutch_142.254 available on the Prevost Technical Publications site, under SUPPLIER PUBLICATIONS.

CONTENT

PROCEDURE 3

LANG KK73 CLUTCH IDENTIFICATION 3

CLUTCH SECTION VIEW 4

REMOVING THE ROTOR 5

REMOVING THE BELTS 5
M12 MOUNTING SCREW REMOVAL 5
EXTRACTOR TOOL 5
PULLING OFF THE ROTOR 6
REMOVING THE COIL 6

MOUNTING THE CLUTCH ON THE COMPRESSOR 7

PREPARATION 7
INSTALLING THE COIL 7
PROPER WOODRUFF KEY POSITION 8
SLIPING THE ROTOR 8
FASTENING THE ROTOR 9

REINSTALLING THE BELTS 10

TROUBLESHOOTING, POSSIBLE DEFECTS, ELIMINATION 11

SUPPLEMENT 13

HOW TO INSTALL A NEW “CLIP-ON” UNLOADER COIL 13

DANGER

Park vehicle safely, apply parking brake, stop the engine. Prior to working on the vehicle, set the ignition switch to the OFF position and trip the main circuit breakers equipped with a trip button. On Commuter type vehicles, set the battery master switch (master cut-out) to the OFF position.

LANG KK73 CLUTCH IDENTIFICATION

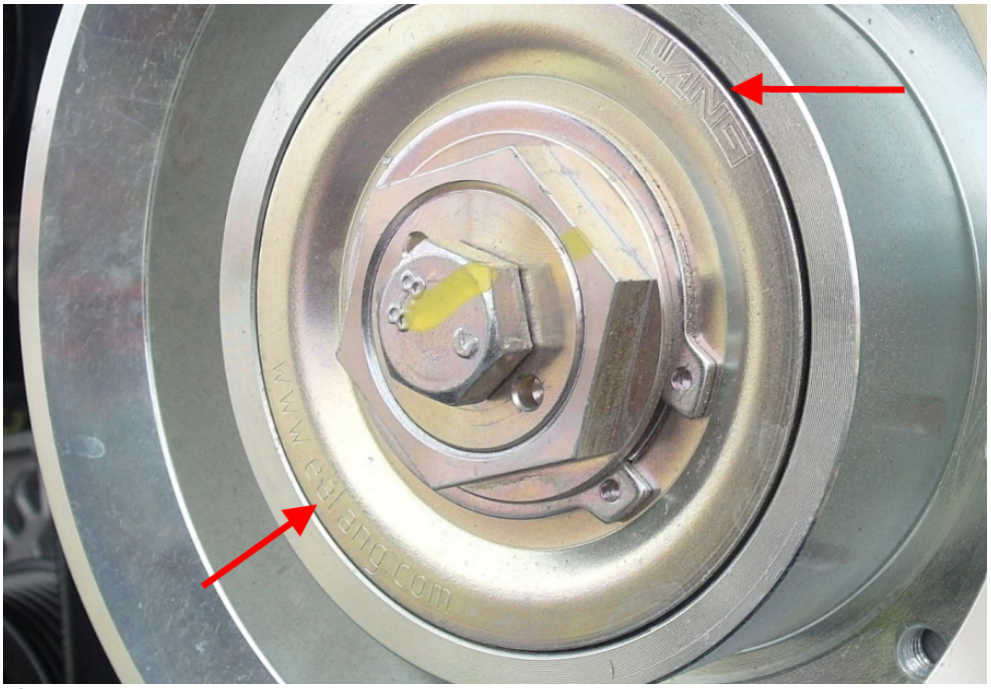

Figure 1: "LANG" & "WWW.EALANG.COM" ENGRAVED ON THE HUB

CLUTCH SECTION VIEW

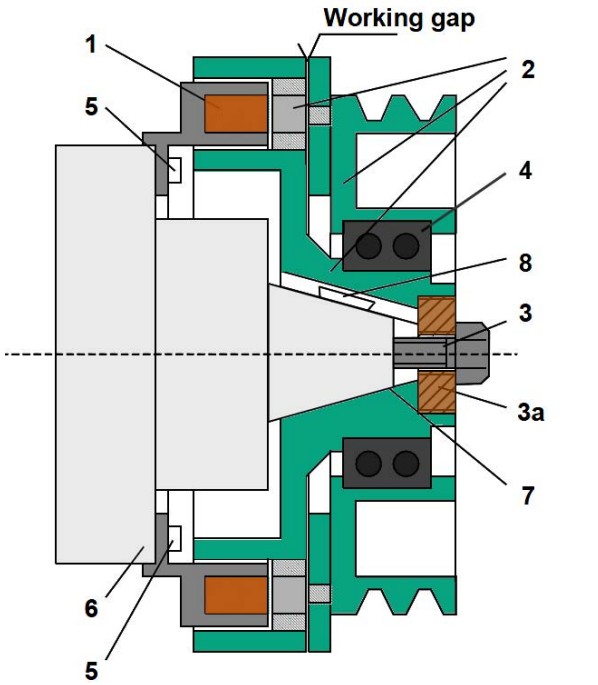

Figure 2: CLUTCH SECTION VIEW

1 - coil
2 - rotor
3 - M12 mounting screw
3a - straining washer
4 - bearing
5 - M8 screw (4x)
6 - flange
7 - shaft end
8 - woodruff key

COLOR CODE

rotor assembly

compressor body

Working gap must be: 0.024 in to 0.035 in
0.60 mm to 0.90 mm

REMOVING THE ROTOR

REMOVING THE BELTS

1) Remove the two drive belts.

to

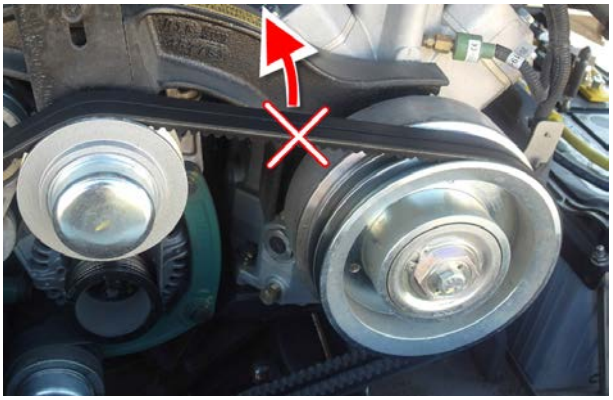

M12 MOUNTING SCREW REMOVAL

2) While holding the hexagonal part of the rotor with a wrench, loosen and remove the M12 mounting screw (3, Figure 2).

EXTRACTOR TOOL

3) Screw extractor tool #680888 in the straining washer (3a, Figure 2).

Do not use a standard M16 screws unless the tip of it has been rounded off, failing to do so may damage the shaft end bore or threads where the M12 screw is fastened

EXTRACTOR TOOL # 680888

PULLING OFF THE ROTOR

4) Pull off the rotor with the extractor tool. Due to the back pressure, the rotor detaches from the shaft end (7, Figure 2) of the compressor.

DO NOT USE AN IMPACT WRENCH

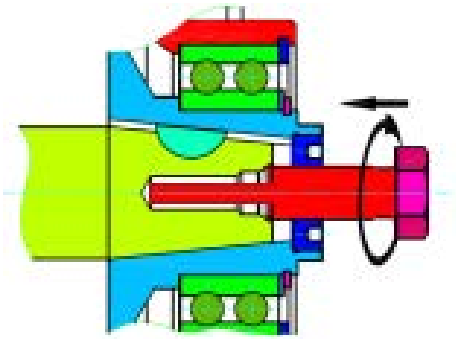

PULL OFF THE ROTOR

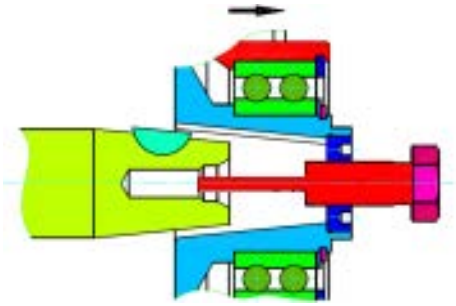

TAKE OFF THE ROTOR

REMOVING THE COIL

5) Loosen the coil M8 fastening screws (5, Figure 2) and pull the coil off the.

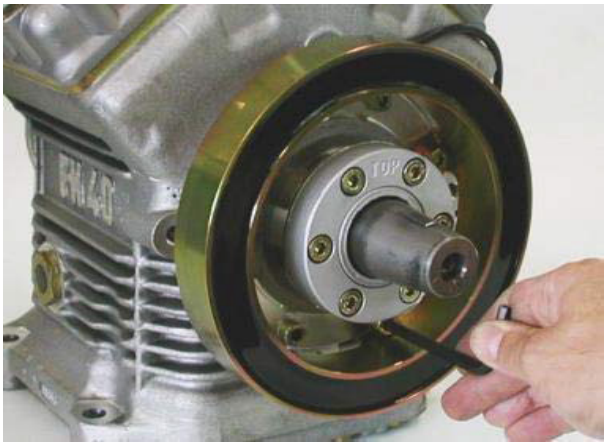

MOUNTING THE CLUTCH ON THE COMPRESSOR

PREPARATION

1) The flange and the shaft end must be free from dirt.

2) Apply high temperature approved assembly grease on the shaft end for easy dismounting of the clutch.

Use of Molykote G-rapid-plus or Molykote P 40 is recommended

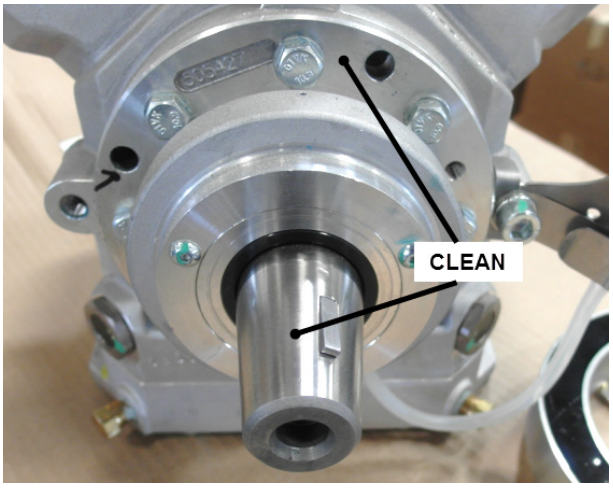

INSTALLING THE COIL

3) Reinstall the coil. Slip the coil on the compressor flange. The cable connector must be positioned on the right side as shown on the image.

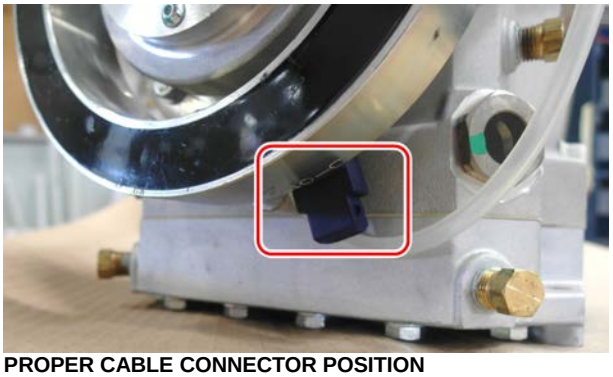

PROPER CABLE CONNECTOR POSITION

4) Fasten the four M8 screws by hand to the compressor and then apply final torque.

Coil mounting screws: 22 lbf-ft (30 N-m). Use blue Loctite 243.

Caution: *Pay attention to the precise seat of the coil. A non-observance may cause the destruction of the clutch components during operation.*

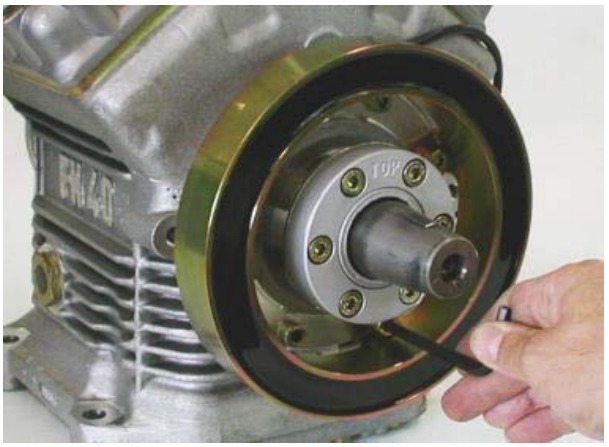

PROPER WOODRUFF KEY POSITION

5) To avoid damaging the rotor bore, make sure that the woodruff key is positioned as shown on the image at right, otherwise, it could move when the rotor is inserted on the shaft end.

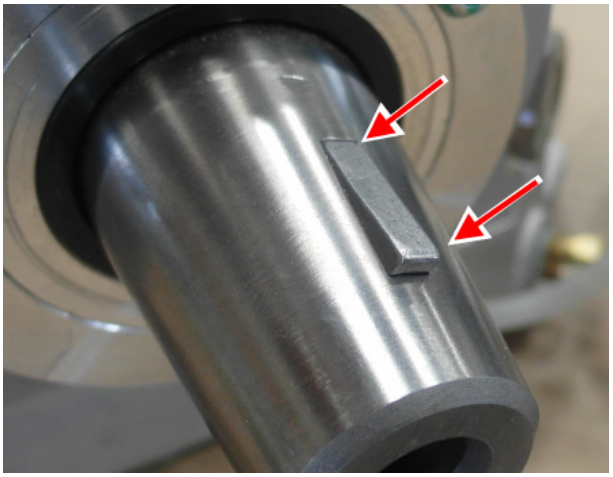

SLIPPING THE ROTOR

6) Carefully mount the rotor on the shaft end by hand.

Never use a hammer for pressing the rotor on.

To avoid damaging the bore of the rotor, feel the engagement of the key in the keyway and slip the rotor on the shaft end of the compressor till reaching the stop.

FASTENING THE ROTOR

7) Fasten the rotor to the shaft end by using the M12 screw and holding-up with a wrench on the hexagonal part of the rotor.

Rotor mounting screw: 60 lbf-ft (81 Nm)

Use blue Loctite 243.

Turn rotor by hand and pay attention to the free run and the generation of noises. In case of rubbing, grinding or similar noises, dismount the rotor and check installation.

8) Once properly tighten, apply a torque seal mark.

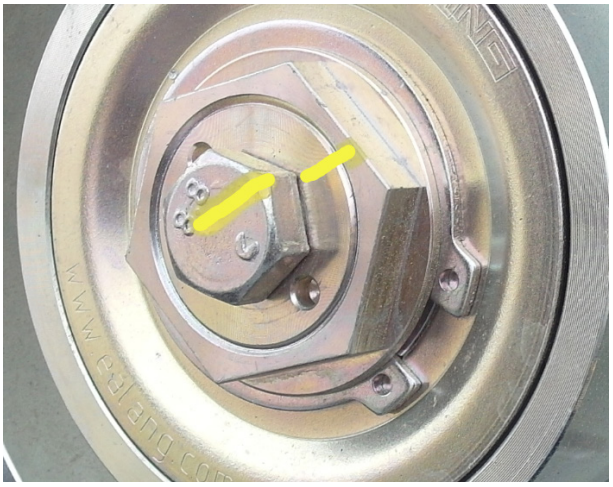

During cleaning or other work on the compressor, the clutch must be covered to prevent the penetration of greasy liquids, grease or dirt particles in the working gap (see figure 2) of the clutch. No high pressure cleaning.

Working gap must be: 0.024 in - 0.035 in
0.60 mm - 0.90 mm

REINSTALLING THE BELTS

1. Reinstall the drive belts.

   A belt strand tension gage is needed

   On vehicles <u>not equipped</u> with an auxiliary alternator (i.e. 2 identical belts), belt tension should be within this range:

   90-100 lbs <u>new</u> belts (mean of 2 belt values)
   75-85 lbs <u>used</u> belts (mean of 2 belt values)

   On vehicles equipped with an auxiliary alternator (i.e. 2 different belts), belt tension should be within this range:

   A belt strand tension gage is needed
   150-160 lbs <u>new</u> belts (mean of 2 belt values)
   120-130 lbs <u>used</u> belts (mean of 2 belt values)

   Apply loctite on bolt (**B**) and hand tighten. Adjust belt tension using bolt (**A**). Use the jam nut to prevent rotation of bolt (**A**). When proper tension is achieved, tighten bolt (**B**) to **43 lbf-ft**. (58 N-m).

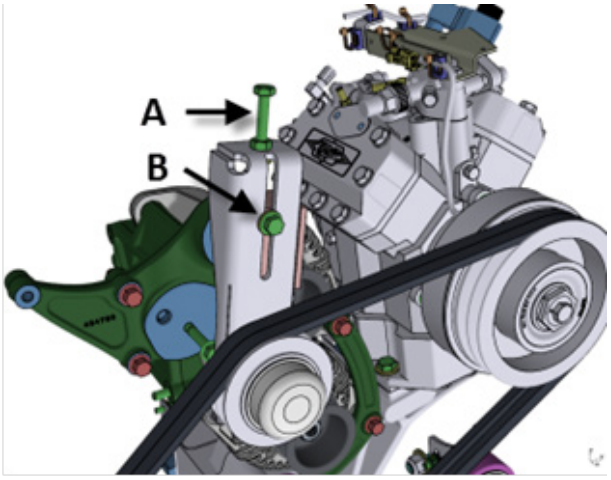

TROUBLESHOOTING, POSSIBLE DEFECTS, ELIMINATION

PROBLEM	CAUSE	SOLUTION
Clutch does not close any more, no current stream	Intermittent contact in the plug	Check plug
	Contact corroded	Clean contact
	Connection cable defect	Repair cable, replace coil
Clutch does not close in spite of current stream	Insufficient voltage supply	Check supply voltage
	Impurities in the working gap (foreign matters)	Disassemble clutch, remove foreign matters and assemble it again
Clutch slips when switched on (causes the destruction of the clutch by premature wear),	Insufficient voltage supply	Check power supply
	Friction surface polluted by small quantities of greasy/oily substances	Disassemble clutch, clean friction surfaces with alcohol and assemble it again.
	Heat penetration in the clutch by slipping V-belts thus grease penetration in the bearing or overheating of the clutch	Disassemble clutch. Clean friction surfaces or replace already damaged components. After reassembly of the clutch, tension V-belts correctly
	Incorrect distance between coil and rotor (coil not in line with the rotor), thus the switchable torque is reduced	Disassemble clutch, check cone for cleanness. Check the seat of the feather key, check the seat of the coil.
	Clutch worn, working gap too big (app. 1,2 mm), friction partner blue	Replace clutch or component
Clutch does not open immediately when switched off, this will cause a premature wear of the clutch), shrieking noise	Voltage supply not completely interrupted	Check circuit element for switching the coil ON/OFF and replace it if necessary
Clutch does not open any more, voltage supply is in order	Clutch worn and friction partners welded to each other on the friction surface	Replace clutch
Permanent grinding noise	Coil not correctly centered or not firmly screwed down	Check coil, screw it down, or replace it if damaged. Check clutch for consequential damages, eventually disassemble clutch, check bearing and friction surfaces, replace eventually damaged components.
	Compressor bearings defect, causes friction between coil and rotor.	Replace bearings. Check coil function. Replace it if damaged. If clutch slips, replace whole clutch due to friction damage.

	Friction surface polluted by greasy or oily substances	Disassemble the clutch, replace bearing, if necessary, clean friction surfaces with alcohol and assemble them again.
	Blockade of the compressor. Clutch slips, both components blue due to friction heating.	Clutch destroyed, replace it.
Untrue run of the pulley, loud running noise.	Bearing damaged due to wear or incorrect seat of the feather key.	Check whether feather key and groove are flushing. If not, change clutch as the components will be permanently damaged, or disassemble the clutch and replace bearing.

SUPPLEMENT

HOW TO INSTALL A NEW “CLIP-ON” UNLOADER COIL

1. Loosen the screw securing the connector to the coil and then unplug the connector (**A**). Keep the screw and the connector rubber gasket for later use.
2. Unscrew the aluminum cap and discard.
3. Remove the plastic capture nut and discard.
4. Remove the coil and discard
5. **Keep the O-ring** on the stem.

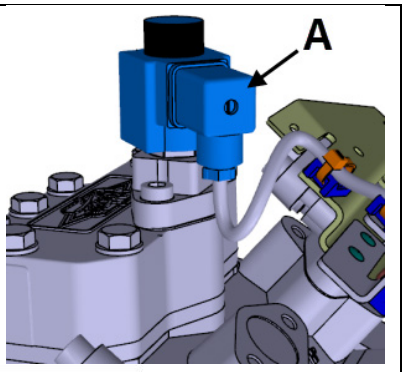

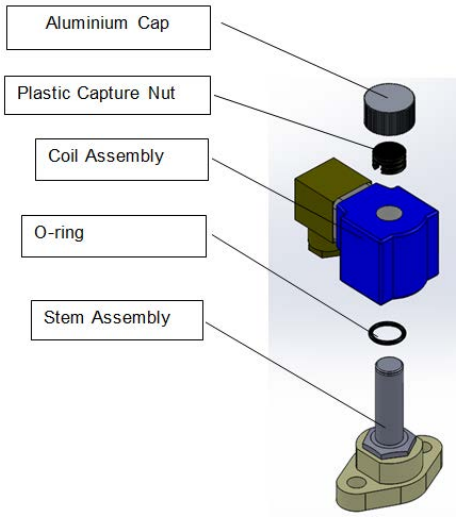

6. Install the new clip-on coil on the stem.
7. Slide the coil over the stem assembly with the O-ring at the base of the stem.

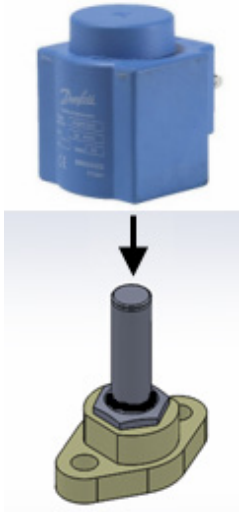

PARTS / WASTE DISPOSAL

Discard according to applicable environmental regulations (Municipal/State[Prov.]/ Federal)

Access all our Service Bulletins on http://techpub.prevostcar.com/en/
Or scan the QR-Code with your smart phone
.

Are you a vehicle owner?
E-mail us at ***technicalpublications_prev@volvo.com*** *and type "ADD" in the subject to receive warranty bulletins applicable to your vehicle(s) by e-mail.*