MAINTENANCE INFORMATION

MI18-27A

DATE :	June 2018	SECTION : 23 ACCESSORIES
SUBJECT :	**DESCRIPTION OF THE AMEREX FIRE DETECTION & SUPPRESSION SYSTEM (AFSS)**	

Revision: A — Added: Image showing proper discharge nozzle blow off cap position — 06-29-2018

APPLICATION

Model	VIN
X3-45 Commuter	**CUSTOMER OPTION**

INTRODUCTION 4

LITERATURE 5

AMEREX SYSTEM ON THE PREVOST COMMUTER COACHES 6

ELECTRICAL DIAGRAM 6
SIMPLIFIED SCHEMATIC 7
PICTURES/IMAGES 8
« SAFETYNET » DRIVER PANEL 12
REPLACEMENT BATTERY FOR DRIVER PANEL 13
« SAFETYNET » OPERATOR'S DISPLAY PANEL 14
SPOT HEAT DETECTOR 16
CLASS B CABLE DETECTION INTERFACE 17
ACTUATION CABLE 17
LINEAR ACTUATOR 17
MANUAL ACTUATION SWITCH 18
AGENT CYLINDER PRESSURE SWITCH 19
END OF LINE DEVICE 20
EXTINGUISHER AGENT CONTAINER (A.K.A. AGENT CYLINDER) 20
SYSTEM ACTUATION - ELECTRIC CONTROL HEAD 22
DISCHARGE FITTING KIT 22
DISTRIBUTION HOSE BLOWOUT ADAPTER 23
DISCHARGE NOZZLE 23

CONTROL PANEL (OPERATOR DISPLAY PANEL) PROGRAMMING AND OPERATION 25

SELF CONFIGURATION 25

SAFETYNET FUNCTION TESTING & INITIAL COMMISSIONING 29

OPERATOR DISPLAY PANEL TESTING 29
MANUAL ACTUATION BUTTON TESTING 29
DETECTION SENSOR TESTING 30

INSPECTION & MAINTENANCE 31

DAILY INSPECTION: OPERATOR / OWNER 31
MONTHLY INSPECTION: OPERATOR/ OWNER 31
SEMIANNUAL MAINTENANCE: AUTHORIZED AMEREX TECHNICIAN 32

TWO (2) YEAR MAINTENANCE 32
SIX (6) YEAR MAINTENANCE: AUTHORIZED AMEREX TECHNICIAN 34
TWELVE (12) YEAR MAINTENANCE 34

SYSTEM ALARMS & TROUBLESHOOTING 34

EVENT DEFINITIONS 36
SAFETYNET INTERFACE MODULE (AMEREX P/N 16609) 36

OTHER INFORMATION 37

PARTS / WASTE DISPOSAL 38

INTRODUCTION

Amerex Modular Dry Chemical Fire Suppression Systems are pre-engineered FM Approved systems that are designed specifically for protection of mobile equipment. Each system uses stored pressure Agent Cylinder with predetermined nozzle flow rates, quantities (*4x*) and discharge volumes. The Dry Chemical Agent is discharged into hazard areas via an Agent Distribution Network consisting of flexible hydraulic hose or stainless steel tubing.

The release of the extinguishing agent is automatic once a fire is detected by the fire-sensing devices (*3x Spot Heat Detector*), however, a *manual activation button* is provided on the operator's display panel.

On Prevost Commuter vehicles, the release of the extinguishing agent cannot be delayed. The engine shutdown is managed by the MUX system and will occur after 15 seconds. The engine shutdown can be delayed using the *Engine Stop Override* switch located on the dashboard.

LITERATURE

Amerex manuals on the TechPubs site

AMEREX P/N 16601 Rev C

AMEREX P/N 13980 Rev C

AMEREX P/N 16602 Feb2007

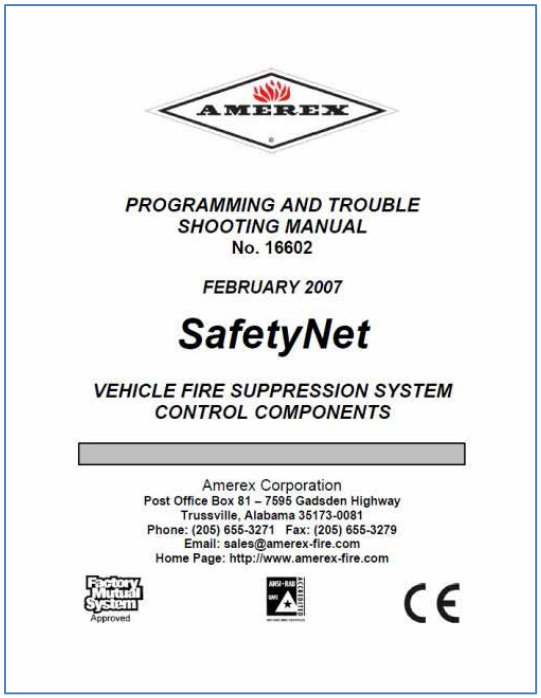

AMEREX SYSTEM ON THE PREVOST COMMUTER COACHES

ELECTRICAL DIAGRAM

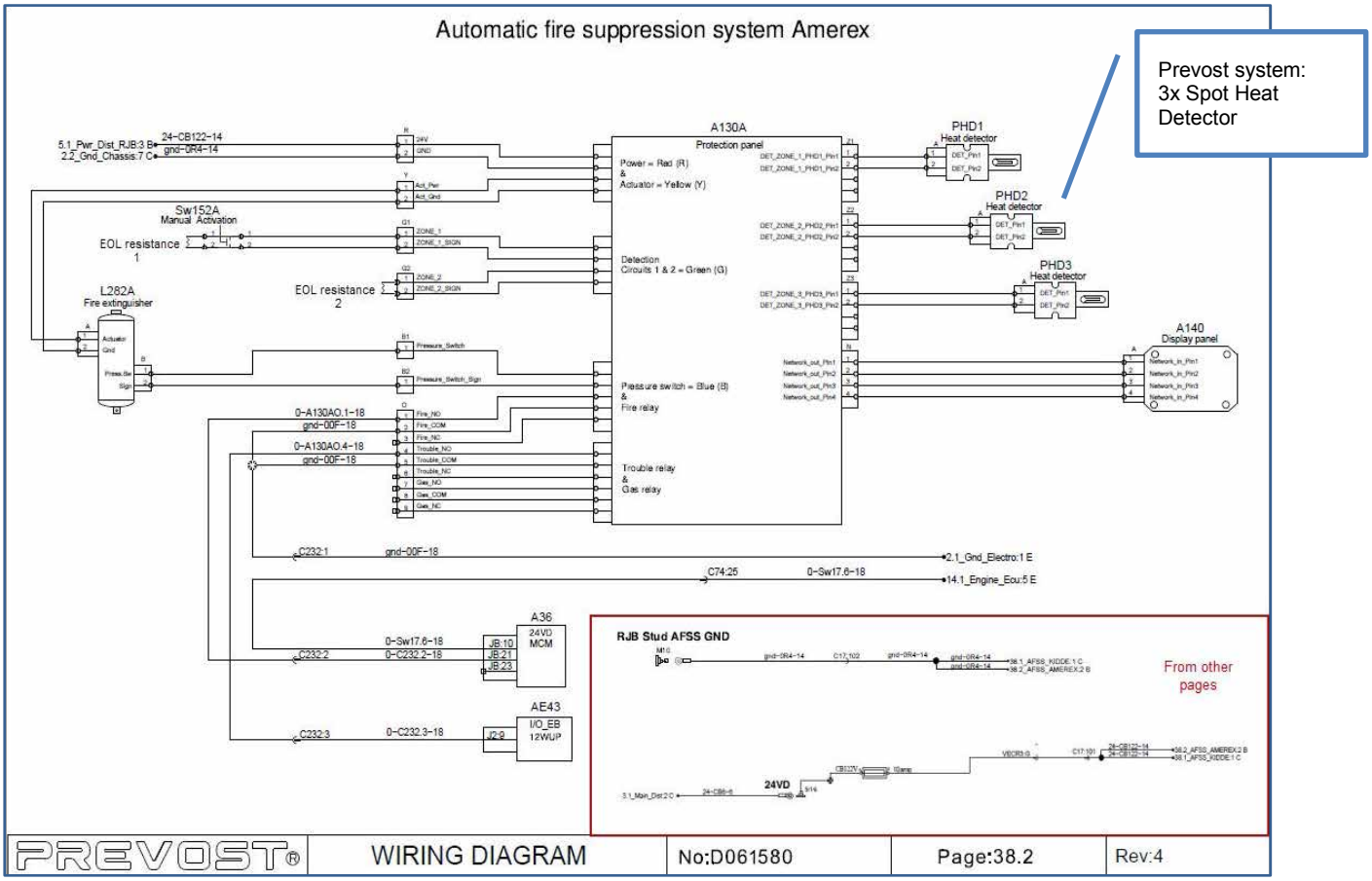

SIMPLIFIED SCHEMATIC

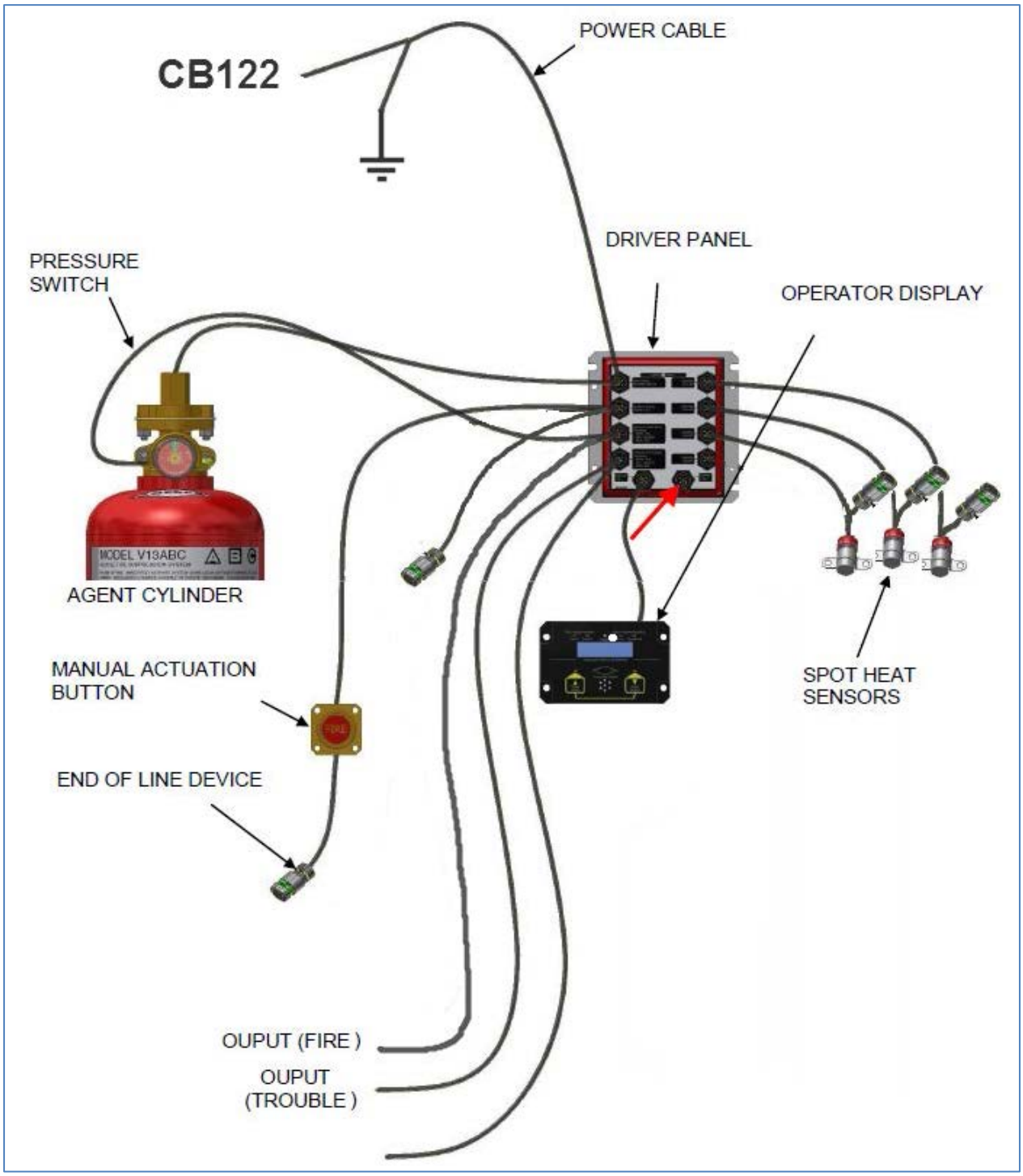

PICTURES/IMAGES

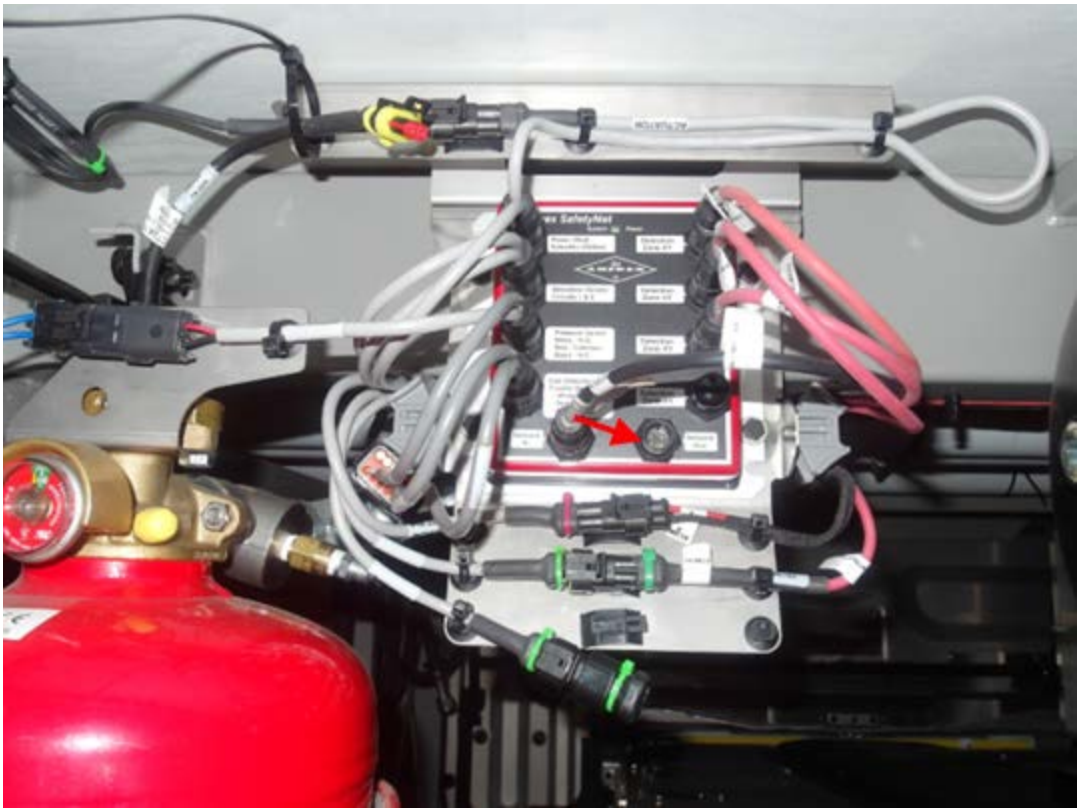

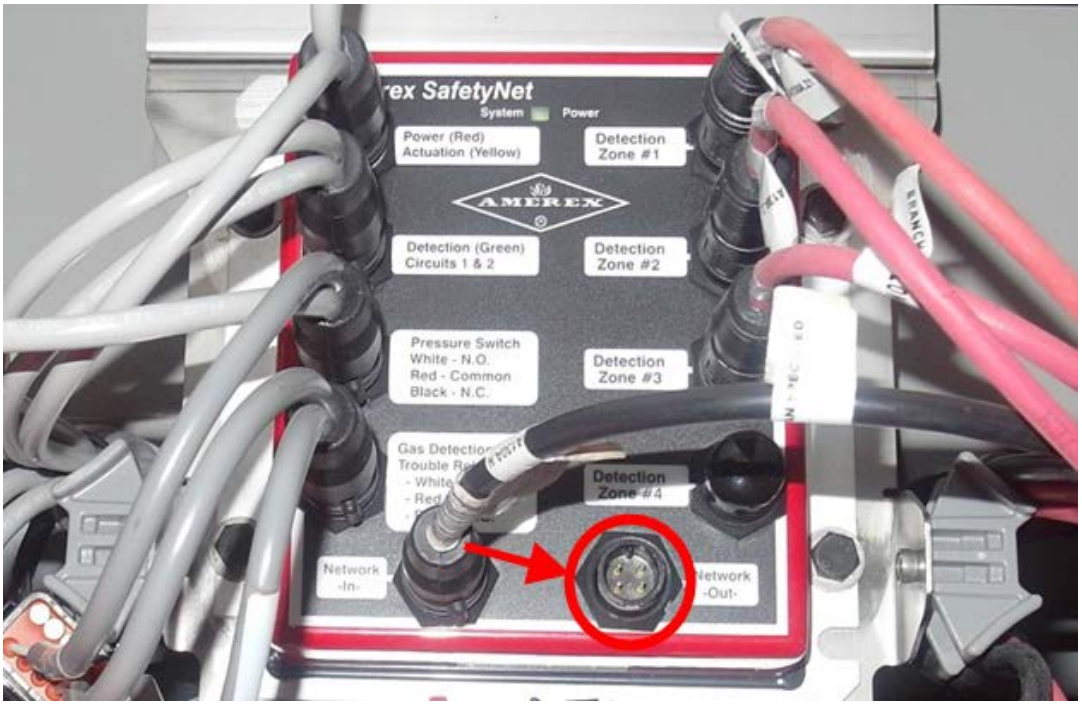

THE NETWORK CABLE IS CONNECTED TO THE NETWORD R.H. CONNECTOR, IDENTIFIED WITH A RED ARROW

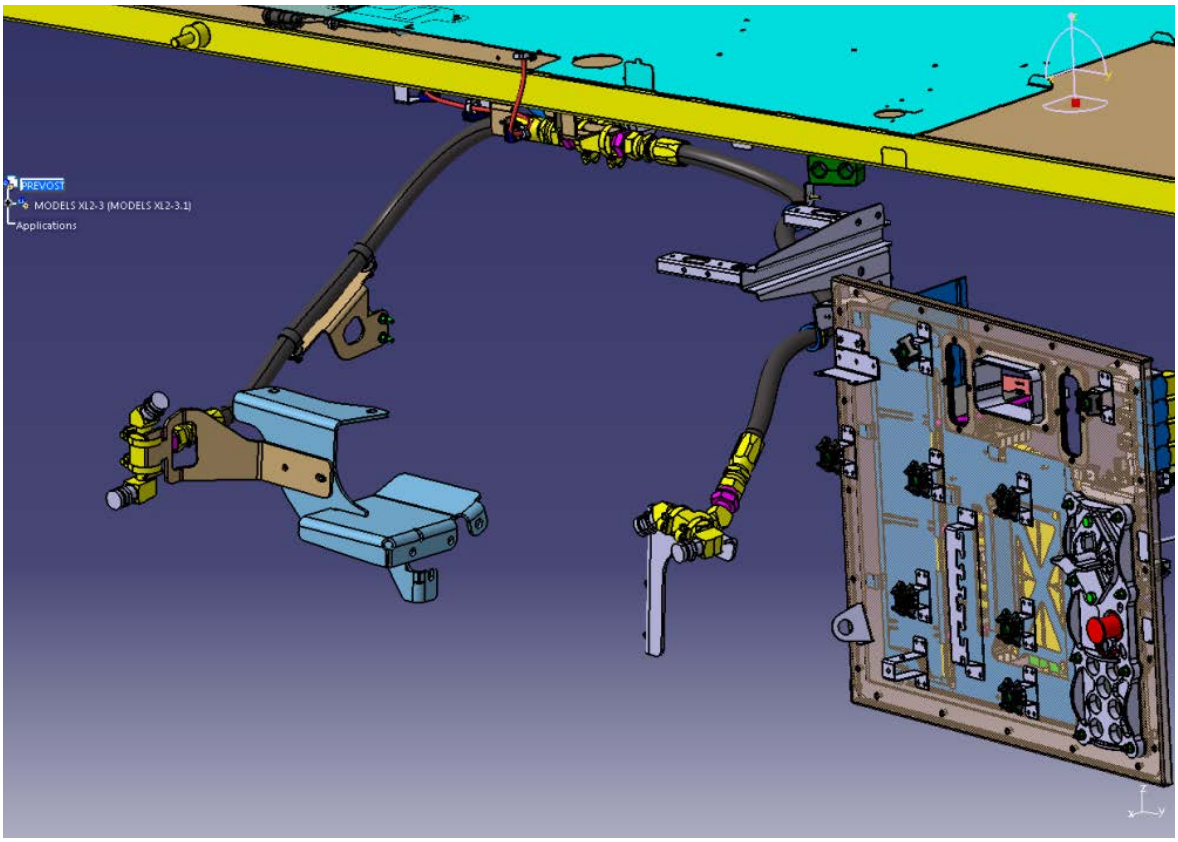
PREVOST
MODELS XL2-3 (MODELS XL2-3.1)
Applications

NOZZLES

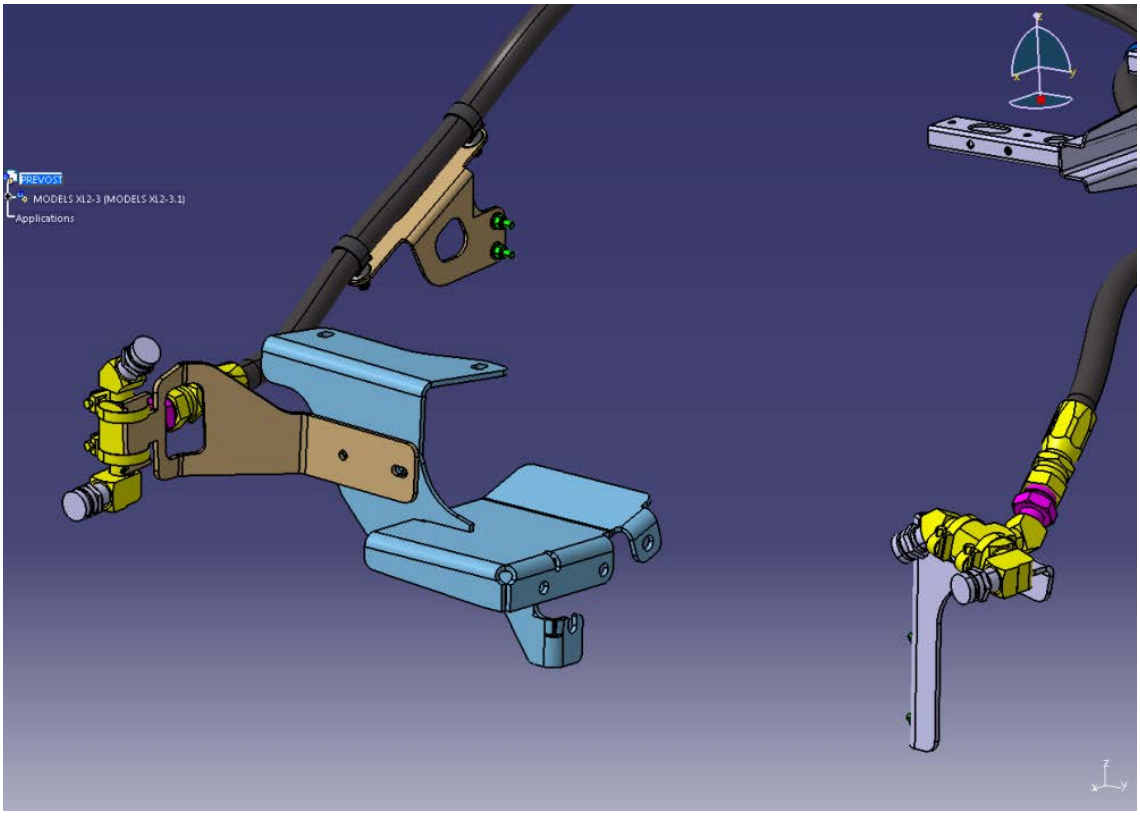
PREVOST
MODELS XL2-3 (MODELS XL2-3.1)
Applications

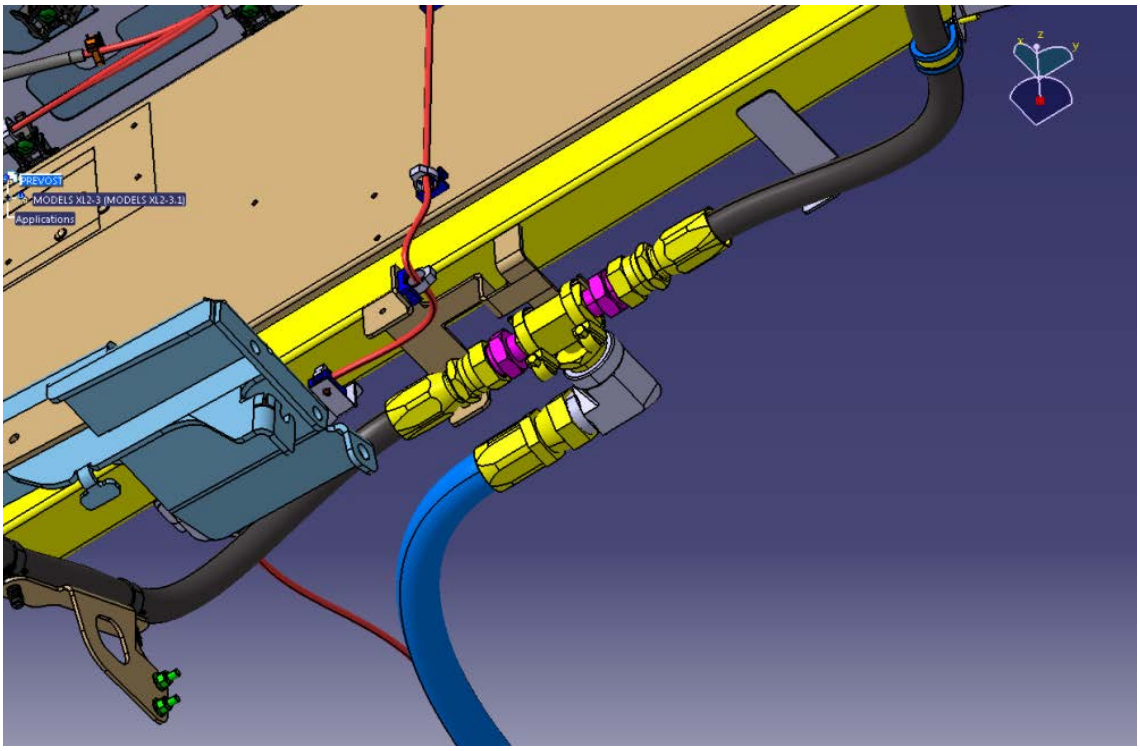

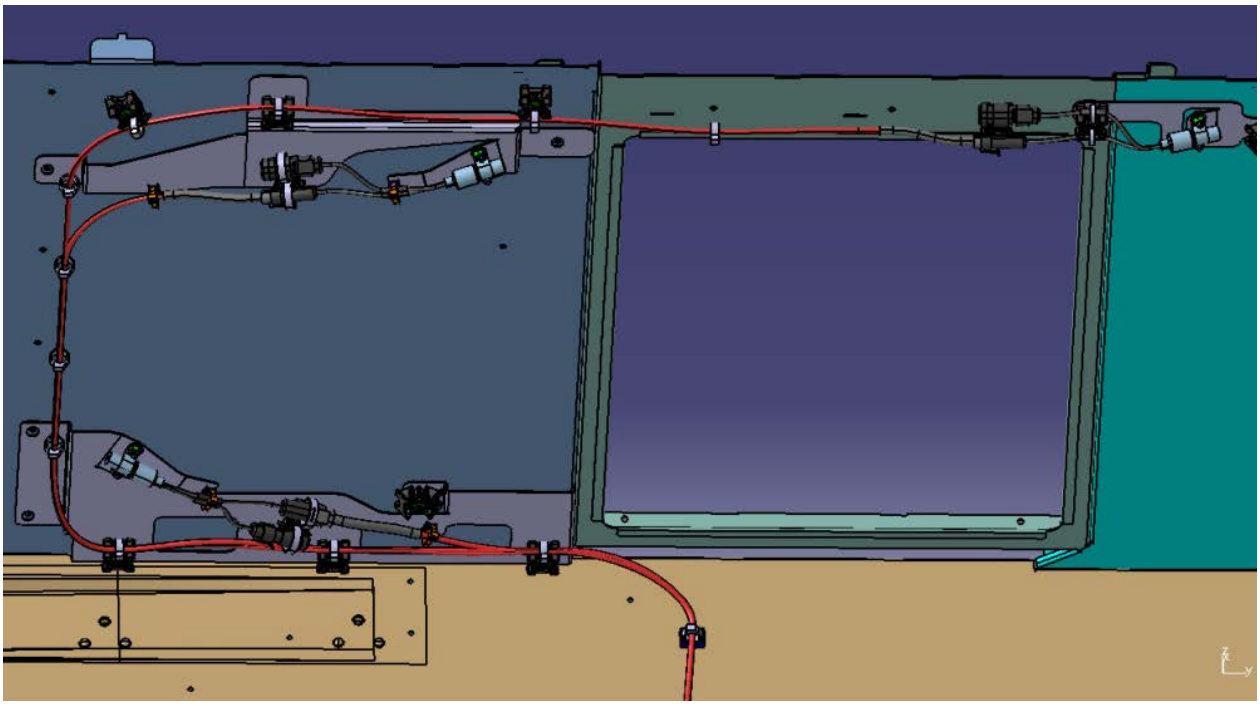

SPOT HEAT DETECTORS (3X)

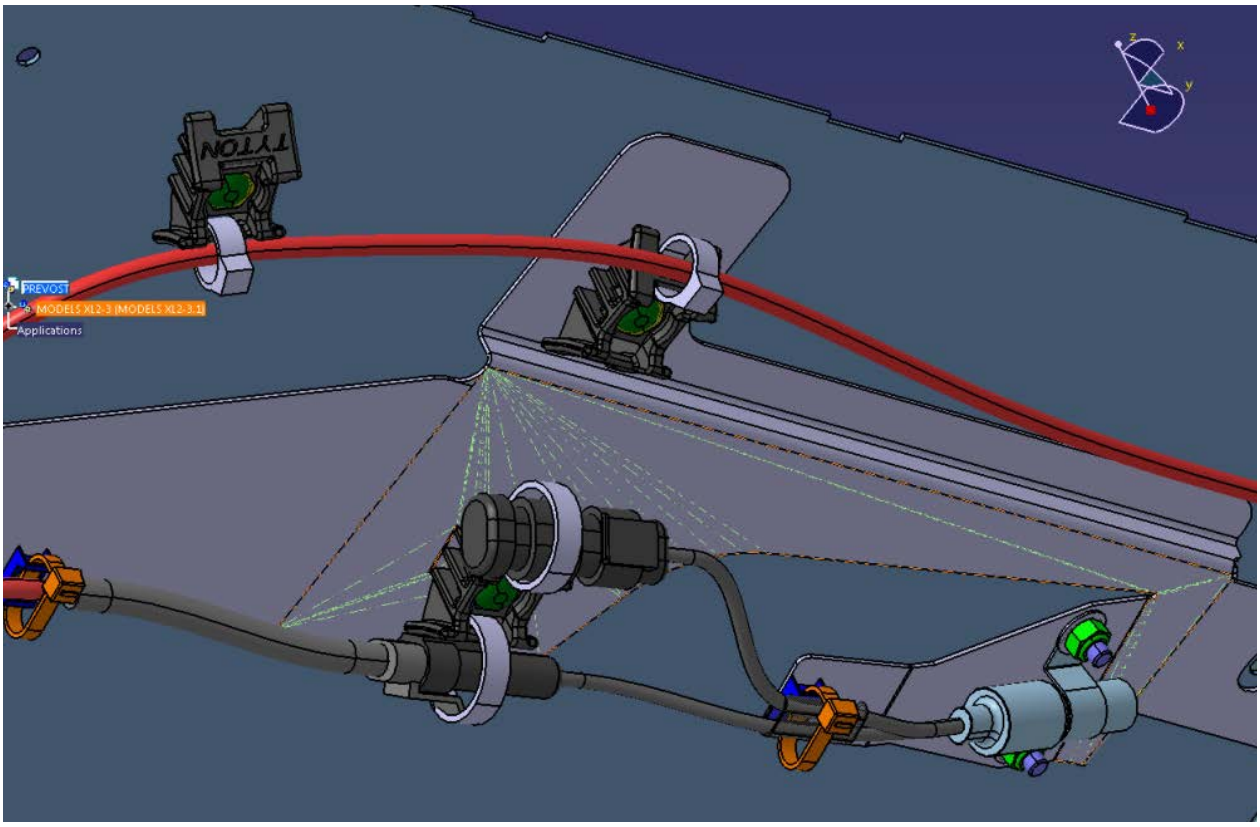
PREVOST
MODELS XL2-3 (MODELS XL2-3.1)
Applications

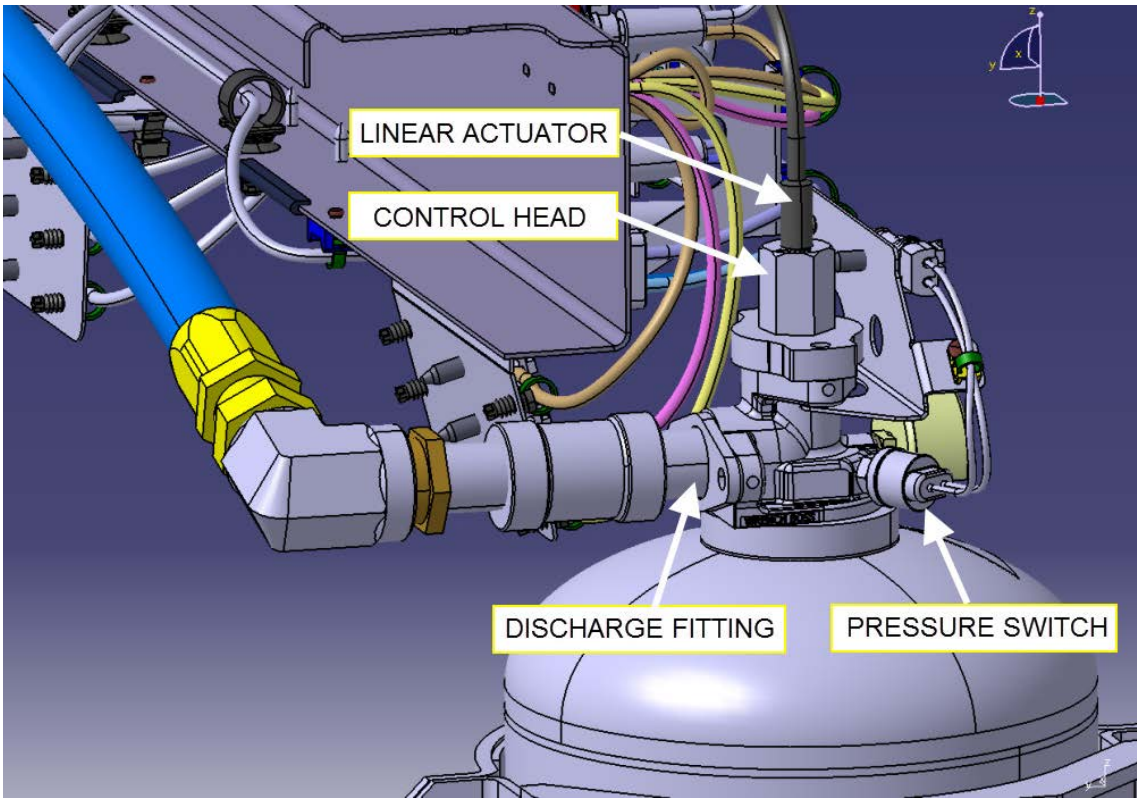
LINEAR ACTUATOR
CONTROL HEAD
DISCHARGE FITTING
PRESSURE SWITCH

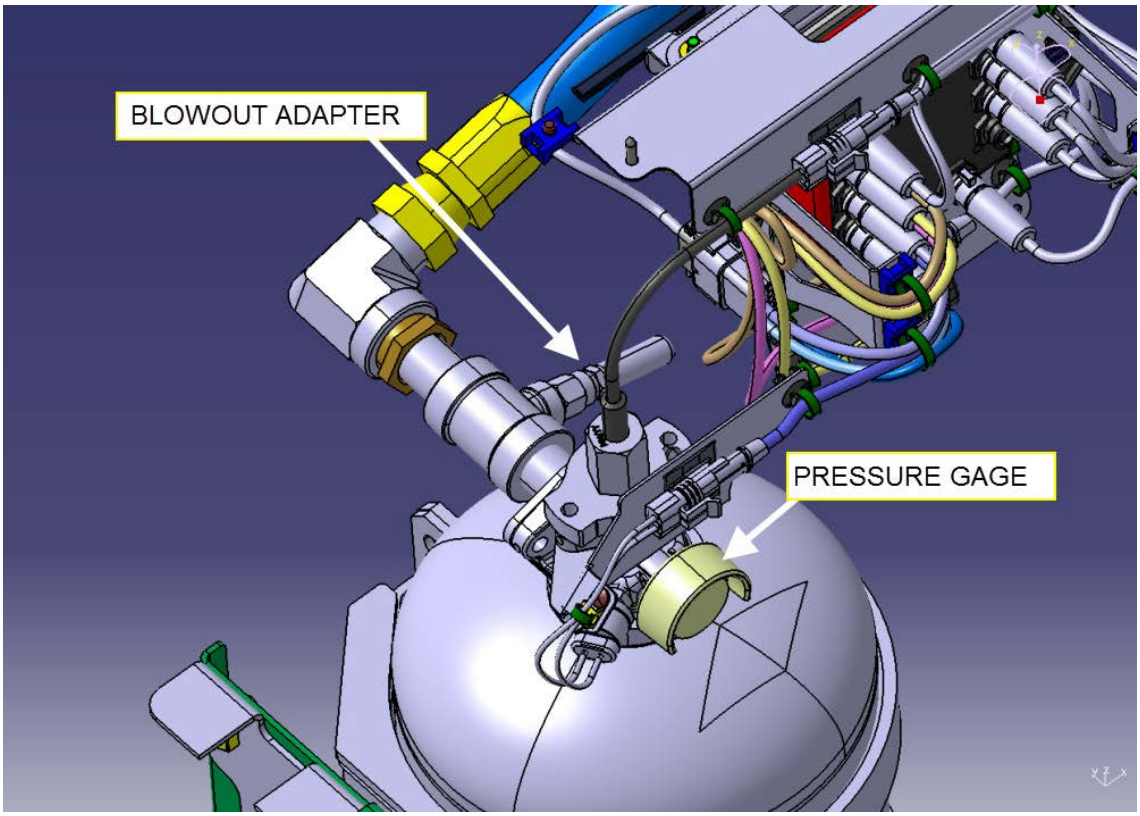

« SAFETYNET » DRIVER PANEL

The Driver Panel is supplied with modular lead assemblies that provide connecting points for fire suppression field wiring inputs and outputs. Connections are provided for:

- System Power
- Fire Suppression Actuation
- Class B Heat Detection Devices
- Manual Actuation
- Agent Cylinder Pressure Supervision
- Relay Contacts (Fire, Trouble)
- Network Output/Input Connectivity

The Driver Panel includes battery backup for up to 24 hours of fire suppression capability in the event of system power failure. Sensor alarm warning is provided to the Operator Display Panel via a network cable. In the event of network failure, the Driver Panel contains default operating software, which allows the module to continue operation.

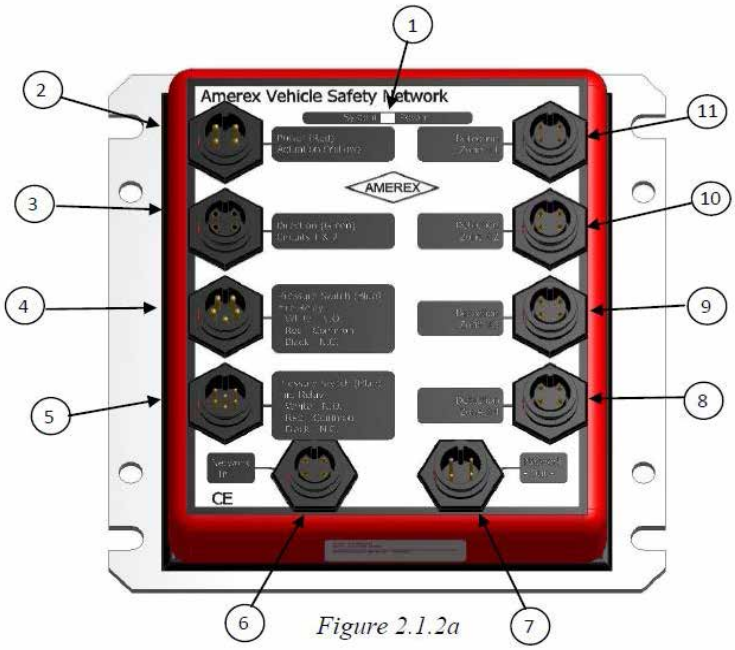

Figure 2.1.2a

Table 2.1.2

SAFETYNET DRIVER PANEL FEATURES			
1	System Power - Green LED	6	Network Input
	System Trouble - Yellow LED	7	Network Output
2	System Power & Linear Actuator	8	Detection Zone #4
3	Class B Detection & Manual Act. Circuits	9	Detection Zone #3
4	Pressure Switch & Fire Relay Contacts	10	Detection Zone #2
5	Gas Relay & Trouble Relay Contacts	11	Detection Zone #1

REPLACEMENT BATTERY FOR DRIVER PANEL

The Replacement Battery is composed of 7 Nickel Metal Hydride cells in series. Nominal voltage is 8.4 VDC for this product. It takes approximately 8 hours to fully charge this battery from a fully discharged state.

The internal Nickel Metal Hydride (NiMH) backup battery installed in the SafetyNet Driver Panel will require periodic replacement (2 years). Verify battery date shown on a label on the back side of the Driver Panel. If the battery is out of date or will be out of date before the next six months service, replace it and the Replacement Battery Label.

« SAFETYNET » OPERATOR'S DISPLAY PANEL

The Amerex Vehicle SafetyNet Operator's Display Panel indicates vehicle fire suppression system status to the vehicle operator or maintenance personnel. Basic system status is indicated via easy to read LEDs and audible alarm indications. Detailed "Event" text messages are shown on the panel display.

Sensor alarm warning is provided to the Operator Display Panel via a network cable. In the event of network failure, the Driver Panel contains default operating software, which allows the module to continue operation.

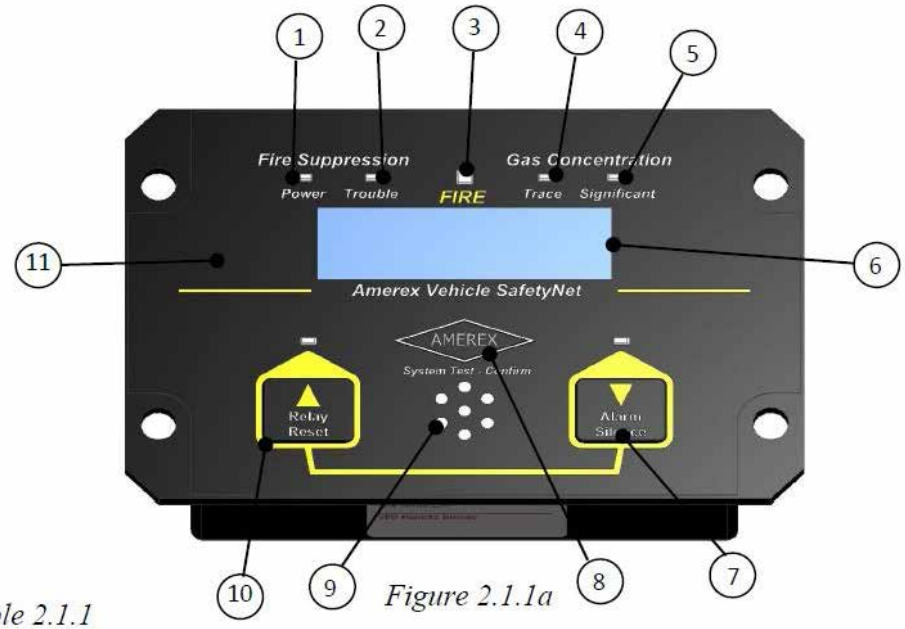

Figure 2.1.1a

Table 2.1.1

SAFETYNET OPERATOR DISPLAY PANEL FEATURES			
1	System Power - Green LED	7	Alarm Silence Button & Red LED
2	System Trouble - Yellow LED	8	Push to Test & System
3	Fire Indication - Red LED		Confirmation Switch
4	Trace Gas - Yellow LED	9	Audible Alarm
5	Significant Gas - Red LED	10	Relay Reset & Red LED
6	Vacuum Florescent Display VFD	11	Ambient Light Sensor

Connections are provided for:

- System Power

- Fire Suppression Actuation
- Class B Heat Detection Devices
- Manual Actuation
- Agent Cylinder Pressure Supervision
- Relay Contacts (Fire, Trouble)
- Network Output/Input Connectivity

SPOT HEAT DETECTOR

A Spot Heat Detector is a normally open, self-resetting contact closure device. The device is configured with four wires for allowing supervision of series connected circuitry. The internal contacts of the device will close upon reaching designed temperature set point parameters.

Supplied with a 350°F set point rating

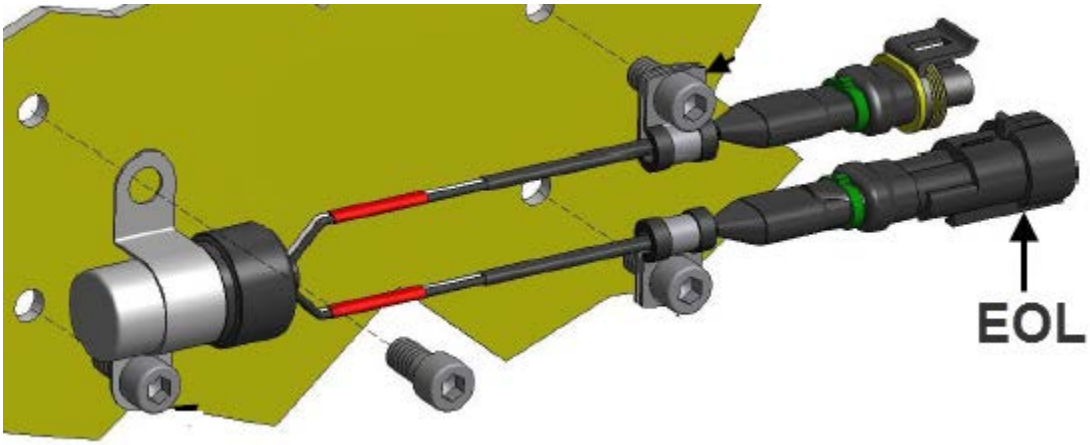

CLASS B CABLE DETECTION INTERFACE

The Class B Detection Interface Cable allows the SafetyNet Driver Panel, Detection and Release Module to connect to:

- Spot Heat Detectors (3x)

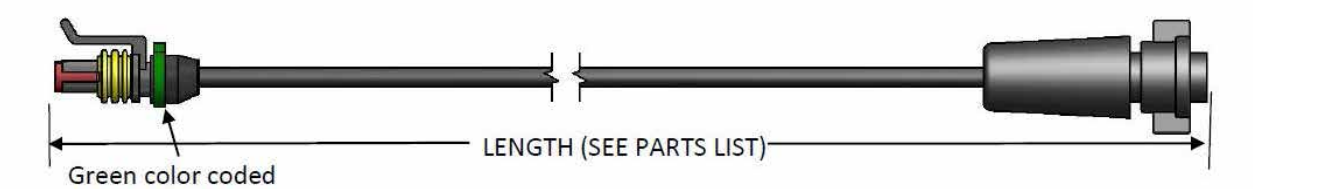

ACTUATION CABLE

The Linear Actuator Connector Lead Assembly must be used to connect the Linear Actuator to the Driver Panel. The Actuator Connector Lead is a two-conductor wire equipped with **yellow color-coded Amerex connectors**. These connectors mate with the associated connector at the Control Panel and the Linear Actuator (for the releasing of the extinguisher agent).

LINEAR ACTUATOR

When electrically activated, the Linear Actuator is a device which extends a metal shaft which mechanically opens the Agent Cylinder Valve when used in a control head. Once activated it cannot be reused and must be replaced. **Service life of the Linear Actuator is 6 years after which it must be replaced. Shelf life of the Linear Actuator is 10 years after which it must be replaced whether it has been placed in service or not.** Each Linear Actuator is supplied with a Mylar style label for identifying date of manufacture. An O-RING is provided with each Linear Actuator, and must be used each time that a Linear Actuator is installed.

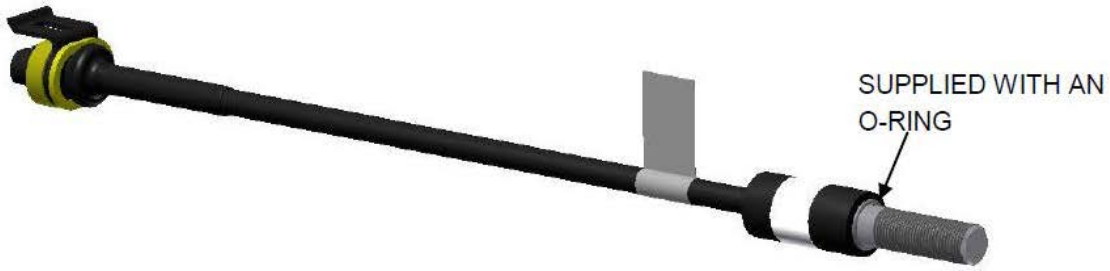

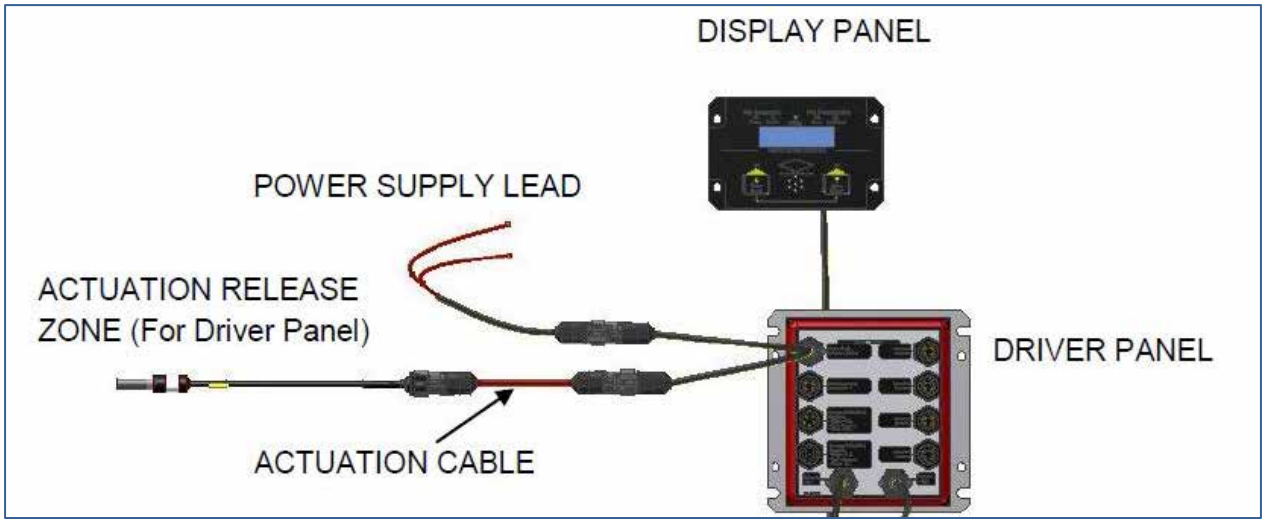

ACTUATION CIRCUIT

MANUAL ACTUATION SWITCH

The Manual Actuation Button to manually actuate the fire suppression system. To use the switch, the operator pulls out the safety ring pin breaking the tamper seal, and presses the red "FIRE" button. This action provides electrical power to the Electric Actuator, which discharges the fire extinguishing system.

Note: Plastic tamper seal included. Replacement tamper seals are available.

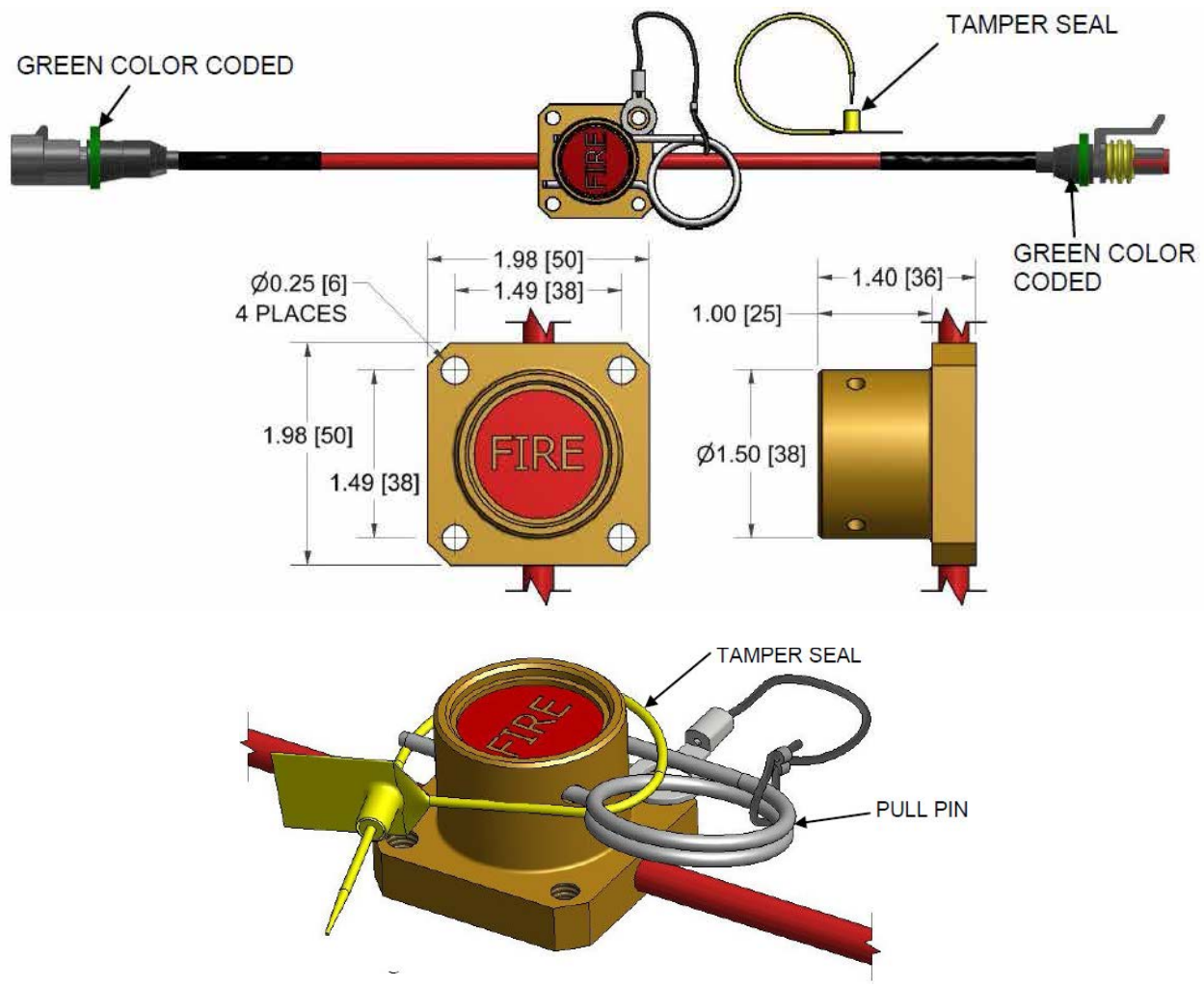

AGENT CYLINDER PRESSURE SWITCH

The Agent Cylinder Pressure Switch utilizes 1/4" NPT threads for securing to the agent cylinder valve. The switch is designed to monitor agent cylinder pressure. The switch is normally open and closes when pressure in excess of 330 PSI is exerted on it. The internal contacts of the switch will open when pressure exerted on it drops below 270 PSI.

The Pressure Switch located on a fire suppression agent cylinder is connected to the Driver Panel through a pressure switch circuit. This normally closed circuit monitors the pressure within an agent cylinder and indicates a fault if pressure is lost.

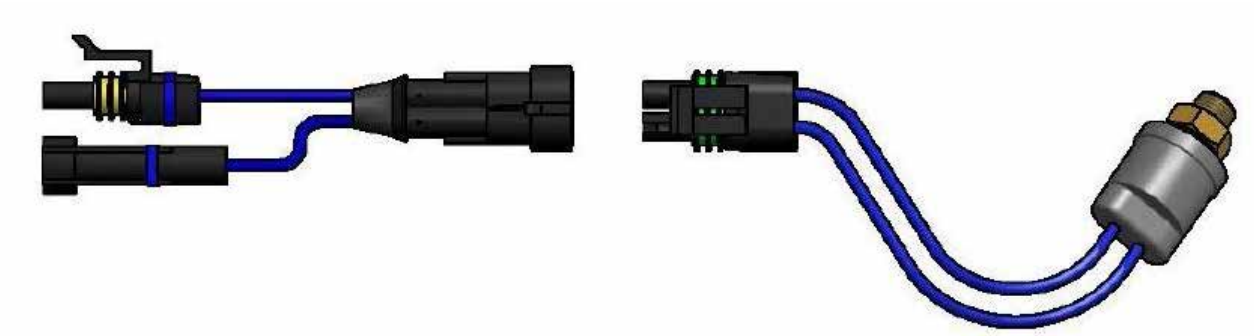

END OF LINE DEVICE

The End of Line Device (EOL) is utilized to supervise circuitry on the Class B Detection Network. The EOL is color coded green. The device provides a continuous electrical circuit allowing for electronic display panel supervision of the normally open detection network.

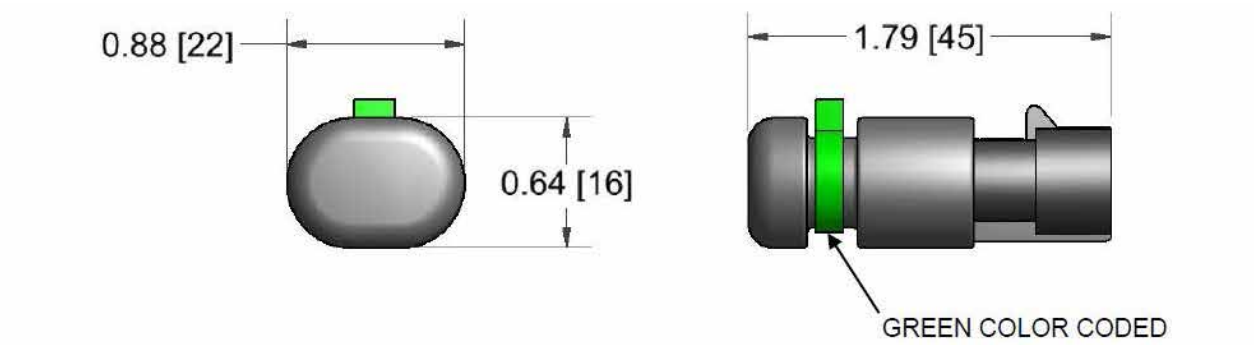

EXTINGUISHER AGENT CONTAINER (A.K.A. AGENT CYLINDER)

The Agent Cylinders are shipped fully charged from the factory. Each Agent Cylinder includes a brass Agent Cylinder Valve with a Pressure Gage and a safety Rupture Disc with Dust Cap installed. Agent Cylinders are pressurized with nitrogen gas to a pressure of 350 psi (2413 kPa) at 70°F (21°C). Agent Cylinders are equipped with a Shipping Plate on top of the Agent Cylinder Valve and Anti-Recoil Plate installed on the Agent Cylinder Valve discharge outlet to prevent accidental discharge and to minimize recoil in the unlikely event of an accidental discharge during shipment. These safety components are removed only when the Agent Cylinder is installed in the Cylinder Bracket and connected to Agent Distribution Network.

The Agent Cylinder requires a hydrostatic test every twelve years.

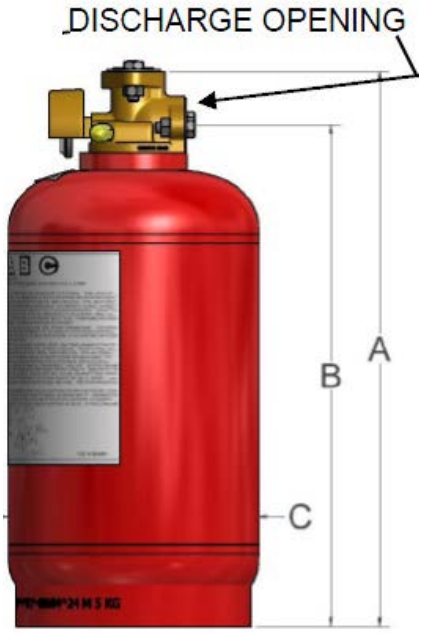

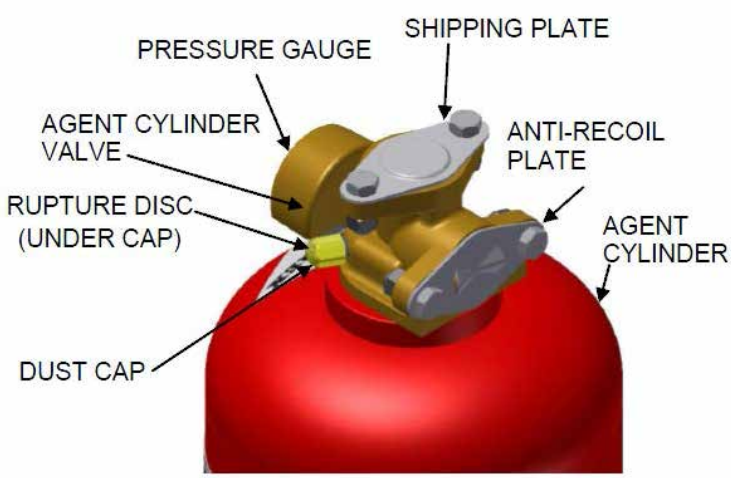

Agent Cylinder	Figure	Overall Height (A) in (mm)	Height to Discharge Opening (B) in (mm)	Diameter (C) in (mm)	Agent Capacity lb (kg)
V25	2.1.1.a	17.6 (447)	16.0 (406)	9.0 (229)	25 (11.3)

The Agent Cylinder must be mounted on a vertical surface. Maximum allowable offset from the vertical is +/-10°.

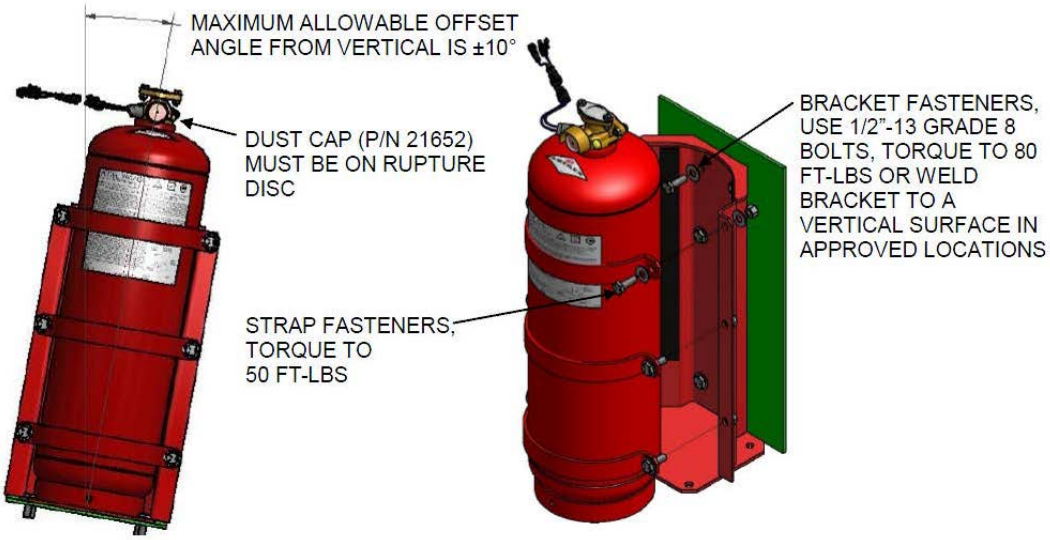

SYSTEM ACTUATION - ELECTRIC CONTROL HEAD

The Electric Control Head is used in all electrically only actuated Amerex Dry Chemical System installations. This device is constructed of machined brass and bolts directly to the top of the Agent Cylinder Valve. The body of the Electric Control Head is threaded to accept a Linear Actuator. The base retains the actuator piston and locking ring. The Linear Actuator, when activated, will force the piston inside the Electric Control Head down to depress the Agent Cylinder Valve stem, releasing the Dry Chemical Agent.

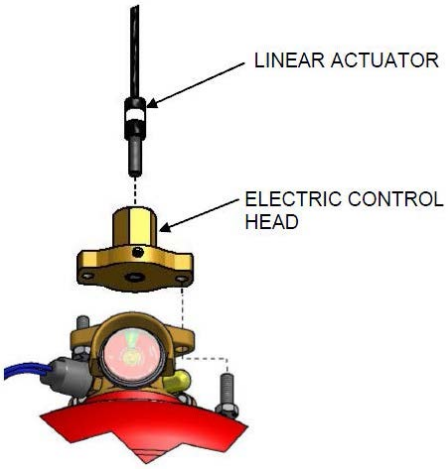

DISCHARGE FITTING KIT

The Discharge Fitting Kit is used to connect the Agent Cylinder Valve to the Agent Distribution Network. It consists of a brass fitting with an o-ring seal on one end and 3/4" NPT male pipe threads on the other, and a stainless steel flange for locking the fitting in place. The flange is placed over the threaded end of the fitting before connection to the Agent Distribution Network.

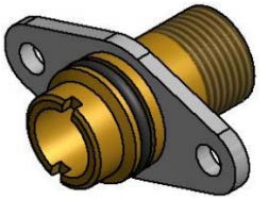

Remove the Anti-Recoil Plate from the Agent Cylinder valve and attach the Discharge Fitting Kit in its place using the same (2) 5/16" bolts and nuts. Use medium grade thread locking compound and torque to 10 ft-lbs. Connect the threaded end of the Discharge Fitting Kit to the Agent Distribution Network.

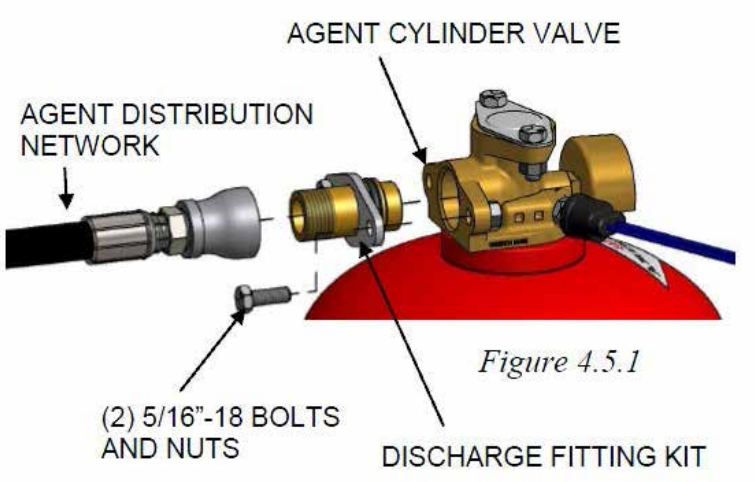

Figure 4.5.1

DISTRIBUTION HOSE BLOWOUT ADAPTER

When commissioning the Amerex Modular Dry Chemical System, upon initial installation, and **at each (6) six month service**, the Agent Distribution Network must be purged with dry air at a minimum of 90 psi (620 kPa) by using the Distribution Hose Blowout Adapter.

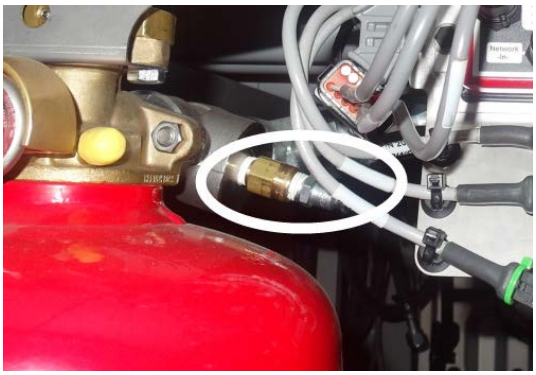

DISCHARGE NOZZLE

The Discharge Nozzle is used for dispersing Dry Chemical Agent in a cone-shaped pattern into the hazard area. It is constructed of brass and is machined with a 1/2" NPT male thread. It is shipped with a heat and weather-resistant rubber Protective Nozzle Blow-Off Cap that prevents debris from lodging in the Nozzle outlet. The blow off cap is molded with a retaining loop that assembles over the 1/2" NPT threads before the nozzle is installed.

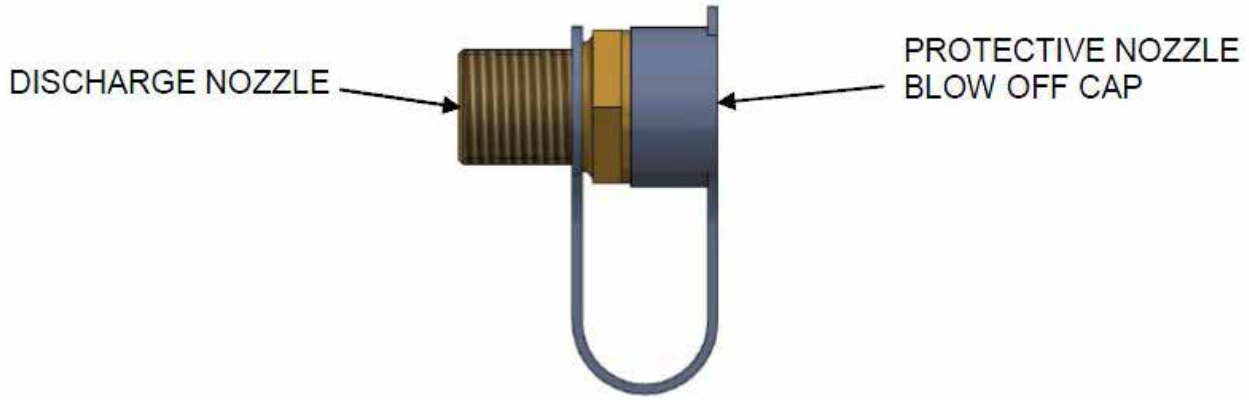

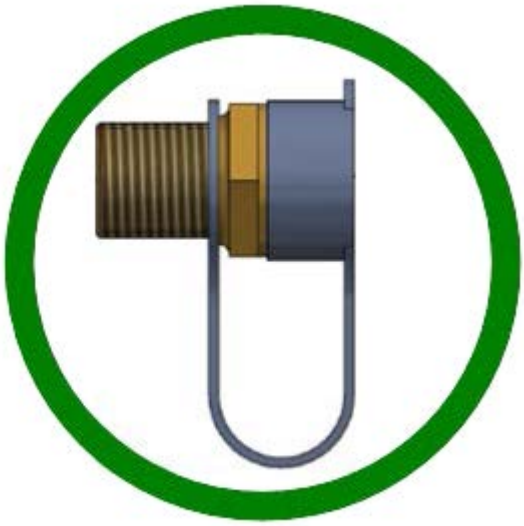

PROPER LOOP POSITION

WRONG LOOP POSITION

The loop must be located below the nozzle, otherwise the blow off cap may interrupt the flow of extinguishing agent

CONTROL PANEL (OPERATOR DISPLAY PANEL) PROGRAMMING AND OPERATION

SELF CONFIGURATION

Once the SafetyNet system is installed, module connections are made and 24 Volts DC is applied, the Operator Interface panel will display the following information as it self-configures.

Identifies this as the Vehicle SafetyNetwork

Displays the current Software Revision Level (May be different than shown here)

·SafetyNet is searching for Network Modules

·Identifies Number of Modules Found (Driver, De-
tection, Detection Release, and/or Release Module)

Indicates all connected components are OK

After the System OK message is displayed, SafetyNet is operational and will display no message until the system normal status changes. Any change in status is recorded as an event which is logged. A change in system status is accompanied by a Display Message, an audible alarm and an indicating LED warning.

As described earlier, SafetyNet will self-configure by recognizing the number and type of Modules, Sensors and where each component is located in the installation. SafetyNet also recognizes when Sensor inputs and Releasing Circuit outputs are not populated. Safe-tyNet requires installer confirmation of intentionally unpopulated Detection and Releasing Zones. If an

input or releasing zone is “missing,” the SafetyNet System installer must choose to leave the zone unpopulated and “confirm” the choice on the Operator Display.

If input or output zone zones are not used, a separate Operator Display menu selection is displayed. The following Operator Display screens illustrate the confirmation process:

Missing Sensor

The figure above shows a screen display of a missing sensor on module #1. SafetyNet asks you to confirm whether this sensor should really be missing. Use either of the two outside buttons to scroll up or down to choose Yes or No.

Missing Sensor Confirmed

The figure above shows the screen display after you have scrolled to select YES. Press the Amerex Logo Button to confirm your choice.

System Configuration Saved

The figure above shows the screen display after the technician has pressed the Amerex Logo Button to confirm the sensor should be missing. If other sensors or actuators are found to be missing, SafetyNet will move to the next missing device and ask to confirm that the device should be missing. Once all of the missing devices have been confirmed, SafetyNet saves the configuration. As long as the configuration is not changed, sensors of the same type may be

changed or the system may be powered down. SafetyNet will keep the configuration in memory and will not require another reconfiguration.

Note: The SafetyNet electronic control system is now self-configured according to the components as installed at the time of the self-configuration function just completed. The system may also be custom configured in an almost infinite number of possible ways. Custom programming is done via a laptop or tablet computer interfaced with the SafetyNet software using the AMEREX P/N 16609 SafetyNet Interface Module. Complete Interface Module and programming instructions are found in the AMEREX P/N 16602 SafetyNet Programming Manual available separately or on-line at: www.amerex-fire.com

SAFETYNET FUNCTION TESTING & INITIAL COMMISSIONING

After the configuration has been confirmed or uploaded from a PC, the SafetyNet system and components must be functionally tested as part of the initial commissioning. These tests include Operator Display Panel, Manual Release, actuation circuit, detection sensors, and circuit fault testing as shown in the following sections. Ensure that power is supplied to the system and that all circuits are connected before proceeding. The green ‘POWER’ LED on the Operator Display Panel face should only be illuminated. A “SYSTEM OK” message may also temporarily be displayed on the screen. If not, recheck all connections until only the ‘’POWER” LED is illuminated.

OPERATOR DISPLAY PANEL TESTING

Operator Display LED and audible alarm testing is performed using the ‘**Push to Test**’ button (Amerex Logo) located on the front of the panel. Press and hold the button for 3 seconds. All Operator Display Panel LEDs will illuminate, the audible alarm will sound, and the relay countdown will start indicating that the Display Panel is functioning properly.

MANUAL ACTUATION BUTTON TESTING

This test verifies the Manual Actuation Button is connected and functions properly. Before performing Manual Actuation testing, disconnect the Linear Actuators from the system and replace with a Fire Alarm Module. A fault condition will occur on the Operator Display Panel until the Alarm Modules are connected. Caution: A fire suppression system discharge may occur if the Linear Actuator is not disconnected before proceeding! A Manual Actuation Button is located in the driver's area. Break the lock wire seal, pull out the safety ring pin and press the red FIRE button. Verify the Operator Display goes into the fire alarm mode as described in *Table 4.7.3.* Press the alarm silence button on the Operator Display.

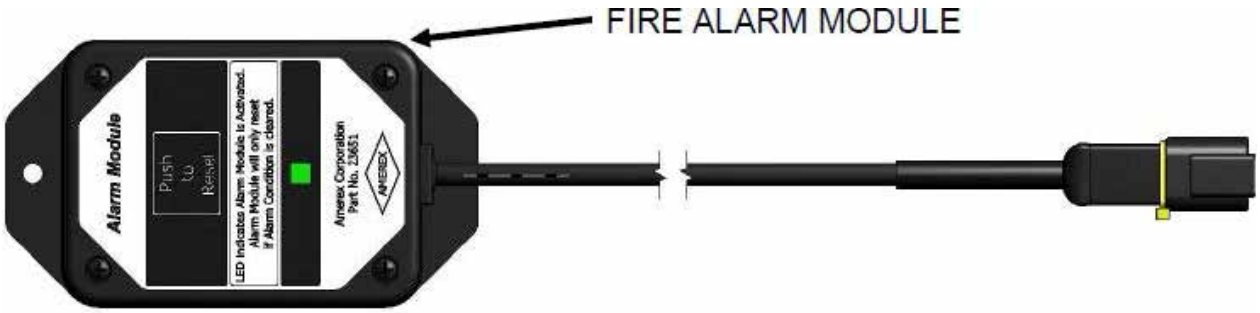

PREVOST P/N 19507954

The alarm will silence and the "Alarm Silenced" LED will remain on. Press the 'Push to Reset' button located on the Alarm Module. Remaining illuminated LEDs will go OFF, and the green 'Power' LED will illuminate. Replace the safety pin and lock wire seal on the button. Repeat test for all addition Manual Actuation Buttons on the system (not applicable on Prevost Commuters).

Table 4.7.3

Indicator	Result After Alarm Condition
Green 'Power' LED	ON
Red 'SYSTEM ALARM' LED	ON
Text Screen	"ALARM MODULE # ZONE #
Yellow 'System Reset' LED	NOT APPLICABLE
Red 'Release' LEDs (for selected 'Release Zones')	NOT APPLICABLE
Audible Alarm	ON (continuously)
Red LED on each Alarm Module (P/N 21447)	ON (for selected 'Release Zones')
Enabled Auxiliary Alarm Outputs	Transfer state (normally open to closed; normally closed to open)

DETECTION SENSOR TESTING

Spot Heat Detectors: SHD sensors must be subjected to their pre-programed set point temperature. Use an electric heat gun to heat the sensor tip only to this set point. Set point temperatures are:

Bracket Mount SHD: 350ºF (177ºC) +/- 17ºF (167 to 186ºC)

Do not overheat any SHD by more than 100ºF over the set point. Overheating the unit beyond these limitations may cause the unit's set point to change from factory settings. Immediately remove the heat gun once the set point is reached. Verify that the results (from Table 4.7.3) have occurred on the Display Panel and Alarm Modules.

Reset: After the sensor has cooled below set point temperature, press the 'Alarm Silence' button located on the face of the Display Panel. The audible alarm will silence and the red 'Alarm

Silence' LED will illuminate. The system can now be reset by pressing the "Push to Reset" button located on the face of the Alarm Module. The green 'SYSTEM NORMAL' LED will illuminate. Repeat this test procedure for each Spot Heat Detector in the SafetyNet system.

INSPECTION & MAINTENANCE

Amerex SafetyNet System requires periodic care to provide maximum assurance that the system will operate effectively and safely. Inspection frequency should be based on the requirements of the equipment on which the fire suppression system will operate. Inspection and maintenance schedules are shown in this manual and must be followed to ensure reliable system performance. Equipment operating continually and/or in harsh environments will require more frequent inspection and maintenance. The latest revisions of any Amerex Installation, Operation, and Maintenance Manuals referenced in this chapter can be found at www.amerex-fire.com. **Note: All NFPA guidelines that are applicable to the system must be followed for service and maintenance. The following inspections and maintenance requirements are additional Amerex requirements**.

DAILY INSPECTION: OPERATOR / OWNER

- Verify that a green "OK" status LED is illuminated on the Operator Display Panel.

MONTHLY INSPECTION: OPERATOR/ OWNER

- Verify that all components are present and in their original location and securely fastened.
- All Protective Caps must be in place on Nozzle tips. Nozzle outlets must be unobstructed and properly aimed at the hazard(s) which are intended to be protected.
- Verify that ring pins are in place and secured with proper break away tamper indicator seals.
- Verify that all manual actuation devices are unobstructed by vehicle modifications or clutter.
- Verify that the maintenance tag or certificate is in place and up to date. Record the date of inspection and initials of inspector.
- Verify the physical condition of all components. Inspect for damage or conditions that may prevent operation.
- Inspect the Agent Cylinder Pressure Gage. The yellow pointer on the Agent Cylinder Pressure Gage must be in the green pie area.

- Verify that Dust Cap is installed on safety Rupture Disc on Agent Cylinder

If any service is required as a result of monthly inspections, it should be done only by an Amerex Certified and Authorized Servicing Technician.

SEMIANNUAL MAINTENANCE: AUTHORIZED AMEREX TECHNICIAN

The Amerex SafetyNet System must be serviced by an Authorized Amerex Technician who is trained and certified on the Amerex SafetyNet System and in accordance with NFPA and any federal, state, and/or local code requirements. Service and maintenance shall be done at intervals of **six (6) months** or more frequent if deemed necessary.

- Perform the monthly inspection procedure.
- Verify that hazards have not changed. Look for changes in vehicle operation or cleaning procedures that may have increased the hazard. Compare with the original vehicle hazard analysis.
- Examine and test all detection devices. Warning: Do not perform these tests on the system until all Linear Actuators are replaced with Fire Alarm Modules. Otherwise, a system discharge will result! Perform a visual inspection of each detector, detection network and discharge (release) network. During the visual inspection, verify no dents, dings, cracks, scorch marks from flames, or any other physical damage has occurred to any detector, component, or cable. Replace any suspect components. **If a build-up of grease, dust**, or any other foreign matter has accumulated on the detector or circuitry, clean with a vacuum or soft dry cloth.
- Examine the Agent Distribution Network. Look for signs of wear or chafing on network hoses. Replace any damaged hose sections.
- Purge the Agent Distribution Network with air or nitrogen only
- Inspect the Agent Cylinder. If Pressure Gage is bent or damaged, depressurize Cylinder and replace. Clean Cylinder to remove dirt, grease and foreign material. Make sure that instruction nameplates are securely fastened and legible. Inspect the Cylinder for corrosion, abrasion, and dents or damage.
- Remove and inspect control heads for damaged, missing, or substituted parts.
- Inspect and clean the top of the Agent Cylinder Valve.
- **Document all work completed during service for record retention**. Disclose any anomalies, deficiencies to the property owner for corrective action requirements.

TWO (2) YEAR MAINTENANCE

The internal Nickel Metal Hydride (NiMH) **backup battery installed in the SafetyNet Driver Panel** will require periodic replacement. Verify battery date shown on a label on the back side of the Driver Panel. If the battery is out of date or will be out of date before the next six months service, replace it and the Replacement Battery Label. Before replacing the backup battery or performing system maintenance, it is a safe practice to disconnect the main power and the actuation circuits. When should the battery be replaced?

- 2 years from the label date or date of the original installation.

- Battery Replacement Label is missing from front of panel area.
- A Backup Battery trouble event occurs.
- Low battery indicator on front of panel is illuminated.
- Label information is not legible.

The backup battery may be accessed by loosening 4 cover screws and removing the back cover. Take care not to damage the electronic components when maintaining the battery. Loosen the two screws holding the battery. Unplug the out-of-date battery from the pc board and dispose of properly. Plug in a new battery and secure with the original two screws. Replace back cover and secure with the four original screws. Place new label on back cover so that the four screws are covered. Write next battery replacement date on the label.

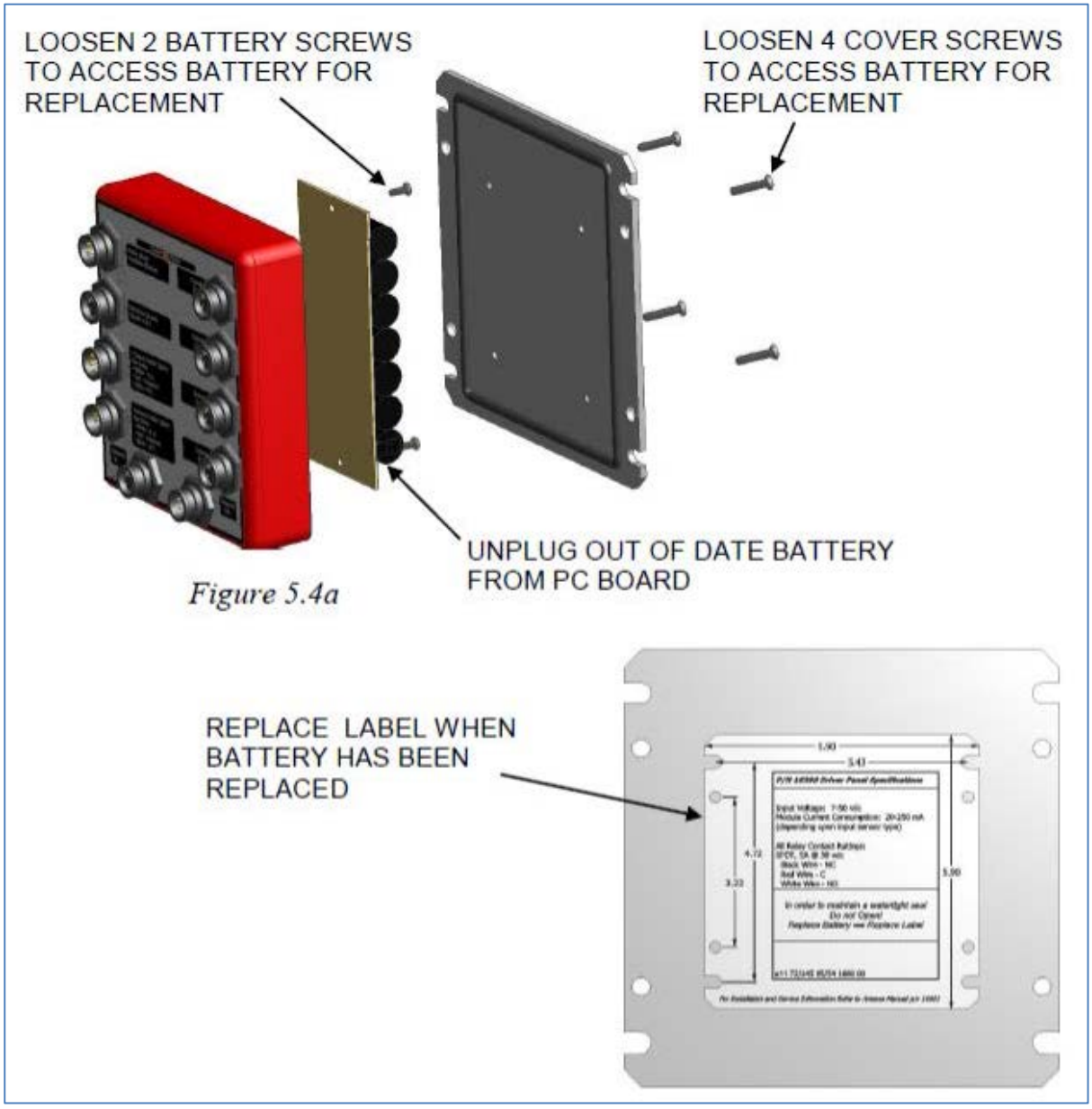

Figure 5.4a

SIX (6) YEAR MAINTENANCE: AUTHORIZED AMEREX TECHNICIAN

- Perform semiannual inspection.
- Replace Linear Actuators if in service for 6 years.
- Inspect the inside of adapters and hose end fittings of the Agent Distribution Network(s). Replace any corroded adapters and hose end fittings.
- Per NFPA 17 guidelines, stored pressure Dry Chemical Agent Cylinders must be depressurized for inspecting the inside of the Agent Cylinder, and the Agent. Agent must be free flowing. Inspect Agent Cylinders for damage, dents, abrasions or corrosion. If any of these conditions are found, replace the Agent Cylinder (see chapter 6 of manual *AMEREX P/N 13980 Rev C* for recharging instructions).

TWELVE (12) YEAR MAINTENANCE

- The Agent Cylinder requires a hydrostatic test every twelve years. The Agent Cylinder and all hose assemblies must be hydrostatically tested at a minimum of every 12 years in accordance with CGA Pamphlet C-6, NFPA 17, and DOT requirements. Test pressure can be found either in the latest version of manual *AMEREX* P/N 13980 Installation Operation, and Maintenance Manual (See Section 2.1), or on the Agent Cylinder nameplate. Date of Agent Cylinder manufacture is stamped on the Agent Cylinder dome. Hydrostatic testing may only be done by individuals certified to perform hydrostatic testing by those having jurisdiction in the particular area.
- Perform (6) six-year maintenance.

When hydrostatically testing Agent Cylinders, replace Agent Cylinder Valve with the Hydro test Adapter (AMEREX P/N 05152 or 23450). Connect a pressurization hose or network rated at or above the test pressure to the Hydro test Adapter. After hydrostatic testing is complete, a new Rupture Disc (AMEREX P/N 21793) MUST be reinstalled in its original location. Seal threads with a 24-hour epoxy. Reinstall a Dust Cap (AMEREX P/N 22973) over Rupture Disc.

SYSTEM ALARMS & TROUBLESHOOTING

Under normal working conditions, the green ‘Power’ LED on the Operator Panel will be illuminated. **If an alarm or trouble condition exists within the system the “Trouble” LED will be illuminated** and the text screen will display an alarm code or a fault code. **In the event of a fire the red “FIRE” LED will be illuminated, the audible alarm will sound**, and the fire relay will engage. These events are time stamped and recorded in the SafetyNet memory. The event log can be viewed or downloaded to a PC as Word documents for storage, trouble shooting. The event log can be accessed using the *AMEREX P/N 16609 SafetyNet Interface Module* and your personal computer using simple Windows pull down menus. For detailed explanations and user programming refer to SafetyNet Programming and Troubleshooting Manual AMEREX P/N 16602.

Event Type	Event Cause	Event Record	Operator Display	LED Indication	Audible Alarm
Trouble	Communications Error	No Response Invalid Response Invalid Module Missing Module Invalid command Software error	Trouble Module# Comm	Yellow Trouble Steady	Pulsed
Trouble	Sensor trouble	Sensor missing Sensor wrong Sensor disabled	Trouble Module# Sensor#	Yellow Trouble Steady	Pulsed
Trouble	Over-temperature level 1	Variable Overheat Sensor Level 1 Exceeded		Yellow Trouble Steady	Single Pulse
Trouble	Over-temperature level 2	Variable Overheat Sensor Level 2 Exceeded		Yellow Trouble Steady	Steady On
Trouble	Discharge	Open Circuit at Actuator	Trouble Module# Discharge	Yellow Trouble Steady	Pulsed
Trouble	Pressure low	Open Circuit at Pressure Switch Input	Trouble Module# Press. Low	Yellow Trouble Steady	Pulsed
Trace Gas	20% to 50% Gas Level	Trace Gas Level Exceeded	Trace Gas Module# Sensor#	Yellow Trace Flashing	Pulsed
Significant Gas	50%+ Gas Level	Significant Gas Level Exceeded	Significant Gas Module# Sensor#	Red Significant Steady	Steady On
Fire	Fire	Fire	FIRE Module# Sensor#	Red Fire Steady	Steady On
None	System	Clock set Configuration written Configuration erased Configuration reset Self-test Relays cleared Alarm silenced Reset (at power-on) User reset (logo button) Event log erased Configuration mismatch Power failure Maintenance schedule set Maintenance schedule reset	None	No	No

Note: Gas detection feature is not available.

EVENT DEFINITIONS

- Module Communications Error – These errors consist of network errors. An error in data transmission or interruption in the data network will cause a Comm Error. Check all data cables and verify proper system configuration.
- Sensor Trouble – This could indicate one of several problems:
  - A system sensor in the SafetyNet configuration is missing
  - A system sensor is different than the SafetyNet configuration
  - A system sensor is damaged or disabled
  - Sensor wiring is broken or disconnected
- Over-temperature level 1 – Variable Overheat Sensor warning level 1 is exceeded. The Programmable Heat Detector sensor temperature level is set at the module level. If this level is exceeded, the event will be recorded and will be indicated by a yellow Trouble LED and pulsed audible alarm.
- Over-temperature level 2 – Variable Overheat Sensor warning level 2 is exceeded. The sensor temperature level is set at the module level. If this level is exceeded, the event will be recorded.
- Actuator Fault - This could indicate a disconnected actuator cable, open wire in the actuator cable, open or activated actuator.
- Pressure Low – Open circuit at the agent cylinder pressure switch. This could indicate a disconnected pressure switch cable, or open wire in the pressure switch circuit.
- Fire – A sensor has recorded a Fire event.
- System – There are a number of things that are recorded as System Events. Any user interaction with the Operator Display or Configuration adjustments is recorded as a System Event.

SAFETYNET INTERFACE MODULE (AMEREX P/N 16609)

The SafetyNet Interface Module includes both Male and Female connectors and is supplied with a Gas Sensor Cable (AMEREX P/N 14925) which can be installed to fit either Male or Female SafetyNet output ports. Each SafetyNet installation will end up with two unused communication ports – either Male or Female - at the first and last modules in the system.

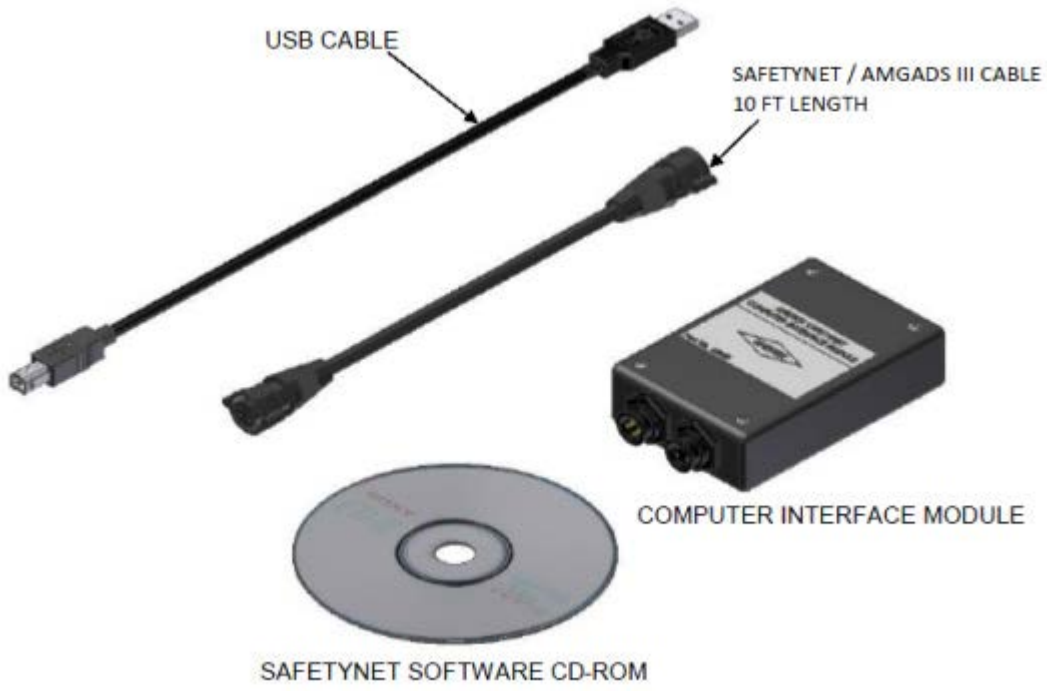

OTHER INFORMATION

You will find detailed information on other topics in **Amerex Vehicle Fire Suppression System_Installation Operation Maintenance Manual_13980** such as:

- Electric Control Head installation
- Cylinder recharge instruction
- Hydro test Adapter

PARTS / WASTE DISPOSAL

Discard according to applicable environmental regulations (Municipal/State[Prov.]/ Federal)

Access all our Service Bulletins on http://techpub.prevostcar.com/en/
Or scan the QR-Code with your smart phone
.

Are you a vehicle owner?
*E-mail us at **technicalpublications_prev@volvo.com** and type "ADD" in the subject to receive warranty bulletins applicable to your vehicle(s) by e-mail.*