Revisions to this document are noted by a stripe in the left-hand margin



SUBJECT: Transmission Fluid/Filter Change Recommendations

MODELS AFFECTED: All Commercial On-Highway Products, AT 500 Series, MT 600 Series, HT 700 Series, 1000 and 2000 Product Families Transmissions, 3000 Product Families Transmissions (includes B300/400 and T200/300), 4000 Product Families Transmissions (includes B500 and T400/500), TC10, H 40/50 EP™ Products

## Introduction:

Optimum performance and reliability of heavy-duty automatic transmissions can be noticeably influenced by the type of fluid used and the frequency with which that fluid is changed. Allison Transmission has designed extensive programs including specifications and tests to verify the quality of fluids and consequently have specific fluid and filter change recommendations. Due to field studies, changes in emission requirements, vehicle design, and operating environments, Allison Transmission has realigned recommended fluid and filter change intervals. Heavy-duty Automatic Transmission change intervals have been revised to more closely match today's operating environments.

## Model Year 2009 and 2010 Prognostics:

Prognostics that monitor and maximize fluid and filter life were offered in Model Year 2009 for 1000/2000/3000/4000 Product Families Transmissions. 3000/4000 Product Families Transmissions began using Prognostics with serial numbers 6510822005 (3000), 6520099957 (3000), 6610257671 (4000), 6620007438 (4000). 1000/2000 Product Families Transmission Prognostics were first available in July of 2008 (MY2009). **MY2009 Allison Prognostics must only be used with Allison Approved TES 295 or TES 468 fluids**. January 2010 Allison Prognostics are compatible with TES 295, TES 468 and TES 389 approved fluids in 3000/4000 Product Families Transmissions starting with TCM calibration CIN 4C or later (4C-xxxxx-yyy-z) and all January 2010 1000/2000 Product Families Transmissions.

All 3000/4000 Product Families Transmissions utilizing Prognostics require the use of Allison High-Capacity filters. All 1000/2000 Product Families Transmissions utilizing Prognostics require the use of Allison Control Main Spin-On filter, P/N 29539579. 1000/2000/3000/4000 Product Families Transmissions may or may not have this feature "enabled" or turned ON. This option requires that the OEM provide the wiring necessary and the feature enabled in the TCM. Refer to the appropriate Operator's Manual for the methods of identifying if Prognostics is enabled.

**Refer to Table 4 for Filter/Fluid Change Intervals/Fluid Capacities by Product Family.**



Copyright © 2018 Allison Transmission, Inc. All Rights Reserved.

*Please Note: Allison Transmission Service Information Letters are intended for use by professional, trained technicians, not for the "do-it-yourselfer." They are written to inform those technicians of conditions that may occur on some transmission models (or serial numbers ranges) or to provide information that could assist in the proper servicing of a specific Allison transmission. Properly trained technicians have the equipment, tools, safety instructions, and know-how to do a job properly and safely. If a condition is described, do not assume that the Service Information Letter applies to your transmission, or that your transmission has the condition described. Product evolution and information updates are inevitable. Please see your authorized Allison Transmission service dealer or distributor to understand if your particular transmission may benefit from the information contained within the Service Information Letter.*

## Fluids and Specifications:

Fluid types are defined by applicable performance specification. The following transmission fluid types are approved for use in Allison Commercial On-Highway transmission products.

| Fluid Type | Recommended (Intended) Usage |
|---|---|
| ***TES 295 and TES 468 Fluids***<br>• See *www.allisontransmission.com* for a list of Allison Approved TES 295 and TES 468 fluids | • General or severe duty<br>• Extended change interval (4) (required)<br>• Extended Transmission Coverage (ETC) policy (required)<br>• Prognostics (required) MY2009<br>• TES 468 fluids are required for H 40/50 EP™ products |
| ***Allison Approved Non-TES 295 and Non-TES 468 Fluids (1)(2)***<br>• Schedule One TES 389*<br>• Military specification fluids (for use in Military Vehicles Only) (3)<br>* See *www.allisontransmission.com* for a list of Allison Approved TES 389 fluids | • General or severe duty<br>• Standard change interval (4)<br>• Prognostics MY2010 (5) |
| (1) TES 228 (C4 type) fluids are no longer approved for use in Commercial On-Highway transmission products and have been removed from the Allison Approved Non-TES 295 and Non-TES 468 fluids list.<br>(2) DEXRON®-III and DEXRON®-VI fluids are no longer approved for use in Commercial On-Highway transmission products and have been removed from the Allison Approved Non-TES 295 or Non-TES 468 fluids list.<br>(3) Military specification fluids are approved for use in Military Applications in 3000, 4000, AT, MT, and HT Series products only, and are strictly prohibited from use in 1000 and 2000 Product Families transmission products.<br>(4) Fluid and filter change intervals are based on transmission model, vocation (duty cycle), and fluid type (see attached charts). NOTE: Fluid drain intervals are based on 100 percent fill with Allison approved fluids. Fluid change intervals may be adjusted based on fluid analysis and fleet data. Refer to Service Information Letter (SIL) 17-TR-96 for details.<br>(5) Prognostics are available with Allison Approved TES 295, TES 468 and TES 389 fluids only. | |

**Local conditions, severity of operation or duty cycle may require more or less frequent fluid change intervals that differ from the published recommended fluid change intervals of Allison Transmission. Allison Transmission recommends that customers use fluid analysis as the primary method for determining fluid change intervals. In the absence of a fluid analysis program the fluid change intervals listed in the charts must be used.**

**For information concerning models not listed in this publication, please call the Allison Technical Assistance Center at 1-800-252-5283.**

Refer to the latest revision of Allison publication number GN2055EN, “Technicians’ Guide to Automatic Transmission Fluid”, and SIL 17-TR-96 for additional information on oil analysis and general knowledge about transmission fluids.

## Transmissions Not OEM Factory Filled with TES 295 or TES 468 Fluids:

New vehicles delivered from the OEM with a mixture of TES 295 or TES 468 fluid and Allison Approved Non-TES 295 or Non-TES 468 fluids must follow fluid/filter change recommendations for Allison Approved Non-TES 295 or Non-TES 468 fluids outlined in flow charts. If the customer fills the transmission with Allison Approved TES 295 or TES 468 fluid, the change recommendations of Allison Approved Non-TES 295 or Non-TES 468 fluids must

Copyright © 2018 Allison Transmission, Inc. All Rights Reserved.

be followed. Upon the second oil change, if the customer reinstalls TES 295 or TES 468, the fluid/filter change recommendations outlined in 100 percent TES 295 or TES 468 approved fluids must be followed. H 40/50 EP™ Products require OEM factory TES 468 fluids.

### Fluid Exchange:

Fluid exchanging machines are not recommended or recognized due to variation and inconsistencies that may not guarantee removal of 100 percent of the used fluid.

### 3000/4000 Product Families and H 40/50 EP™ Filters:

New high-capacity filters were released into production beginning with:

6510670912 (3000) 6610205144 (4000) 7110001551 (H 40/50 EP™) 6520067342 (3000) 6620002521 (4000)

### 3000/4000 Product Families Transmissions Elimination of Initial Filter Change Requirement and Kit:

Transmissions equipped with Allison high-capacity filters do not require an initial main filter change at 5000 miles/8000 km/200 hours. However, serial numbers prior to those numbers listed above, Allison Transmission requires the initial filter change interval. An initial main filter kit P/N 29540495 (2 inch) or kit P/N 29540496 (4 inch) contains only one Gold series filter and all necessary seals and gaskets to perform the first 5000 mile/8000 km/200 hour main filter change. These kits have been completely cancelled. Once stock has been depleted, it will be necessary to order the high-capacity filter from the Allison Parts Distribution Center.

### High-Capacity Filters:

Allison 3000/4000 Product Families and H 40/50 EP™ high-capacity filters were released into production beginning July 2006. High-capacity filters allow extended filter change intervals when used with Allison Approved TES 295 or TES 468 fluid. High-capacity service filters can be identified by P/N 29558294 or P/N 29558295 stamped into the filter end cap. Previous Allison 3000/4000 Product Families and H 40/50 EP™ filters can be identified by P/N 29538231 or P/N 29538232 stamped into the filter end cap.

**Table 1. Filter Kits**

| Product Families | Gold Series Filter Kit (Former) | High-Capacity Filter Kit (Current) |
|---|---|---|
| 3000/4000 | 29540493 (2 inch) | 29558328 (2 inch) |
| | 29540494 (4 inch) | 29558329 (4 inch) |
| H 40/50 EP™ | 29541508 | 29545785 |

**NOTE:** Extended 3000/4000 Product Families transmissions Allison Approved TES 295 or TES 468 fluid and filter change intervals are only allowed with Allison high-capacity filters. Filters must be changed at or before recommended intervals.

When replacing Gold series filters with high-capacity filters in transmissions containing 100 percent Allison Approved TES 295 or TES 468, it is allowed to follow high-capacity fluid and filter change intervals.

Copyright © 2018 Allison Transmission, Inc. All Rights Reserved.

## Initial Transmission Filter Change Schedule (Production/ReTran®)

*3000 and 4000 Product Families Transmissions — Main Filter 5000 miles (8000 km)/200 hours

*3000 and 4000 Product Families Transmission ReTran® — Main Filter 5000 miles (8000 km)/200 hours

H 40/50 EP™ Products Spin-On Control Main Filter 5000 miles (8000 km)/200 hours

AT Auxiliary Filter 5000 miles (8000 km)/200 hours

MT Auxiliary Filter 5000 miles (8000 km)/200 hours

*Not required beginning with S/N 6510670912, S/N 6610205144, S/N 6520067342, S/N 6620002521, and S/N 9320005689, S/N 9370006284, S/N 9420006679, S/N 9470005459

## 1000, 2000, 3000, 4000 Product Families Hours vs. Miles Chart

Table 2 (2000/3000 Hour Based Maintenance) and Table 3 (4000/6000 Hour Based Maintenance) list the equivalent mileage based on the Allison recommended change intervals for Allison Approved TES 295 or TES 468 approved fluids. For example, vocations or vehicles that operate with a high density shift cycle typically reach the 6000/3000 hour change limit **before** the recommended mileage limit.

An example could be a transit bus equipped with a B500R that operates an average of 7 mph (11 km/h). Recommended fluid/filter change interval for a B500R equipped with 2 inch control module in a transit vocation using a TES 295 or TES 468 fluid is 150,000 miles/240 000 km/6000 hours or 48 months whichever occurs first. Using Table 3 Hours vs. Miles, a vehicle operating at 7 mph (11 km/h) will travel approximately 42,000 miles (66 000 km) in 6000 hours. If an odometer is used to determine when to change the transmission fluid and filters, this specific vehicle would change the fluid every 42,000 miles (66 000 km) and filters every 21,000 miles (33 000 km).

Estimating average mph can be approximated by dividing total distance traveled in a typical day by the hours elapsed during that total distance. An example would be a vehicle that operates on average 96 miles (155 km) a day over an 8 hour period would average 12 mph (19 km/h).

Copyright © 2018 Allison Transmission, Inc. All Rights Reserved.

**Table 2. 2000 and 3000 Hour Based Maintenance — Hours vs. Miles**

| 2000 Hour Based Maintenance | | | | 3000 Hour Based Maintenance | | | |
|---|---|---|---|---|---|---|---|
| km/h Average | km Equivalent | MPH Average | miles Equivalent | km/h Average | km Equivalent | MPH Average | miles Equivalent |
| 5 | 10000 | 3 | 6000 | 5 | 15000 | 3 | 9000 |
| 6 | 12000 | 4 | 8000 | 6 | 18000 | 4 | 12000 |
| 8 | 16000 | 5 | 1000 | 8 | 24000 | 5 | 15000 |
| 10 | 20000 | 6 | 12000 | 10 | 30000 | 6 | 18000 |
| 11 | 22000 | 7 | 14000 | 11 | 33000 | 7 | 21000 |
| 13 | 26000 | 8 | 16000 | 13 | 39000 | 8 | 24000 |
| 14 | 28000 | 9 | 18000 | 14 | 42000 | 9 | 27000 |
| 16 | 32000 | 10 | 20000 | 16 | 48000 | 10 | 30000 |
| 18 | 36000 | 11 | 22000 | 18 | 54000 | 11 | 33000 |
| 19 | 38000 | 12 | 24000 | 19 | 57000 | 12 | 36000 |
| 21 | 42000 | 13 | 26000 | 21 | 63000 | 13 | 39000 |
| 23 | 46000 | 14 | 28000 | 23 | 69000 | 14 | 42000 |
| 24 | 48000 | 15 | 30000 | 24 | 72000 | 15 | 45000 |
| 26 | 52000 | 16 | 32000 | 26 | 78000 | 16 | 48000 |
| 27 | 54000 | 17 | 34000 | 27 | 81000 | 17 | 51000 |
| 29 | 58000 | 18 | 36000 | 29 | 87000 | 18 | 54000 |
| 31 | 62000 | 19 | 38000 | 31 | 93000 | 19 | 57000 |
| 32 | 64000 | 20 | 40000 | 32 | 96000 | 20 | 60000 |
| 34 | 68000 | 21 | 42000 | 34 | 102000 | 21 | 63000 |
| 35 | 70000 | 22 | 44000 | 35 | 105000 | 22 | 66000 |
| 37 | 74000 | 23 | 46000 | 37 | 111000 | 23 | 69000 |
| 39 | 78000 | 24 | 48000 | 39 | 117000 | 24 | 72000 |
| 40 | 80000 | 25 | 50000 | 40 | 120000 | 25 | 75000 |

Copyright © 2018 Allison Transmission, Inc. All Rights Reserved.

**Table 3. 4000 and 6000 Hour Based Maintenance — Hours vs. Miles**

| 4000 Hour Based Maintenance | | | | 6000 Hour Based Maintenance | | | |
|---|---|---|---|---|---|---|---|
| km/h Average | km Equivalent | MPH Average | miles Equivalent | km/h Average | km Equivalent | MPH Average | miles Equivalent |
| 5 | 20000 | 3 | 12000 | 5 | 30000 | 3 | 18000 |
| 6 | 24000 | 4 | 16000 | 6 | 36000 | 4 | 24000 |
| 8 | 32000 | 5 | 20000 | 8 | 48000 | 5 | 30000 |
| 10 | 40000 | 6 | 24000 | 10 | 60000 | 6 | 36000 |
| 11 | 44000 | 7 | 28000 | 11 | 66000 | 7 | 42000 |
| 13 | 52000 | 8 | 32000 | 13 | 78000 | 8 | 48000 |
| 14 | 56000 | 9 | 36000 | 14 | 84000 | 9 | 54000 |
| 16 | 64000 | 10 | 40000 | 16 | 96000 | 10 | 60000 |
| 18 | 72000 | 11 | 44000 | 18 | 108000 | 11 | 66000 |
| 19 | 76000 | 12 | 48000 | 19 | 114000 | 12 | 72000 |
| 21 | 84000 | 13 | 52000 | 21 | 126000 | 13 | 78000 |
| 23 | 92000 | 14 | 56000 | 23 | 138000 | 14 | 84000 |
| 24 | 96000 | 15 | 60000 | 24 | 144000 | 15 | 90000 |
| 26 | 104000 | 16 | 64000 | 26 | 156000 | 16 | 96000 |
| 27 | 108000 | 17 | 68000 | 27 | 162000 | 17 | 102000 |
| 29 | 116000 | 18 | 72000 | 29 | 174000 | 18 | 108000 |
| 31 | 124000 | 19 | 76000 | 31 | 186000 | 19 | 114000 |
| 32 | 128000 | 20 | 80000 | 32 | 192000 | 20 | 120000 |
| 34 | 136000 | 21 | 84000 | 34 | 204000 | 21 | 126000 |
| 35 | 140000 | 22 | 88000 | 35 | 210000 | 22 | 132000 |
| 37 | 148000 | 23 | 92000 | 37 | 222000 | 23 | 138000 |
| 39 | 156000 | 24 | 96000 | 39 | 234000 | 24 | 144000 |
| 40 | 160000 | 25 | 100000 | 40 | 240000 | 25 | 150000 |

Copyright © 2018 Allison Transmission, Inc. All Rights Reserved.

**Table 4. Filter/Fluid Change Intervals/Fluid Capacities**

| | | | |
|---|---|---|---|
| **1000/ 2000 Product Families** | Filter | Change Intervals | Refer to Appendix A |
| | | Filter Types and Part Numbers | Refer to Appendix A |
| | Fluid | Change Intervals | Refer to Appendix A |
| | | Fluid Capacity | Refer to Appendix A |
| **3000/ 4000 Product Families** | Filter | Change Intervals | Refer to Appendix B |
| | | Filter and Gasket Kits | Refer to Appendix B |
| | Fluid | Change Intervals | Refer to Appendix B |
| | | Fluid Capacity | Refer to Appendix B |
| | | Additional Fill for Allison Coolers/Accumulators | Refer to Appendix B |
| **TC10** | Filter | Change Intervals | Refer to Appendix C |
| | | Filter and Gasket Kits | Refer to Appendix C |
| | Fluid | Change Intervals | Refer to Appendix C |
| | | Fluid Capacity | Refer to Appendix C |
| **H 40/ 50 EP™ Products** | Filter | Change Intervals | Refer to Appendix D |
| | | Filter and Gasket Kits | Refer to Appendix D |
| | Fluid | Change Intervals | Refer to Appendix D |
| | | Fluid Capacity | Refer to Appendix D |
| **AT 500 Series** | Filter | Change Intervals | Refer to Appendix E |
| | | Filter and Gasket Kits | Refer to Appendix E |
| | Fluid | Change Intervals | Refer to Appendix E |
| | | Fluid Capacity | Refer to Appendix E |
| **MT 600 Series** | Filter | Change Intervals | Refer to Appendix F |
| | | Filter and Gasket Kits | Refer to Appendix F |
| | Fluid | Change Intervals | Refer to Appendix F |
| | | Fluid Capacity | Refer to Appendix F |
| **HT 700 Series** | Filter | Change Intervals | Refer to Appendix G |
| | | Filter and Gasket Kits | Refer to Appendix G |
| | Fluid | Change Intervals | Refer to Appendix G |
| | | Fluid Capacity | Refer to Appendix G |

Copyright © 2018 Allison Transmission, Inc. All Rights Reserved.

# Appendix A. 1000/2000 Filter Change/Fluid Change Intervals

**Table 5. Recommended Filter Change/Fluid Change Intervals — No Prognostics or when Prognostics is NOT Enabled/Turned OFF**

**NOTE:** Refer to Table 9 for Filter Type/Part Number Information and Table 10 for Fluid Capacity Information.

**NOTE:** Change filters/fluid at or before recommended mileage, months, or hours have elapsed, whichever occurs first.

**NOTE:** Local conditions, severity of operation or duty cycle may require more or less frequent fluid change intervals that differ from the published recommended fluid change intervals of Allison Transmission. Allison Transmission recommends that customers use fluid analysis as the primary method for determining fluid change intervals. In the absence of a fluid analysis program the fluid change intervals listed in the charts should be used.

| **Filter Change Intervals, No Prognostics or when Prognostics is NOT Enabled/Turned OFF** | | | | | | | |
|---|---|---|---|---|---|---|---|
| **100 Percent Concentration Allison Approved TES 295 or TES 468 Fluids*** | | | **Allison Approved Schedule One TES 389 Fluids†** | | | | |
| **Control Main Filter** | **Internal Filter** | **Lube/ Auxiliary Filter** | **Control Main Filter** | | **Internal Filter** | **Lube/Auxiliary Filter** | |
| **General**** or **Severe***** 50,000 Miles (80 000 km) 2000 Hours 24 Months | Overhaul | **General**** or **Severe***** 50,000 Miles (80 000 km) 2000 Hours 24 Months | **General**** 50,000 Miles (80 000 km) 2000 Hours 24 Months | **Severe***** 12,000 Miles (20 000 km) 500 Hours 6 Months | Overhaul | **General**** 50,000 Miles (80 000 km) 2000 Hours 24 Months | **Severe***** 12,000 Miles (20 000 km) 500 Hours 6 Months |
| **Fluid Change Intervals, No Prognostics or when Prognostics is NOT Enabled/Turned OFF** | | | | | | | |
| **100 Percent Concentration Allison Approved TES 295 or TES 468 Fluids*** | | | **Allison Approved Schedule One TES 389 Fluids†** | | | | |
| **General**** 150,000 Miles (240 000 km) 4000 Hours 48 Months | **Severe***** 75,000 Miles (120 000 km) 3000 Hours 36 Months | | **General**** 50,000 Miles (80 000 km) 2000 Hours 24 Months | **Severe***** 12,000 Miles (20 000 km) 500 Hours 6 Months | | | |

* Anything other than 100 percent concentration of Allison Approved TES 295 or TES 468 fluid is considered a mixture and should utilize Schedule One TES 389 change intervals.
† See *www.allisontransmission.com* for a list of Allison Approved TES 389 fluids.
** General Vocation: All other vocations.
*** Severe Vocation: On/Off Highway, Refuse, City Transit, and Shuttle Transit. Duty cycles greater than one (1) stop per mile.

Copyright © 2018 Allison Transmission, Inc. All Rights Reserved.

**Table 6. Recommended Filter Change/Fluid Change Intervals — Prognostics "ON" in MY2009 TCM Calibrations**

**NOTE:** Refer to Table 9 for Filter Type/Part Number Information and Table 10 for Fluid Capacity Information.

| Filter Change Intervals, Prognostics "ON" in MY2009 TCM Calibrations * | | |
|---|---|---|
| **REQUIRED ** 100 Percent Concentration Allison Approved or TES 468 Fluids and Allison Control Main Filter (29539579) ** REQUIRED** | | |
| **General or Severe** | | |
| **Control Main Filter** | **Internal Filter** | **Lube/Auxiliary Filter** |
| Change filters when indicated by controller or 48 months, whichever occurs first. | Overhaul | Change filters when indicated by controller or 48 months, whichever occurs first. |
| **Fluid Change Intervals, Prognostics "ON" in MY2009 TCM Calibrations *** | | |
| **REQUIRED ** 100 Percent Concentration Allison Approved TES 295 or TES 468 Fluids and Allison Control Main Filter (29539579) ** REQUIRED** | | |
| **General or Severe** | | |
| Change fluid when indicated by controller or 48 months, whichever occurs first. | | |
| * If Prognostics is turned "OFF" or NOT calibrated in TCM, refer to Table 5 for fluid change intervals.<br>** Less than 100 percent concentration of TES 295 or TES 468 Allison approved fluids is considered a mixture and shall not be used with Prognostics or this change schedule. | | |

**Table 7. Recommended Filter Change/Fluid Change Intervals — Prognostics "ON" in MY2010 TCM Calibrations**

**NOTE:** Refer to Table 9 for Filter Type/Part Number Information and Table 10 for Fluid Capacity Information.

**NOTE:** This schedule to be used with MY2010 1000/2000 Product Family Transmissions and TES 389.

| Filter Change Intervals, Prognostics "ON" in MY2010 TCM Calibrations * | | |
|---|---|---|
| **REQUIRED — Allison Control Main Filter (29539579) — REQUIRED** | | |
| **General or Severe** | | |
| **Control Main Filter** | **Internal Filter** | **Lube/Auxiliary Filter** |
| Change filters when indicated by controller or 24 months, whichever occurs first. | Overhaul | Change filters when indicated by controller or 24 months, whichever occurs first. |
| **Fluid Change Intervals, Prognostics "ON" in MY2010 TCM Calibrations *** | | |
| **REQUIRED — TES 389 or Mixtures of TES 295 and TES 468 Fluids and Allison Control Main Filter (29539579) — REQUIRED** | | |
| **General or Severe** | | |
| Change fluid when indicated by controller or 24 months, whichever occurs first. | | |
| * If Prognostics is turned "OFF" or NOT calibrated in TCM, refer to Table 5 for fluid change. | | |

Copyright © 2018 Allison Transmission, Inc. All Rights Reserved.

**Table 8. Recommended Filter Change/Fluid Change Intervals — Prognostics "ON" in MY2010 TCM Calibrations**

**NOTE:** Refer to Table 9 for Filter Type/Part Number Information and Table 10 for Fluid Capacity Information.

**NOTE:** This schedule to be used with MY2010 1000/2000 Product Family Transmissions and TES 295 or TES 468.

| **Filter Change Intervals, Prognostics "ON" in MY2010 TCM Calibrations *** | | |
|---|---|---|
| **REQUIRED — TES 295 or TES 468 Fluids and Allison Control Main Filter (29539579) — REQUIRED** | | |
| **General or Severe** | | |
| **Control Main Filter** | **Internal Filter** | **Lube/Auxiliary Filter** |
| Change filters when indicated by controller or 48 months, whichever occurs first. | Overhaul | Change filters when indicated by controller or 48 months, whichever occurs first. |
| **Fluid Change Intervals, Prognostics "ON" in MY2010 TCM Calibrations *** | | |
| **REQUIRED — TES 295 or TES 468 Fluids and Allison Control Main Filter (29539579) — REQUIRED** | | |
| **General or Severe** | | |
| Change fluid when indicated by controller or 48 months, whichever occurs first. | | |
| * If Prognostics is turned "OFF" or NOT calibrated in TCM, refer to Table 5 for fluid change. | | |

**Table 9. Filter Type/Part Number**

| **Filters** | |
|---|---|
| **Filter Type** | **Part Number** |
| Control Main | 29539579 |
| Pan Suction (Shallow)* | 29542833, 29537965** |
| Pan Suction (Deep)* | 29542824 |

* Overhaul Only
** See SIL 12-1K2K-10, Interchangeability of the Shallow Sump Filters

**Table 10. Fluid Capacity**

**NOTE:** Approximate Fluid Loss for Control Main Filter (Spin-On) = 0.47 liters (1 pint)

| **Capacities (Approximate) *** | | |
|---|---|---|
| Sump Type | Initial Fill** | Refill** |
| | Liters (Quarts) | Liters (Quarts) |
| Standard | 14 (14.8) | 10 (10.6) |
| Shallow | 12 (12.7) | 7 (7.4) |

* Fluid fill capacity is dependent on vehicle configuration. Final fluid capacity must be determined by dipstick level (see Mechanic's Tips MT3190EN, MT4007EN Section 1 or your Operator's Manual under "Care and Maintenance".
** Approximate quantities, do not include external lines, cooler, and hose.

Copyright © 2018 Allison Transmission, Inc. All Rights Reserved.

# Appendix B. 3000/4000 Filter Change/Fluid Change Intervals

**Table 11. Recommended Filter Change/Fluid Change Intervals — Allison High-Capacity Filters — No Prognostics or when Prognostics is NOT Enabled/Turned OFF**

**NOTE:** Refer to Table 15 for Filter and Gasket Kit Information, Table 16 for Fluid Capacity Information, Table 17 for Additional Fill for Allison Coolers/Accumulators, and Figure 1 for Drain Plug Location, Filter Locations, and Control Module Dimensions.

**NOTE:** Change filters/fluid at or before recommended mileage, months, or hours have elapsed, whichever occurs first.

**NOTE:** Local conditions, severity of operation or duty cycle may require more or less frequent fluid change intervals that differ from the published recommended fluid change intervals of Allison Transmission. Allison Transmission recommends that customers use fluid analysis as the primary method for determining fluid change intervals. In the absence of a fluid analysis program the fluid change intervals listed in the charts should be used.

| **Filter Change Intervals, No Prognostics or when Prognostics is NOT Enabled/Turned OFF** | | | | | | | |
|---|---|---|---|---|---|---|---|
| **100 Percent Concentration Allison Approved TES 295 or TES 468 Fluids*** | | | **Allison Approved Non-TES 295 or Non-TES 468 Fluids*** | | | | |
| **Main Filter** | **Internal Filter** | **Lube Filter** | **Main Filter** | | **Internal Filter** | **Lube Filter** | |
| **General**** or **Severe***** 75,000 Miles (120 000 km) 3000 Hours 36 Months | Overhaul | **General**** or **Severe***** 75,000 Miles (120 000 km) 3000 Hours 36 Months | **General**** 25,000 Miles (40 000 km) 1000 Hours 12 Months | **Severe***** 12,000 Miles (20 000 km) 500 Hours 6 Months | Overhaul | **General**** 25,000 Miles (40 000 km) 1000 Hours 12 Months | **Severe***** 12,000 Miles (20 000 km) 500 Hours 6 Months |
| **Fluid Change Intervals, No Prognostics or when Prognostics is NOT Enabled/Turned OFF** | | | | | | | |
| **100 Percent Concentration Allison Approved TES 295 or TES 468 Fluids*** | | | **Allison Approved Non-TES 295 or Non-TES 468 Fluids*** | | | | |
| **General**** 300,000 Miles (480 000 km) 6000 Hours 48 Months | | **Severe***** 150,000 Miles (240 000 km) 6000 Hours 48 Months | **General**** 25,000 Miles (40 000 km) 1000 Hours 12 Months | | **Severe***** 12,000 Miles (20 000 km) 500 Hours 6 Months | | |

* Less than 100 percent concentration Allison Approved TES 295 or TES 468 fluid is considered a mixture and should utilize Allison Approved Non-TES 295 or Non-TES 468 fluids change intervals.
** General Vocation: Intercity Coach with duty cycle less than or equal to one (1) stop per mile and all other vocations not listed in severe vocation.
*** Severe Vocation: All Retarders, On/Off Highway, Refuse, Transit, and Intercity Coach with duty cycle greater than one (1) stop per mile.

Copyright © 2018 Allison Transmission, Inc. All Rights Reserved.

**Table 12. Recommended Filter Change/Fluid Change Intervals — Allison High-Capacity Filters — Allison Approved TES 295 or TES 468 Fluids — Prognostics "ON"**

**NOTE:** Refer to Table 15 for Filter and Gasket Kit Information, Table 16 for Fluid Capacity Information, Table 17 for Additional Fill for Allison Coolers/Accumulators, and Figure 1 for Drain Plug Location, Filter Locations, and Control Module Dimensions.

**NOTE:** Allison Approved TES 295 Fluids schedule to be used with Prognostics "ON" beginning with eligible S/N 6510822005, S/N 6520099957, S/N 6610257671, S/N 6620007438.

| **Filter Change Intervals, 100 Percent Concentration Allison Approved TES 295 or TES 468 Fluids, Prognostics "ON" *** | | |
|---|---|---|
| **REQUIRED **100 Percent Concentration Allison Approved TES 295 or TES 468 Fluids and Allison High-Capacity Filters** REQUIRED** | | |
| **General or Severe** | | |
| **Main Filter** | **Internal Filter** | **Lube Filter** |
| Change filters when indicated by controller between fluid changes or 60 months, whichever occurs first. | Overhaul | Change filters when indicated by controller between fluid changes or 60 months, whichever occurs first. |
| **Fluid Change Intervals, 100 Percent Concentration Allison Approved TES 295 or TES 468 Fluids, Prognostics "ON" *** | | |
| **REQUIRED **100 Percent Concentration Allison Approved TES 295 or TES 468 Fluids and Allison High-Capacity Filters** REQUIRED** | | |
| **General or Severe** | | |
| Change fluid when indicated by controller or 60 months, whichever occurs first. Replace filters with fluid. | | |
| * If prognostics is turned "OFF " or Not Calibrated in TCM after serial numbers listed above, refer to Table 11 for fluid change intervals.<br>** Less than 100 percent concentration of TES 295 or TES 468 Allison Approved fluids is considered a mixture and shall not be used with Prognostics or this change schedule. Refer to Table 11 for utilization of Allison Approved Non-TES 295 or Non-TES 468 fluids change intervals. | | |

Copyright © 2018 Allison Transmission, Inc. All Rights Reserved.

**Table 13. Recommended Filter Change/Fluid Change Intervals — Allison High-Capacity Filters — TES 389 or Mixture of TES 389 and TES 295 or TES 468 Fluids — Prognostics "ON"**

**NOTE:** Refer to Table 15 for Filter and Gasket Kit Information, Table 16 for Fluid Capacity Information, Table 17 for Additional Fill for Allison Coolers/Accumulators, and Figure 1 for Drain Plug Location, Filter Locations, and Control Module Dimensions.

**NOTE:** TES 389 schedule to be used with MY2010 Prognosis "ON" and requires TCM calibration CIN 4C or later (4C-xxxxx-yyy-z).

| **Filter Change Intervals, TES 389 or Mixture of TES 389 and TES 295 or TES 468 Fluids, Prognostics "ON" *** | | |
|---|---|---|
| **REQUIRED — TES 389 or Mixture of TES 389 and TES 295 or TES 468 Allison Approved Fluids and Allison High-Capacity Filters — REQUIRED** | | |
| **General or Severe** | | |
| **Main Filter** | **Internal Filter** | **Lube Filter** |
| Change filters when indicated by controller between fluid changes or 24 months, whichever occurs first. | Overhaul | Change filters when indicated by controller between fluid changes or 24 months, whichever occurs first. |
| **Fluid Change Intervals, TES 389 or Mixture of TES 389 and TES 295 or TES 468 Fluids, Prognostics "ON" *** | | |
| **REQUIRED — TES 389 or Mixture of TES 389 and TES 295 or TES 468 Allison Approved Fluids and Allison High-Capacity Filters — REQUIRED** | | |
| **General or Severe** | | |
| Change fluid when indicated by controller or 24 months, whichever occurs first. Replace filters with fluid. | | |
| * If prognostics is turned "OFF " or Not Calibrated in TCM after serial numbers listed above, refer to Table 11 for utilization of Allison Approved Non-TES 295 or Non-TES 468 fluids change intervals. | | |

Copyright © 2018 Allison Transmission, Inc. All Rights Reserved.

**Table 14. Recommended Filter Change/Fluid Change Intervals — MIL-PRF-2104, MIL-PRF-21260, MIL-PRF-46167**

**NOTE:** Change filters/fluid at or before recommended mileage, months, or hours have elapsed, whichever occurs first.

**NOTE:** Local conditions, severity of operation or duty cycle may require more or less frequent fluid change intervals that differ from the published recommended fluid change intervals of Allison Transmission. Allison Transmission recommends that customers use fluid analysis as the primary method for determining fluid change intervals. In the absence of a fluid analysis program the fluid change intervals listed in the charts should be used.

| Filter Change/Fluid Change Intervals — MIL-PRF-2104, MIL-PRF-21260, MIL-PRF-46167 | |
|---|---|
| PRIOR TO HIGH-CAPACITY FILTERS or W/ HIGH-CAPACITY FILTERS* WITH PROGNOSTICS TURNED "OFF" OR NOT CALIBRATED IN TCM | |
| **General**** | **Severe***** |
| 25,000 miles<br>(40 000 km)<br>1000 hours<br>12 months | 12,000 miles<br>(20 000 km)<br>500 hours<br>6 months |

* High-Capacity Filters released in models starting with S/N 6510670912, S/N 6520067342 (3000 Product Family) and S/N 6610205144, S/N 66200002521 (4000 Product Family)
** General Vocation: Intercity Coach with duty cycle less than or equal to one (1) stop per mile and all other vocations not listed in severe vocation.
*** Severe Vocation: All Retarders, On/Off Highway, Refuse, Transit, Shuttle Transit, and Intercity Coach with duty cycle greater than one (1) stop per mile.

**Table 15. Filter and Gasket Kits**

**NOTE:** Refer to Figure 1 for Filter Locations, and Control Module Dimensions.

| Filter and Gasket Kits | |
|---|---|
| **Kit Description** | **High-Capacity Filter Kit Part Number** |
| Filter Kit, 4" Service Filters for 2" or 7" sump | 29558328 |
| Filter Kit, 6" Service Filters for 4" sump | 29558329 |

**NOTE:** Square cut filter cover O-rings P/N 29501469 are no longer included in High-Capacity Filter Kits P/N 29558328 and P/N 29558329. When servicing former filter covers P/N 29507434, the required square cut filter cover O-rings must be ordered separately. Square cut filter cover O-rings were originally used in transmissions manufactured prior to January 22, 1996, prior to 3000 Series Product Family. S/N 6510069120 or 4000 Series Product Family S/N 6610009730. Former filter covers can be identified by the part number cast on the exterior side of the filter cover. Any 3000 and 4000 Series Product Family transmissions with the former filter cover requires one square cut filter cover O-ring (4) and one O-ring (5) (refer to Figure 1) per filter cover. O-ring (5) is included in the aforementioned high-capacity filter kits. Some remanufactured transmissions may require the use of square cut O-rings if equipped with the former filter covers.

Copyright © 2018 Allison Transmission, Inc. All Rights Reserved.

**Table 16. Fluid Capacity**

| Fluid Capacities (Approximate)* | | | |
|---|---|---|---|
| Transmissions Fluid Loss — Filter Change Only:<br>Main Filter = 1.9 liters (2 quarts)<br>Lube Filter = 7.6 liters (8 quarts) | | | |
| Model | Sump | Initial Fill** | Refill** |
| | | Liters (Quarts) | Liters (Quarts) |
| 3000 | 4 inch | 27 (29) | 18 (19) |
| 3000 | 2 inch | 25 (26) | 16 (17) |
| 4000 | 4 inch*** | 45 (48) | 37 (39) |
| 4000 | 2 inch*** | 38 (40) | 30 (31) |

* Fluid fill capacity is dependent on vehicle configuration. Final fluid capacity must be determined by dipstick level (see Mechanic's Tips MT3004EN Section 1 or your Operator's Manual under "Care and Maintenance".
** Approximate quantities, do not include external lines, cooler, and hose
*** Add 2.8 Liters (3 Quarts) for Transmissions with PTO

**Table 17. Additional Fill for Allison Coolers/Accumulators**

| Additional Fill for Allison Coolers/Accumulators | | |
|---|---|---|
| **Product Family** | **Cooler Type** | **Liters (Quarts)** |
| 3000/4000 | Non-Retarder Direct Mount | 1.0 (1.1) |
| 3000/4000 | Remote/Retarder/Sump | 2.5 (2.6) |
| 3000 | Retarder Accumulator | 1.2 (1.3) |
| 4000 | Direct Mount/Retarder | 2.1 (2.2) |
| 4000 | Retarder Accumulator | 0.6 (0.6) |

Copyright © 2018 Allison Transmission, Inc. All Rights Reserved.

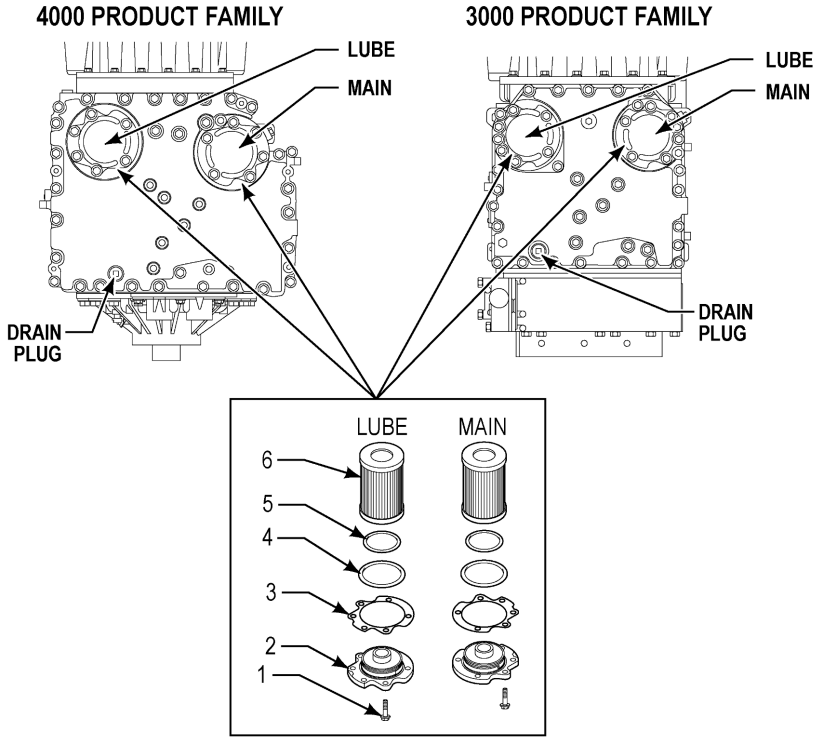


**NOTE:** Torque all filter cover retaining bolts to 51-61 N•m (38-45 lb ft)
**NOTE:** Main and Lube Filter designations cast into bottom of Control Module
**NOTE:** O-Ring #4 is no longer included in high capacity filter kits.

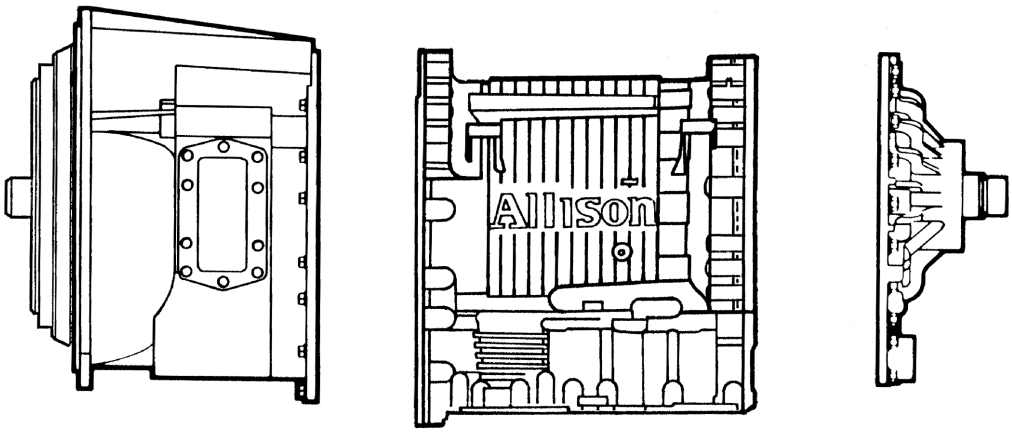


* 4 inch Control Module Measures 3.5 inch approximately
2 inch Control Module Measures 1.75 inch approximately

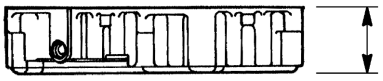

REFERENCED* DIMENSION

3627636

**Figure 1. Drain Plug/Filter Location and Control Module Dimensions**

Copyright © 2018 Allison Transmission, Inc. All Rights Reserved.

# Appendix C. TC10 Filter Change/Fluid Change Intervals

**Table 18. Recommended Filter Change/Fluid Change Intervals — Prognostics is NOT Enabled/Turned OFF**

**NOTE:** Refer to Table 20 for Filter and Gasket Kit information, Table 21 for Fluid Capacity information and Figure 2 for Drain Plug and Filter Locations.

**NOTE:** Change filters/fluid at or before recommended mileage, months, or hours have elapsed, whichever occurs first.

**NOTE:** Local conditions, severity of operation or duty cycle may require more or less frequent fluid change intervals that differ from the published recommended fluid change intervals of Allison Transmission. Allison Transmission recommends that customers use fluid analysis as the primary method for determining fluid change intervals. In the absence of a fluid analysis program the fluid change intervals listed in the charts should be used.

| **Filter Change Intervals, No Prognostics or when Prognostics is NOT Enabled/Turned OFF** | |
|---|---|
| **100 Percent Concentration Allison Approved TES 295 Fluid** | |
| **Internal Filter** | **Lube Filter** |
| **General**<br>Overhaul | **General**<br>500,000 Miles (804,700 km)<br>20,000 Hours<br>60 Months |
| **Fluid Change Intervals, No Prognostics or when Prognostics is NOT Enabled/Turned OFF** | |
| **100 Percent Concentration Allison Approved TES 295 Fluid** | |
| **General**<br>500,000 Miles (804,700 km)<br>20,000 Hours<br>60 Months | |

**Table 19. Recommended Filter Change/Fluid Change Intervals — Prognostics "ON"**

| **Filter Change Intervals, 100 Percent Concentration Allison Approved TES 295 Fluid, Prognostics "ON" *** | |
|---|---|
| **REQUIRED — 100 Percent Concentration Allison Approved TES 295 Fluid and Allison Filters — REQUIRED** | |
| **General** | |
| **Internal Filter** | **Lube Filter** |
| Overhaul | Change filter when indicated by controller between fluid changes or 60 months, whichever occurs first |
| **Fluid Change Intervals, 100 Percent Concentration Allison Approved TES 295 Fluid, Prognostics "ON" *** | |
| **REQUIRED — 100 Percent Concentration Allison Approved TES 295 Fluid and Allison Filters — REQUIRED** | |
| **General** | |
| Change fluid when indicated by controller or 60 months, whichever occurs first. Replace filter with fluid. | |
| * If prognostics is turned "OFF" or Not Calibrated in the TCM, refer to Table 18 for fluid change intervals. | |

Copyright © 2018 Allison Transmission, Inc. All Rights Reserved.

**Table 20. Filter and Gasket Kits**

**NOTE:** Refer to Figure 2 for Filter Location.

| Filter and Gasket Kits | |
|---|---|
| **Description** | **Part Number** |
| Kit - Oil Filter | 29554653 |
| Oil Filter* | 29558295 |
| O-Ring, Cover * | 29554650 |
| Seal, Drain Plug * | 24205123 |
| Instruction Sheet # 350 * | 29554750 |
| Internal Suction Filter** | 29551998 |

*Included in the Oil Filter Kit
**Overhaul Only

**Table 21. Fluid Capacity**

| Capacities (Approximate) * | | |
|---|---|---|
| Model | Initial Fill ** | Refill ** |
| | Liters (Quarts) | Liters (Quarts) |
| TC10 | 49 (52) | 38 (40) |

* Fluid fill capacity is dependent on vehicle configuration. Final fluid capacity must be determined by dipstick level (refer to Mechanic's Tips MT7119EN Section 2 or your Operator's Manual OM7118EN under "Care and Maintenance").
** Approximate quantities, do not include external circuits.

Copyright © 2018 Allison Transmission, Inc. All Rights Reserved.

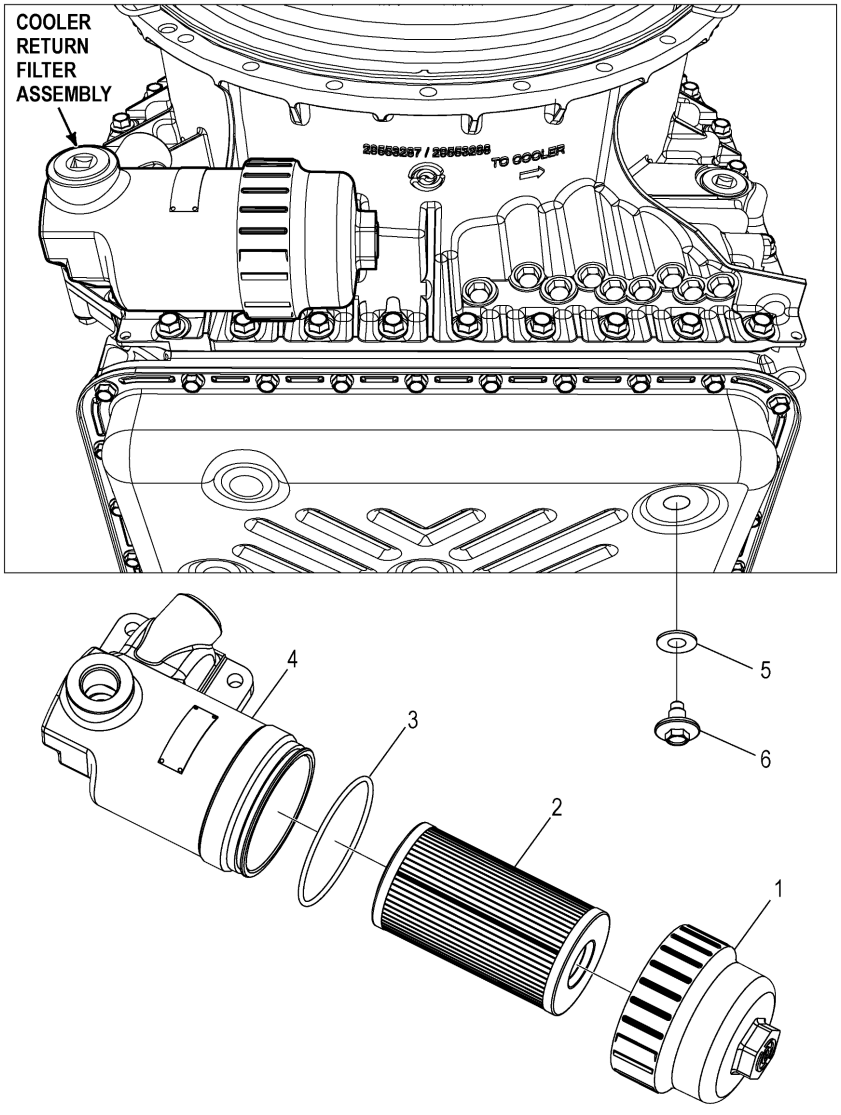


**Figure 2. Drain Plug and Filter Locations**

Copyright © 2018 Allison Transmission, Inc. All Rights Reserved.

# Appendix D. H 40/50 EP Filter Change/Fluid Change Intervals

**Table 22. Recommended Filter Change/Fluid Change Intervals**

**NOTE:** Refer to Figure 3 for Drain Plug and Filter Locations.

**NOTE:** Change filters/fluid at or before recommended mileage or months have elapsed, whichever occurs first.

**NOTE:** H 40/50 EP™ Drive Unit Drive Unit Lube Filter extended time change intervals are only valid with the use of Allison Transmission High-Capacity filters. High-Capacity filters implemented into production starting with S/N 7110001551.

**NOTE:** Local conditions, severity of operation or duty cycle may require more or less frequent fluid change intervals that differ from the published recommended fluid change intervals of Allison Transmission. Allison Transmission recommends that customers use fluid analysis as the primary method for determining fluid change intervals. In the absence of a fluid analysis program the fluid change intervals listed in the charts should be used.

| **Filter Change Intervals** | | | | |
|---|---|---|---|---|
| **REQUIRED — 100 Percent Concentration of TES 468 Fluid — REQUIRED** | | | | |
| **Control Main Filter** | | **Lube Filter** | | **Sump/Internal Filter** |
| Initial | After Initial | Gold Series | High-Capacity | |
| 5,000 Miles<br>(8 000 km)<br>200 Hours | 50,000 Miles<br>(80 000 km)<br>24 Months | 50,000 Miles<br>(80 000 km)<br>24 Months | 100,000 Miles<br>(160 000 km)<br>48 Months | Overhaul |
| **Fluid Change Intervals** | | | | |
| **REQUIRED — 100 Percent Concentration of TES 468 Fluid — REQUIRED** | | | | |
| 100,000 Miles<br>(160 000 km)<br>48 Months | | | | |

**Table 23. Filter and Gasket Kits**

**NOTE:** Refer to Figure 3 for Drain Plug and Filter Locations.

| **Filter and Gasket Kits** | |
|---|---|
| **Description** | **Part Number** |
| Lube Filter and Gasket Kit | 29545785 |
| Control Main Filter | 29539579 |

Copyright © 2018 Allison Transmission, Inc. All Rights Reserved.

**Table 24. Fluid Capacity**

**NOTE:** Refer to Figure 3 for Drain Plug and Filter Locations.

| Capacities (Approximate) * | |
|---|---|
| Transmissions Fluid Loss — Filter Change Only:<br>Control Main filter = 0.94 liters (1 quart)<br>Lube Filter = 2.84 liters (3 quarts) | |
| Model | Refill** |
| | Liters (Quarts) |
| H 40/50 EP™ Drive Unit Drive Unit | 15.1 (16) |
| * Fluid fill capacity is dependent on vehicle configuration.<br>** Approximate quantities, do not include DPIM, cooler, and external lines. | |

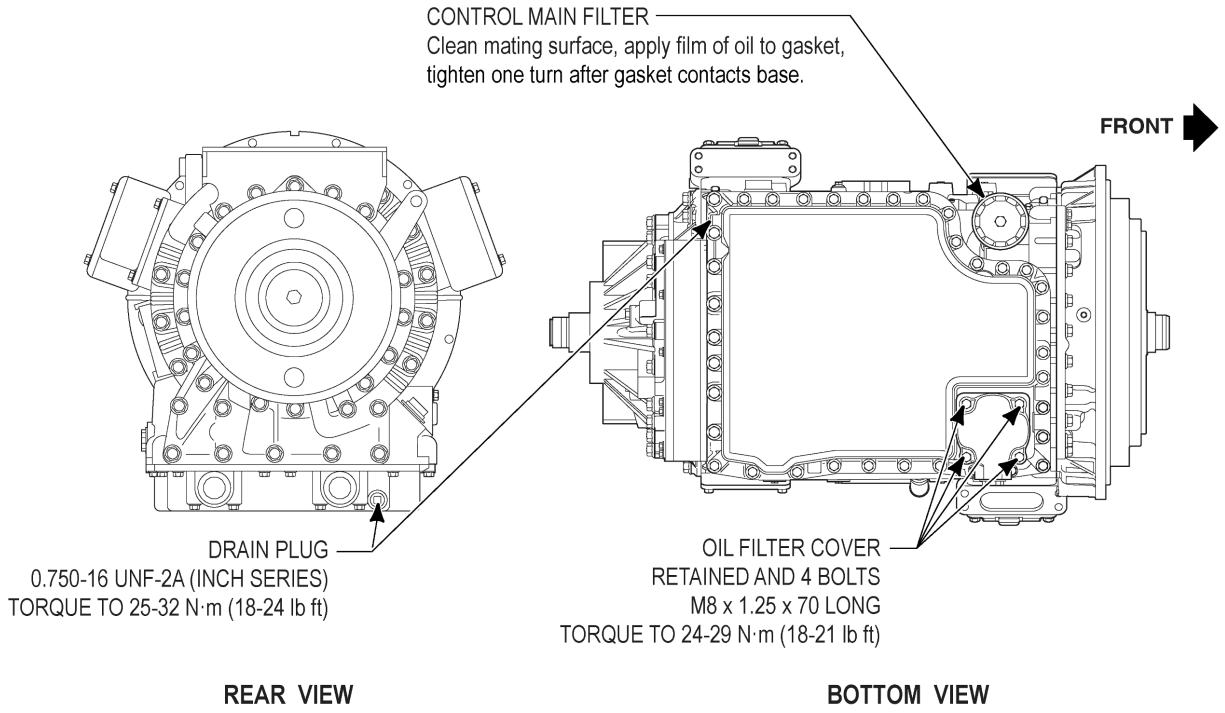


**Figure 3. Drain Plug and Filter Locations**

Copyright © 2018 Allison Transmission, Inc. All Rights Reserved.

# Appendix E. AT 500 Series Filter Change/Fluid Change Intervals

**Table 25. Recommended Filter Change Intervals**

**NOTE:** Refer to Table 26 for Fluid Change Intervals, Table 27 for Filter and Gasket Kit Information and Table 28 for Fluid Capacity Information.

**NOTE:** Change filters at or before recommended mileage, months, or hours have elapsed, whichever occurs first.

<table>
<tr><th colspan="8">Filter Change Intervals</th></tr>
<tr><th colspan="4">100 Percent Concentration Allison Approved TES 295 or TES 468 Fluids*</th><th colspan="4">Allison Approved Non-TES 295 or Non-TES 468 Fluids*</th></tr>
<tr><th colspan="2">Internal Filter</th><th colspan="2">Lube/Auxiliary Filter</th><th colspan="2">Internal Filter</th><th colspan="2">Lube/Auxiliary Filter</th></tr>
<tr><td>General***</td><td>Severe****</td><td colspan="2">Initial<br>5000 Miles (8000 km)<br>200 Hours</td><td>General***</td><td>Severe****</td><td colspan="2">Initial<br>5000 Miles (8000 km)<br>200 Hours</td></tr>
<tr><td colspan="2">Polyester Filter**</td><td>General***†</td><td>Severe****†</td><td colspan="2">Polyester Filter**</td><td>General***†</td><td>Severe****†</td></tr>
<tr><td>Overhaul</td><td>Overhaul</td><td rowspan="3">50,000 Miles<br>(80 000 km)<br>2000 Hours<br>24 Months</td><td rowspan="3">25,000 Miles<br>(40 000 km)<br>1000 Hours<br>12 Months</td><td>Overhaul</td><td>Overhaul</td><td rowspan="3">25,000 Miles<br>(40 000 km)<br>1000 Hours<br>12 Months</td><td rowspan="3">12,000 Miles<br>(20 000 km)<br>500 Hours<br>6 Months</td></tr>
<tr><td colspan="2">Wire Mesh Filter</td><td colspan="2">Wire Mesh Filter</td></tr>
<tr><td>100,000 Miles<br>(160 000 km)<br>4000 Hours<br>48 Months</td><td>50,000 Miles<br>(80 000 km)<br>2000 Hours<br>24 Months</td><td>25,000 Miles<br>(40 000 km)<br>1000 Hours<br>12 Months</td><td>12,000 Miles<br>(20 000 km)<br>500 Hours<br>6 Months</td></tr>
<tr><td colspan="8">See www.allisontransmission.com for a list of Allison Approved TES 389 fluids.</td></tr>
<tr><td colspan="8">* Anything other than 100 percent concentration of Allison Approved TES 295 or TES 468 fluid is considered a mixture and should utilize Allison Approved Non-TES 295 or Non-TES 468 fluids change intervals.<br>*** General Vocation: less than one (1) stop per mile.<br>**** Severe Vocation: more than one (1) stop per mile.<br>** For additional information regarding the polyester internal filter see the latest revision of SIL 9-TR-01.<br>† When an Allison recommended high-efficiency filter is used, the change interval is not until the Change Filter light indicates the filter is contaminated or until it has been in use for 3 years, whichever occurs first. No mileage restrictions apply. High-efficiency filters are only approved for use with AT/MT/HT Series.</td></tr>
</table>

Copyright © 2018 Allison Transmission, Inc. All Rights Reserved.

### Table 26. Recommended Fluid Change Intervals

**NOTE:** Refer to Table 25 for Filter Change Intervals, Table 27 for Filter and Gasket Kit Information and Table 28 for Fluid Capacity Information.

**NOTE:** Change fluid at or before recommended mileage, months, or hours have elapsed, whichever occurs first.

**NOTE:** Local conditions, severity of operation or duty cycle may require more or less frequent fluid change intervals that differ from the published recommended fluid change intervals of Allison Transmission. Allison Transmission recommends that customers use fluid analysis as the primary method for determining fluid change intervals. In the absence of a fluid analysis program the fluid change intervals listed in the charts should be used.

| Fluid Change Intervals | | | |
|---|---|---|---|
| **100 Percent Concentration Allison Approved TES 295 or TES 468 Fluids*** | | **Allison Approved Non-TES 295 or Non-TES 468 Fluids*** | |
| **General**** | **Severe***** | **General**** | **Severe***** |
| 100,000 Miles<br>(160 000 km)<br>4000 Hours<br>48 Months | 50,000 Miles<br>(80 000 km)<br>2000 Hours<br>24 Months | 25,000 Miles<br>(40 000 km)<br>1000 Hours<br>12 Months | 12,000 Miles<br>(20 000 km)<br>500 Hours<br>6 Months |
| See *www.allisontransmission.com* for a list of Allison Approved TES 389 fluids. | | | |

* Anything other than 100 percent concentration of Allison Approved TES 295 or TES 468 fluid is considered a mixture and should utilize Allison Approved Non-TES 295 or Non-TES 468 fluids change intervals.
** General Vocation: less than one (1) stop per mile.
*** Severe Vocation: more than one (1) stop per mile.

### Table 27. Filter and Gasket Kits

**NOTE:** See the latest revision of SIL 9-TR-01 for additional information.

| Filter and Gasket Kits | |
|---|---|
| **Pan** | **Oil Filter and Gasket Kit Part Number** |
| 97 mm (3.8 inch) oil pan | 29540976 |
| 135 mm (5.3 inch) oil pan | 29538489 |

### Table 28. Fluid Capacity

| Capacities (Approximate)* | |
|---|---|
| Pan Depth | Initial Fill** |
| | Liters (Quarts) |
| 97 mm (3.8 inch) oil pan | 8.5 (9) |
| 135 mm (5.3 inch) oil pan | 15 (16) |

* Fluid fill capacity is dependent on vehicle configuration. Final fluid capacity must be determined by dipstick level (see Mechanic's Tips MT1321EN Section 1 or your Operator's Manual under "Care and Maintenance"
** Approximate quantities, do not include external lines and cooler hose

Copyright © 2018 Allison Transmission, Inc. All Rights Reserved.

# Appendix F. MT 600 Series Filter Change/Fluid Change Intervals

**Table 29. Recommended Filter Change Intervals**

**NOTE:** Refer to Table 30 for Fluid Change Intervals, Table 31 for Filter and Gasket Kit Information, and Table 32 for Fluid Capacity Information.

**NOTE:** Change filters at or before recommended mileage, months, or hours have elapsed, whichever occurs first.

**NOTE:** Local conditions, severity of operation or duty cycle may require more or less frequent fluid change intervals that differ from the published recommended fluid change intervals of Allison Transmission. Allison Transmission recommends that customers use fluid analysis as the primary method for determining fluid change intervals. In the absence of a fluid analysis program the fluid change intervals listed in the charts should be used.

| Filter Change Intervals | | | | | | | |
|---|---|---|---|---|---|---|---|
| **100 Percent Concentration Allison Approved TES 295 or TES 468 Fluids *** | | | | **Allison Approved Non-TES 295 or Non-TES 468 Fluids *** | | | |
| **Internal Filter** | | **Lube/Auxiliary Filter** | | **Internal Filter** | | **Lube/Auxiliary Filter** | |
| **General**** | **Severe***** | **Initial** 5000 Miles (8000 km) 200 Hours | | **General**** | **Severe***** | **Initial** 5000 Miles (8000 km) 200 Hours | |
| Overhaul | Overhaul | **General**†** | **Severe***†** | Overhaul | Overhaul | **General**†** | **Severe***†** |
| | | 50,000 Miles (80 000 km) 2000 Hours 24 Months | 25,000 Miles (40 000 km) 1000 Hours 12 Months | | | 25,000 Miles (40 000 km) 1000 Hours 12 Months | 12,000 Miles (20 000 km) 500 Hours 6 Months |
| See *www.allisontransmission.com* for a list of Allison Approved TES 389 fluids. | | | | | | | |

* Anything other than 100 percent concentration Allison Approved TES 295 or TES 468 fluid is considered a mixture and should utilize Allison Approved Non-TES 295 or Non-TES 468 fluids change intervals.
** General Vocation: less than one (1) stop per mile.
*** Severe Vocation: more than one (1) stop per mile.
† When an Allison recommended high-efficiency filter is used, the change interval is not until the Change Filter light indicates the filter is contaminated or until it has been in use for 3 years, whichever occurs first. No mileage restrictions apply. High-efficiency filters are only approved for use with AT/MT/HT Series.

Copyright © 2018 Allison Transmission, Inc. All Rights Reserved.

### Table 30. Recommended Fluid Change Intervals

**NOTE:** Refer to Table 29 for Filter Change Intervals, Table 31 for Filter and Gasket Kit Information, and Table 32 for Fluid Capacity Information.

**NOTE:** Change fluid at or before recommended mileage, months, or hours have elapsed, whichever occurs first.

**NOTE:** Local conditions, severity of operation or duty cycle may require more or less frequent fluid change intervals that differ from the published recommended fluid change intervals of Allison Transmission. Allison Transmission recommends that customers use fluid analysis as the primary method for determining fluid change intervals. In the absence of a fluid analysis program the fluid change intervals listed in the charts should be used.

| Fluid Change Intervals | | | |
|---|---|---|---|
| **100 Percent Concentration Allison Approved TES 295 or TES 468 Fluids *** | | **Allison Approved Non-TES 295 or Non-TES 468 Fluids *** | |
| **General**** | **Severe***** | **General**** | **Severe***** |
| 100,000 Miles<br>(160 000 km)<br>4000 Hours<br>48 Months | 50,000 Miles<br>(80 000 km)<br>2000 Hours<br>24 Months | 25,000 Miles<br>(40 000 km)<br>1000 Hours<br>12 Months | 12,000 Miles<br>(20 000 km)<br>500 Hours<br>6 Months |
| See *www.allisontransmission.com* for a list of Allison Approved TES 389 fluids. | | | |

*Anything other than 100 percent concentration Allison Approved TES 295 or TES 468 fluid is considered a mixture and should utilize Allison Approved Non-TES 295 or Non-TES 468 fluids change intervals.
** General Vocation: less than one (1) stop per mile.
***Severe Vocation: more than one (1) stop per mile.

### Table 31. Filter and Gasket Kit

**NOTE:** See the latest revision of SIL 4-TR-01 for additional information.

| Filter and Gasket Kit |
|---|
| **Oil Filter and Gasket Kit Part Number** |
| 29538489 |

### Table 32. Fluid Capacity

| Capacities (Approximate) * | |
|---|---|
| Pan Depth | Initial Fill** |
| | Liters (Quarts) |
| 110 mm (4.3 inch) oil pan | 11 (12) |
| 130 mm (5.1 inch) oil pan | 14 (15) |

* Fluid fill capacity is dependent on vehicle configuration. Final fluid capacity must be determined by dipstick level (see Mechanic's Tips MT1357EN Section 1 or your Operator's Manual under "Care and Maintenance"
** Approximate quantities, do not include external lines and cooler hose

Copyright © 2018 Allison Transmission, Inc. All Rights Reserved.

# Appendix G. HT 700 Series Filter Change/Fluid Change Intervals

**Table 33. Recommended Filter Change Intervals**

**NOTE:** Refer to Table 34 for Fluid Change Intervals, Table 35 for Filter and Gasket Kit Information, and Table 36 for Fluid Capacity Information.

**NOTE:** Change filters at or before recommended mileage, months, or hours have elapsed, whichever occurs first.

| Filter Change Intervals | | | | |
|---|---|---|---|---|
| **100 Percent Concentration Allison Approved TES 295 or TES 468 Fluids*** | | | | |
| **Main Filter** | | **Internal Filter** | **Lube/Auxiliary Filter** | |
| **General**** | **Severe***** | Overhaul | **Initial**<br>5000 Miles (8000 km)<br>200 Hours | |
| 50,000 Miles<br>(80 000 km)<br>2000 Hours<br>24 Months | 25,000 Miles<br>(40 000 km)<br>1000 Hours<br>12 Months | | **General**†† | **Severe***† |
| | | | 50,000 Miles<br>(80 000 km)<br>2000 Hours<br>24 Months | 25,000 Miles<br>(40 000 km)<br>1000 Hours<br>12 Months |
| **Allison Approved Non-TES 295 or Non-TES 468 Fluids*** | | | | |
| **Main Filter** | | **Internal Filter** | **Lube/Auxiliary Filter** | |
| **General**** | **Severe***** | Overhaul | **Initial**<br>5000 Miles (8000 km)<br>200 Hours | |
| 25,000 Miles<br>(40 000 km)<br>1000 Hours<br>12 Months | 12,000 Miles<br>(20 000 km)<br>500 Hours<br>6 Months | | **General**†† | **Severe***† |
| | | | 25,000 Miles<br>(40 000 km)<br>1000 Hours<br>12 Months | 12,000 Miles<br>(20 000 km)<br>500 Hours<br>6 Months |
| See *www.allisontransmission.com* for a list of Allison Approved TES 389 fluids | | | | |

* Anything other than 100 percent concentration of Allison Approved TES 295 or TES 468 fluid is considered a mixture and should utilize Allison Approved Non-TES 295 or Non-TES 468 fluids change intervals.
** General Vocation: less than one (1) stop per mile.
*** Severe Vocation: more than one (1) stop per mile.
† When an Allison recommended high-efficiency filter is used, the change interval is not until the Change Filter light indicates the filter is contaminated or until it has been in use for 3 years, whichever occurs first. No mileage restrictions apply. High-efficiency filters are only approved for use with AT/MT/HT Series.

Copyright © 2018 Allison Transmission, Inc. All Rights Reserved.

### Table 34. Recommended Fluid Change Intervals

**NOTE:** Refer to Table 33 for Filter Change Intervals, Table 35 for Filter and Gasket Kit Information, and Table 36 for Fluid Capacity Information.

**NOTE:** Change fluid at or before recommended mileage, months, or hours have elapsed, whichever occurs first.

**NOTE:** Local conditions, severity of operation or duty cycle may require more or less frequent fluid change intervals that differ from the published recommended fluid change intervals of Allison Transmission. Allison Transmission recommends that customers use fluid analysis as the primary method for determining fluid change intervals. In the absence of a fluid analysis program the fluid change intervals listed in the charts should be used.

| Fluid Change Intervals | | | |
|---|---|---|---|
| **100 Percent Concentration Allison Approved TES 295 or TES 468 Fluids *** | | **Allison Approved Non-TES 295 or Non-TES 468 Fluids*** | |
| **General**** | **Severe***** | **General**** | **Severe***** |
| 100,000 Miles<br>(160 000 km)<br>4000 Hours<br>48 Months | 50,000 Miles<br>(80 000 km)<br>2000 Hours<br>24 Months | 25,000 Miles<br>(40 000 km)<br>1000 Hours<br>12 Months | 12,000 Miles<br>(20 000 km)<br>500 Hours<br>6 Months |
| See *www.allisontransmission.com* for a list of Allison Approved TES 389 fluids | | | |
| *Anything other than 100 percent concentration of Allison Approved TES 295 or TES 468 fluid is considered a mixture and should utilize Allison Approved Non-TES 295 or Non-TES 468 fluids change intervals.<br>**General Vocation: less than one (1) stop per mile.<br>***Severe Vocation: more than one (1) stop per mile. | | | |

### Table 35. Filter and Gasket Kit

| Filter and Gasket Kits | |
|---|---|
| **Pan** | **Filter and Gasket Kit Part Number** |
| 114 mm (4.5 inch) Oil Pan | 29530562 |
| 114 mm (4.5 inch) Oil Pan (With adapter 23016883 and pan 23016884) | 29530563 |
| 152 mm (6 inch) Oil Pan | 6839945 |
| 178 mm (7 inch) Oil Pan | 29530564 |
| 216 mm (8.5 inch) Hydraulic Oil Pan | 23012407 |
| 216 mm (8.5 inch) Electronic Oil Pan | 29530565 |

Copyright © 2018 Allison Transmission, Inc. All Rights Reserved.

**Table 36. Fluid Capacities**

| Capacities (Approximate)* | |
|---|---|
| Pan Depth | Refill** |
| | Liters (Quarts) |
| 114 mm (4.5 inch) oil pan | 32 (34) |
| 152 mm (6 inch) oil pan | 28.5 (30) |
| 178 mm (7 inch) oil pan | 31 (33) |
| 216 mm (8.5 inch) oil pan | 40.5 (42.8) |

* Fluid fill capacity is dependent on vehicle configuration. Final fluid capacity must be determined by dipstick level (see Mechanic's Tips MT1366EN (Hydraulic Controls) or MT1958EN (Electronics Controls) Section 1 or your Operator's Manual under "Care and Maintenance"
** Approximate quantities, do not include external lines, and cooler hose

Copyright © 2018 Allison Transmission, Inc. All Rights Reserved.