NOVA BUS

INFORMATION LETTER LI4171ER2

REFERENCE:	Nova Bus Manuals
SECTION:	12: Interior Furnishing
RS Nº:	MQR 7621-1007
EFFECTIVE IN PROD.:	N/A

APPLICATION DEADLINE: N/A

SUBJECT:	Articulation stanchion
JUSTIFICATION:	New improved stanchion is now available for installation in the articulation section of the vehicle.

LEVEL	DESCRIPTION	DIRECT CHARGES		TIME
		LABOUR	MATERIAL	
1	Installation of new stanchion	Client	Client	–
2	–	–	–	–

MATERIAL

QTY	PART Nº	REV.	DESCRIPTION	REPLACES PART N°
LEVEL 1				
1*	N90327-24	–	STANCHION ARTIC ASSY BLACK	N48035-02
4*	N11169	–	BOLT M8X20 YP GR8.8 DIN933	–
4*	N21101	–	WASHER M8 OVERSIZE YP DIN9021	–
2*	N40770	–	BLOCK TENON M8	–
LEVEL 2				
–	–	–	–	–

*** The material of this LI is to replace a single stanchion. If you are replacing the stanchions on both sides, please order this LI twice per vehicle**.

To order, please contact Prevost Parts by phone at 1-800-771-6682, by fax at 1-888-668-2555 or by email at prevostparts.commandes@volvo.com. Specify document number, quantity of parts required and shipping address.

DISPOSAL OF PARTS

REMOVED PARTS ARE:	DISCARDED *	RETAINED	* Dispose of the unused parts and the defective parts in accordance with local environmental standards in effect.
	Yes	–	

REVISION HISTORY

REV.	DATE	CHANGE DESCRIPTION	WRITTEN BY
NR	2018JA30	Initial release	Kumaraswamy K S
R1	2018MR29	Page 1: Quantity of material adjusted to replace one side at a time. Note added for the customer to specify if he wants to order 1 or 2 stanchions.	André Pelletier
R2	2018AL04	Stanchion color is BLACK in material list	André Pelletier

APPROVED BY: Daniel Theriault

Digitally signed by Daniel Theriault
DN: cn=Daniel Theriault, o=Nova Bus, ou, email=daniel.theriault@volvo.com, c=CA
Date: 2018.04.30 12:07:24 -04'00'

CLIENT	ORDER	ROAD NUMBER		VIN (2NVY/4RKY...)		QTY
		FROM	TO	FROM	TO	
Clemson Area Transit - South Carolina	L617	-	-	S92U5C4500002	S92U5C4500002	1

WARNING

Follow your internal safety procedures.

PROCEDURE

1.1. Park the vehicle on an even surface with transmission in neutral (N).

1.2. Set the Master control switch in the STOP position (see Figure 1).

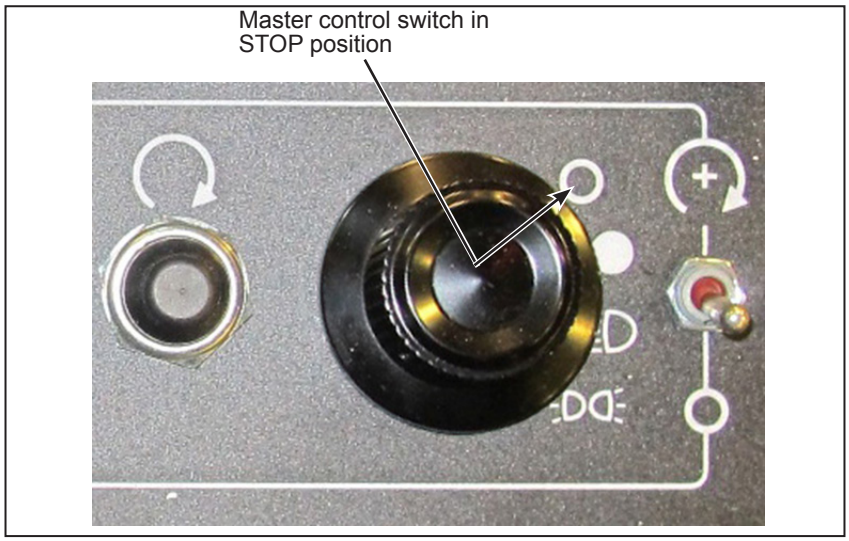

Figure 1 - Master Control Switch in STOP Position

1.3. Locate the articulation area inside the vehicle (see Figure 2).

Figure 2 - Typical View of Articulation System Inside the Vehicle

1.4. Remove the existing stanchion fixed to the center hoop of the articulation. Discard the stanchion, bolts and washers (see Figure 3).

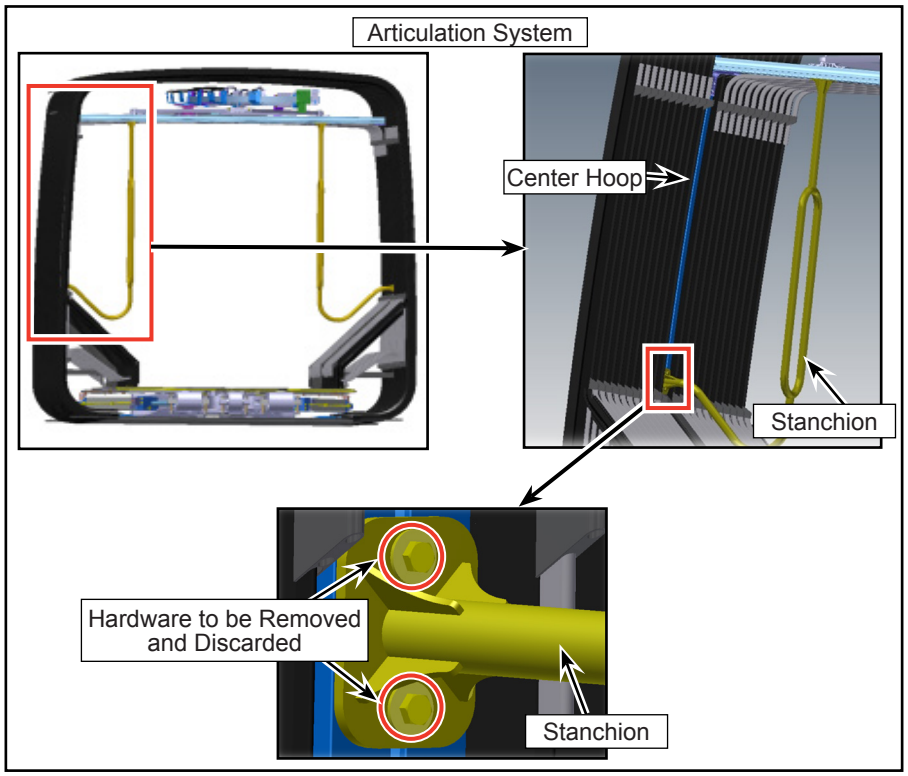

Figure 3 - Removal of Stanchion

1.5. Retain the tenon blocks at the same location (inside the center hoop aluminium profile) as shown (see Figure 4).

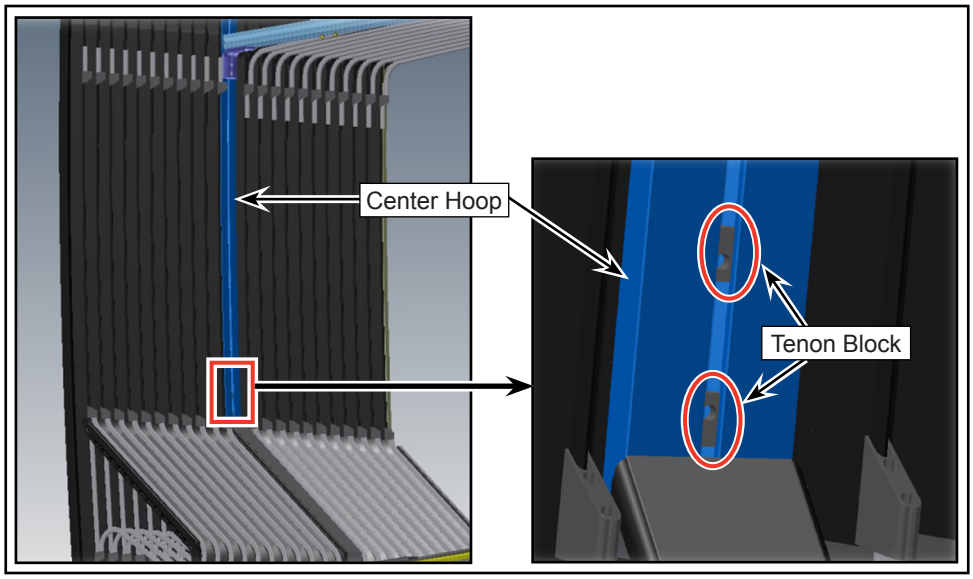

Figure 4 - Typical View of Tenon Block

1.6. Install the new tenon block into the center hoop profile (right below the horizontal guiding profile) on both sides with a flat screw driver as shown (see Figure 5).

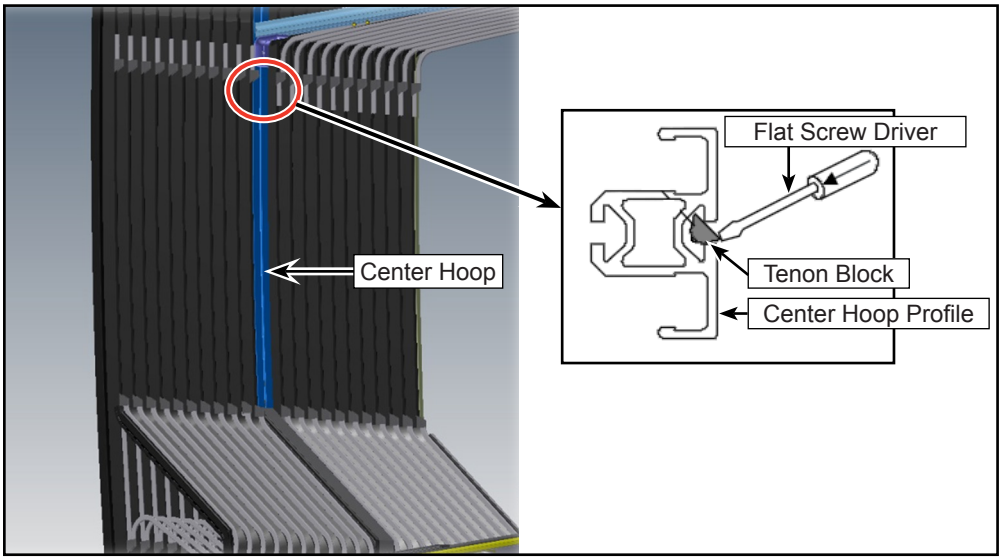

Figure 5 - Installation of Tenon Block

1.7. Install the new stanchion on to the tenon block present inside the center hoop profile with the hardware provided (see Figure 6).

1.8. Ensure that enough gap (Min. 25 mm) is left between the lower edge of the stanchion and the floor cover profile as shown (see Figure 6).

1.9. Apply blue thread locker and torque the bolts as specified (see Figure 6).

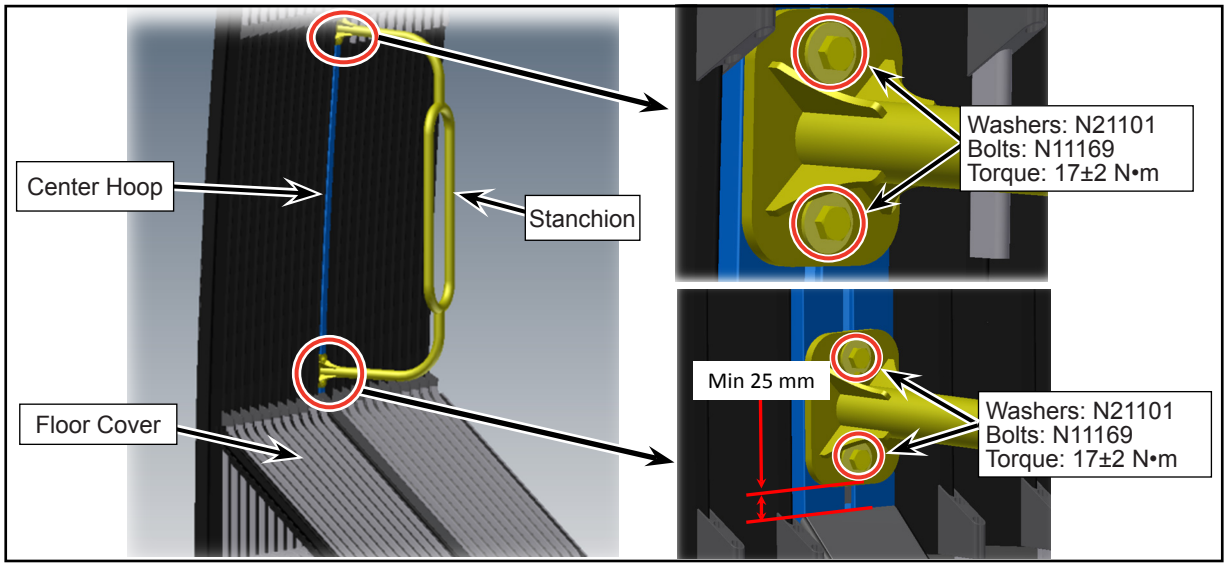

Figure 6 - Installation of New Stanchion

1.10. Ensure that the stanchion is vertical (perpendicular to the floor) (see Figure 7).

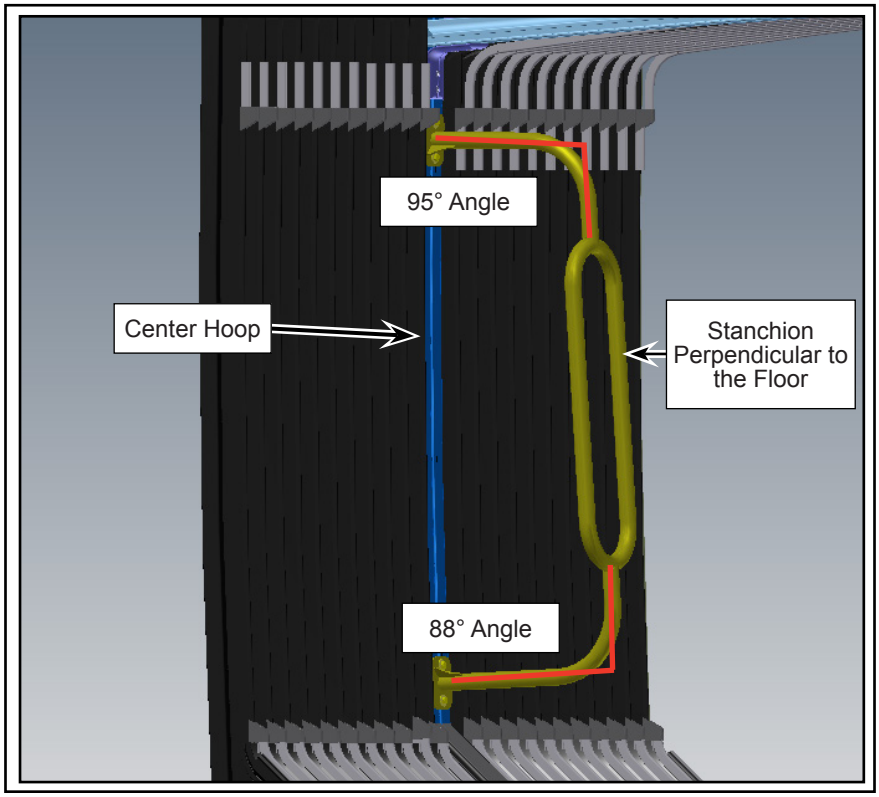

Figure 7 - Typical View of Stanchion Orientation

1.11. Apply torque seal on the bolts.

1.12. Set the Master control switch in the ON position.

1.13. The vehicle may be returned to service.