Service Data

SD-08-2412

Bendix® AD-9® & AD-9® PG (with PuraGuard® Coalescing Filter) Air Dryers

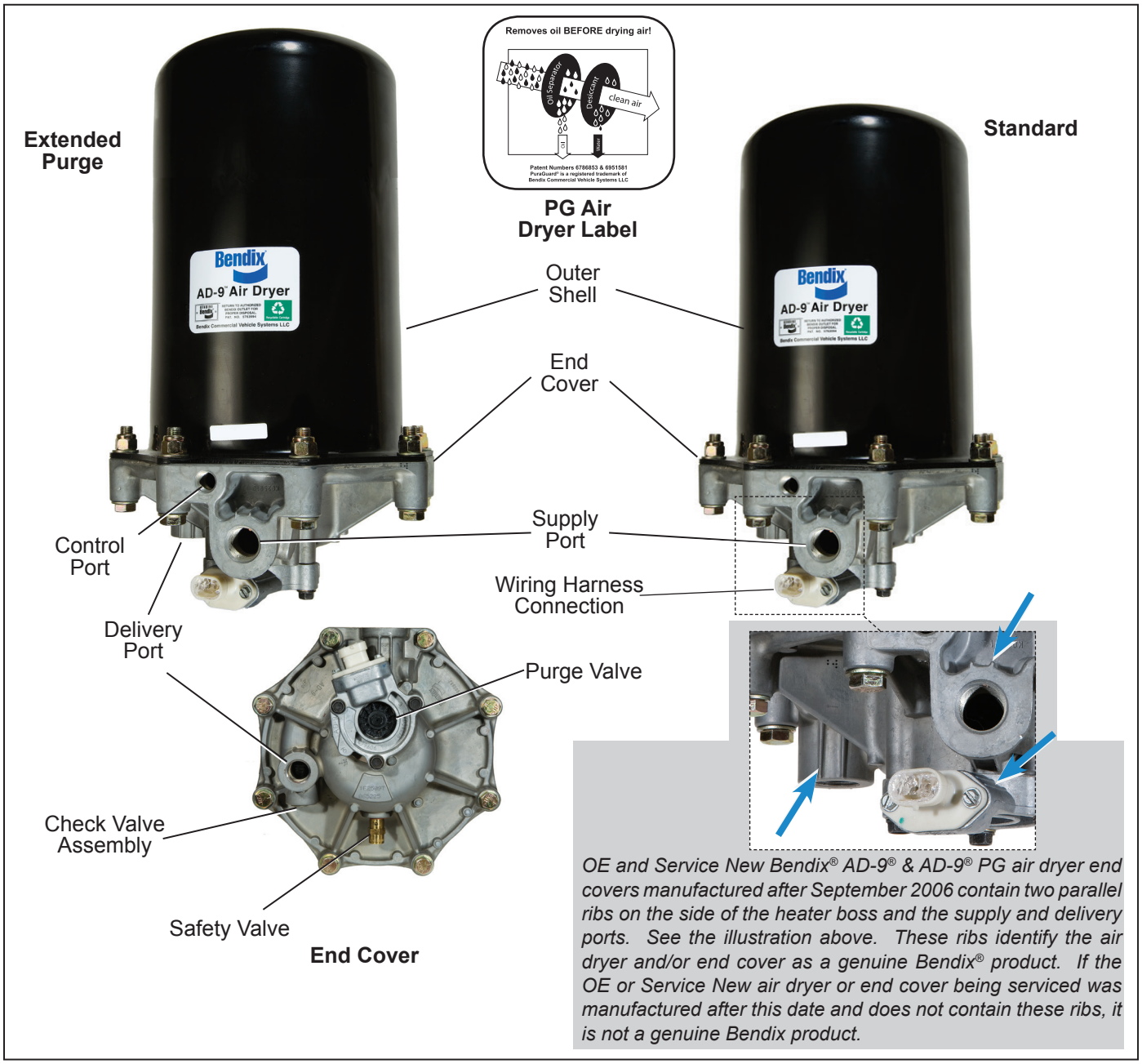

Figure 1 – Bendix® AD-9® & AD-9® PG (with PuraGuard® Oil Coalescing Filter) Air Dryers

DESCRIPTION

The function of the Bendix® AD-9® and AD-9® PG (with PuraGuard® coalescing filter) air dryers is to collect and remove air system contaminants in solid, liquid, and vapor form before they enter the brake system. They provide clean, dry air to the components of the brake system which increases the life of the system and reduces maintenance costs. Daily manual draining of the reservoirs is eliminated.

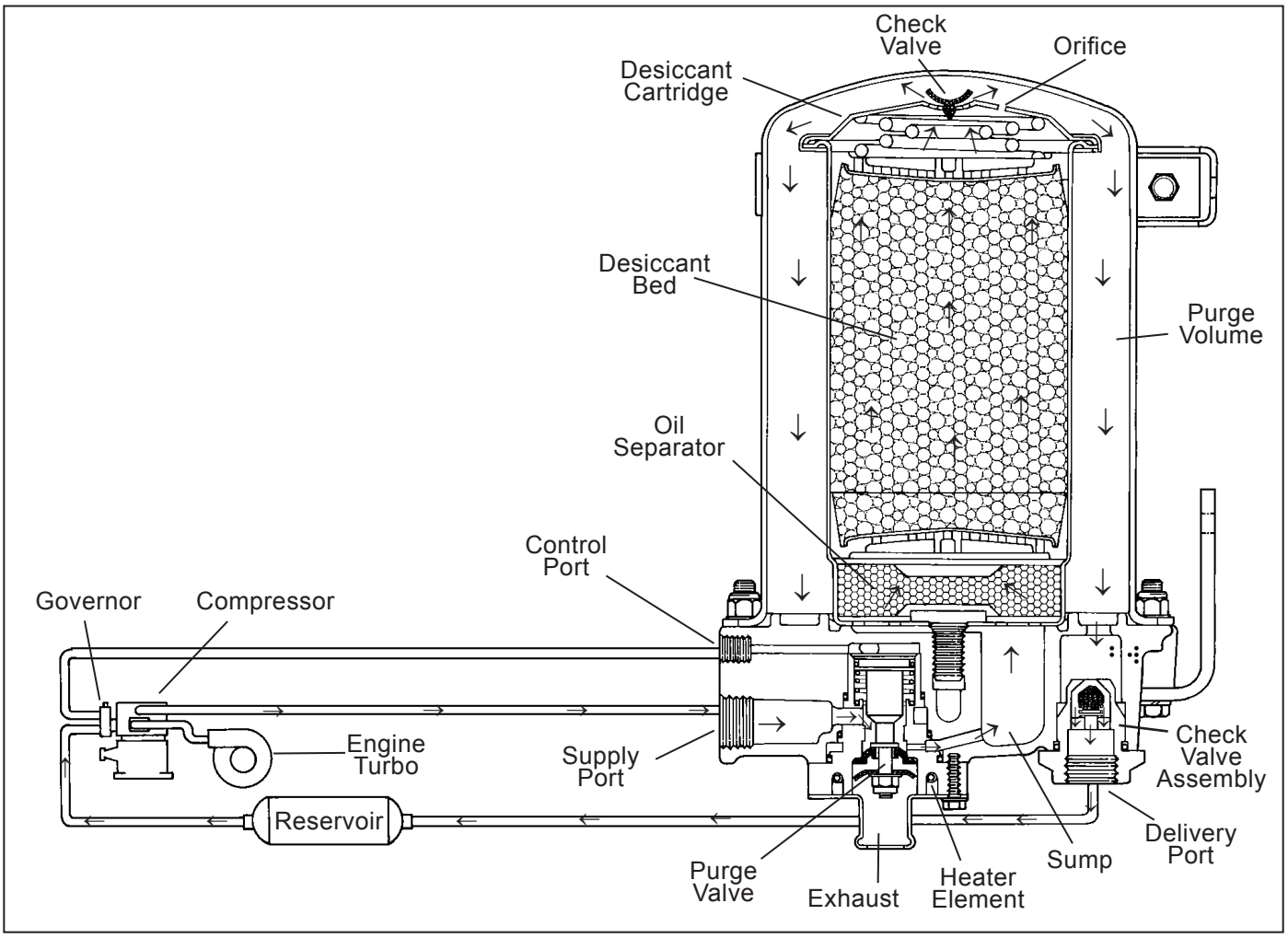

Figure 2 – Charge Cycle

The Bendix® AD-9® and AD-9® PG (with PuraGuard® coalescing filter) air dryers each consist of a desiccant cartridge and a die cast aluminum end cover secured to a cylindrical steel outer shell with eight cap screws and nuts. The end cover contains a check valve assembly, a safety valve, three threaded air connections, and the purge valve housing assembly. The removable purge valve housing assembly incorporates a purge valve mechanism and a turbocharger cut-off feature that is designed to prevent loss of engine "turbo" boost pressure during the purge cycle of the Bendix AD-9 and AD-9 PG air dryers. For ease of serviceability, the desiccant cartridge and discharge check valve assembly are screw-in types. The purge valve housing assembly – which includes the heater and thermostat assembly – and the discharge check valve assembly, are serviceable from the exterior of the air dryer; servicing the screw-in desiccant cartridge requires removal of the air dryer assembly from the vehicle.

The AD-9 PG air dryer appears identical to the standard AD-9 air dryer, but contains a coalescing media at the inlet of the desiccant bed. This coalescing media provides a higher level of oil removal over the standard AD-9 air dryer. The AD-9 PG air dryer has all the same functions of the standard AD-9 air dryer, and is used where oil is contaminating downstream components. The Bendix AD-9 PG air dryer can be identified by the PG label (shown in Figure 1) located on the air dryer housing.

The Bendix AD-9 and AD-9 PG air dryers have three female pipe thread air connections and each is identified as follows:

Port I.D.	Function/Connection
CON 4	Control Port (purge valve control and turbo cut-off)
SUP 11	Supply Port (air in)
DEL 2	Delivery Port (air out)

OPERATION OF THE BENDIX AD-9 AIR DRYER

The AD-9 and AD-9 PG air dryers alternate between two operational modes, or "cycles", during operation: the *charge cycle* and the *purge cycle*. The following description of operation is separated into these "cycles" of operation.

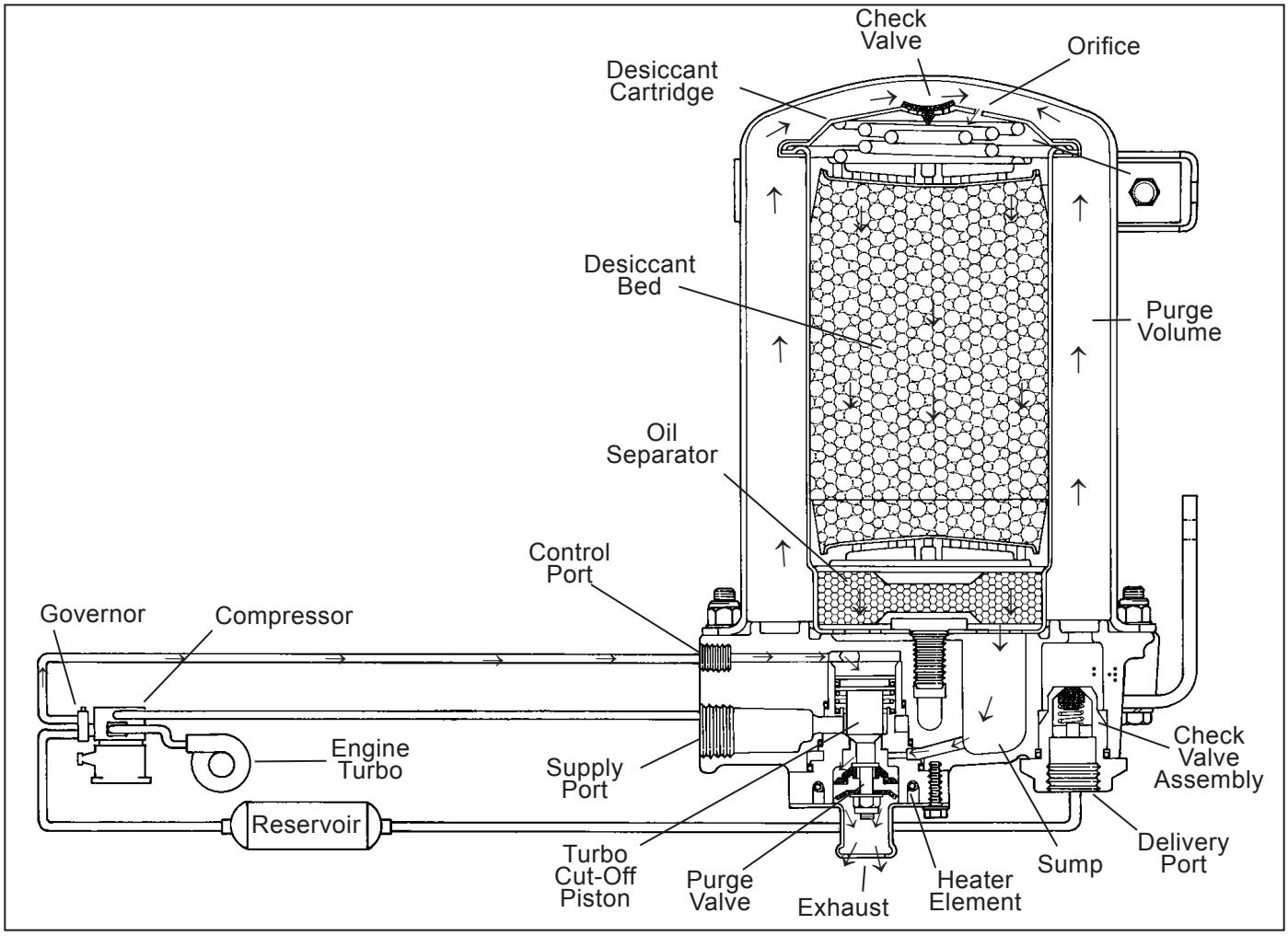

Figure 3 – Purge Cycle

CHARGE CYCLE (Refer to Figure 2)

When the compressor is loaded (compressing air) compressed air – along with oil, oil vapor, water, and water vapor – flows through the compressor discharge line to the supply port of the air dryer end cover. As air travels through the end cover assembly, its direction of flow changes several times, reducing the temperature, causing contaminants to condense and drop to the bottom, or sump, of the air dryer end cover.

After exiting the end cover, the air flows into the desiccant cartridge. Once in the desiccant cartridge, air first flows through an oil separator which removes water in liquid form, as well as oil and solid contaminants.

Air exits the oil separator and enters the desiccant drying bed. Air flowing through the column of desiccant becomes progressively drier as water vapor adheres to the desiccant material in a process known as adsorption. The desiccant cartridge using the adsorption process typically removes 95% of the water vapor from the pressurized air.

The majority of dry air exits the desiccant cartridge – through its integral single check valve – to fill the purge volume between the desiccant cartridge and outer shell. Some air will also exit the desiccant cartridge through the purge orifice adjacent to the check valve.

Dry air flows out of the purge volume through the single check valve assembly and out the delivery port to the first (supply) reservoir of the air system.

The air dryer will remain in the charge cycle until air brake system pressure builds to the governor cut-out setting.

PURGE CYCLE (Refer to Figure 3)

When air brake system pressure reaches the cut-out setting of the governor, the compressor unloads (air compression stopped), and the purge cycle of the air dryer begins. When the governor unloads the compressor, it pressurizes the compressor unloader mechanism and line connecting the governor unloader port to the air dryer end cover control port. The purge piston moves in response to air pressure, causing the purge valve to open to atmosphere and (partially) closing off the supply of air from the compressor. (This will be discussed further in the section covering the turbo cut-off feature.) Contaminants in the end cover sump are expelled immediately when the purge valve

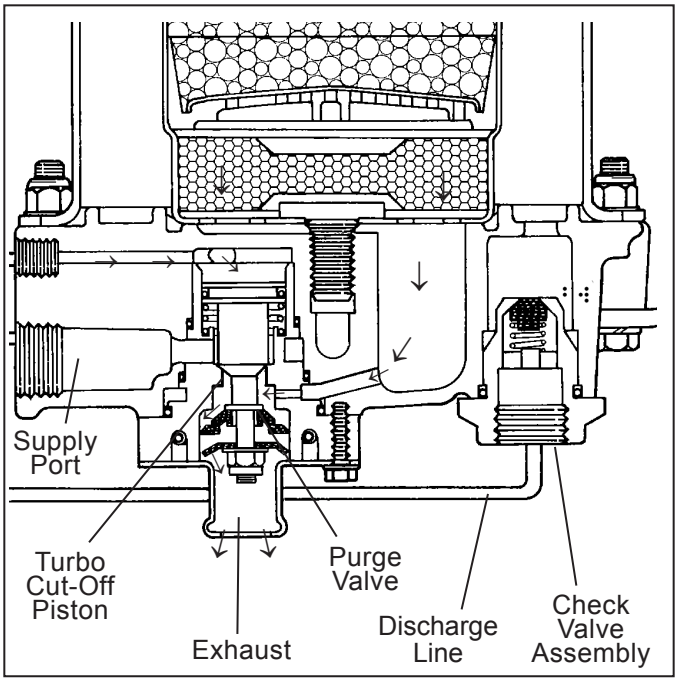

Figure 4 – Turbo Cut-Off Feature

opens. Also, air – which was flowing through the desiccant cartridge – changes direction and begins to flow toward the open purge valve. Oil and solid contaminants collected by the oil separator are removed by air flowing from the desiccant drying bed to the open purge valve.

The initial purge and desiccant cartridge decompression lasts only a few seconds and is evidenced by an audible burst of air at the Bendix® AD-9® and AD-9® PG (with PuraGuard® coalescing filter) air dryer's exhaust.

The actual reactivation of the desiccant drying bed begins as dry air flows from the purge volume through the desiccant cartridge purge orifice and into the desiccant drying bed. Pressurized air from the purge volume expands after passing through the purge orifice; its pressure is lowered and its volume increased. The flow of dry air through the drying bed reactivates the desiccant material by removing the water vapor adhering to it. Generally 15-30 seconds are required for the entire purge volume of a standard Bendix AD-9 or AD-9 PG air dryer to flow through the desiccant drying bed.

The end cover single check valve assembly prevents air pressure in the brake system from returning to the air dryer during the purge cycle. After the 30-second purge cycle is complete, the air dryer is ready for the next charge cycle to begin.

The purge valve will remain open after the purge cycle is complete, and will not close until air brake system pressure is reduced and the governor signals the compressor to charge.

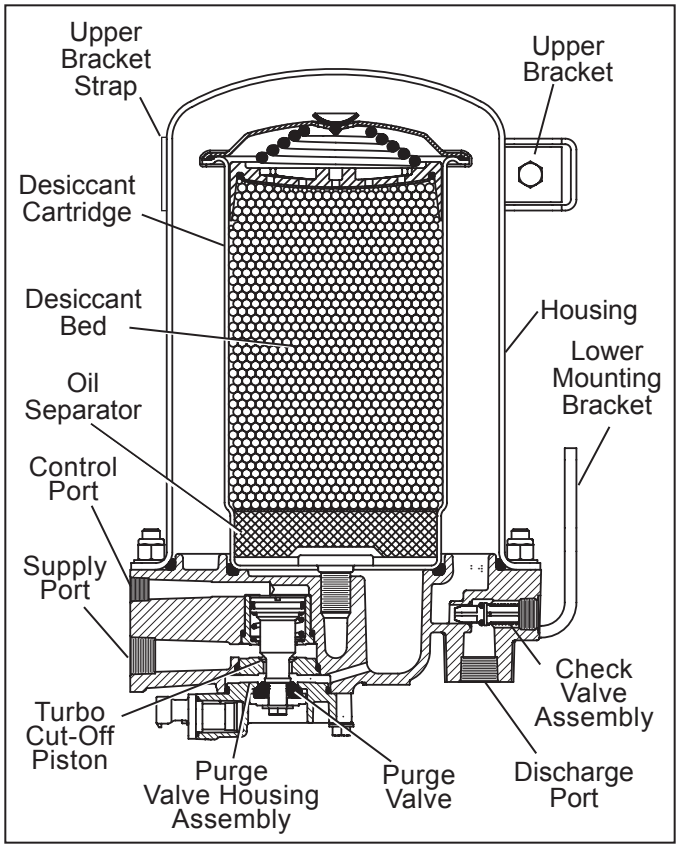

Figure 5 – Cross Section

TURBO CUT-OFF FEATURE (Refer to Figure 4)

The primary function of the turbo cut-off valve is to prevent loss of engine turbocharger air pressure through the Bendix AD-9 and AD-9 PG air dryers in systems where the compressor intake is connected to the engine turbocharger. The turbo cut-off valve also reduces the “puffing” of air out the open exhaust when a naturally-aspirated, single cylinder compressor equipped with an inlet check valve is in use.

At the onset of the purge cycle, the downward travel of the purge piston is stopped when the turbo cut-off valve (tapered portion of the purge piston) contacts its mating metal seat in the purge valve housing. With the turbo cut-off valve seated (closed position), air in the discharge line and air dryer inlet port is restricted from entering the air dryer. While the turbo cut-off effectively prevents loss of turbocharger boost pressure to the engine, some “seepage” of air may be detected under certain conditions of compressor engine and turbocharger operation. Even so, there will always be low pressure trapped in the discharge line.

PREVENTIVE MAINTENANCE

Important: Review the warranty policy before performing any intrusive maintenance procedures. An extended warranty may be voided if intrusive maintenance is performed during this period. Note: It is acceptable for

the purge valve to be maintained as necessary, (i.e., the installation of a purge valve maintenance kit), without voiding the warranty.

Because no two vehicles operate under identical conditions, maintenance and maintenance intervals will vary. Experience is a valuable guide in determining the best maintenance interval for any one particular operation.

Every 900 operating hours or 25,000 miles or every three (3) months:

1. Check for moisture in the air brake system by opening reservoirs, drain cocks, or valves, and checking for the presence of water. If moisture is present, the desiccant may require replacement; however, the following conditions can also cause water accumulation and should be considered before replacing the desiccant:
   A. An outside air source has been used to charge the system. This air did not pass through the drying bed.
   B. Air usage is exceptionally high and not normal for a highway vehicle. This may be due to accessory air demands or some unusual air requirement that does not allow the compressor to load and unload (compressing and non-compressing cycle) in a normal fashion. Check for high air system leakage. If the vehicle vocation has changed it may be necessary to upgrade the compressor size. *Refer to Appendix A, Table A and the column titled Vehicle Vocation.*
   C. The air dryer has been installed in a system that has been previously used without an air dryer. This type of system will be saturated with moisture and several weeks of operation may be required to dry it out.
   D. Location of the air dryer is too close to the air compressor. *Refer to the Locating Bendix® AD-9® Air Dryer On Vehicle section and Appendix A, Table A, column 2 for discharge line length*; or
   E. In areas where more than a 30°F range of temperature occurs in one day, small amounts of water can accumulate in the air brake system due to condensation. Under these conditions, the presence of small amounts of moisture is normal and should not be considered as an indication that the dryer is not performing properly.

   Note: A small amount of oil in the system may be normal and should not, in itself, be considered a reason to replace the desiccant; oil stained desiccant can function adequately.
2. Check mounting bolts for tightness. Re-torque to 270-385 in-lbs.
3. Perform the *Operation & Leakage Tests* listed in this publication.

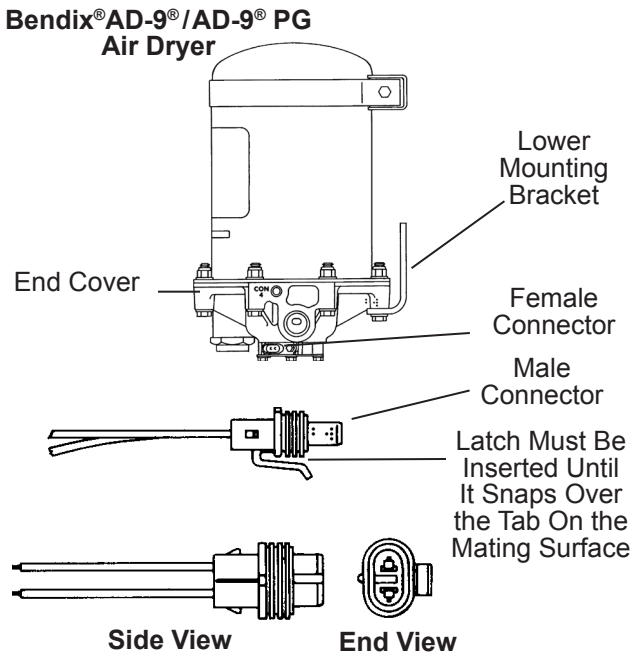

A two lead, 12-inch, wire harness with attached weather resistant connector is available as an aftermarket kit. Connect one of the two leads of the wire harness to the engine kill or ignition switch. The remaining lead of the wire harness must be connected to a good vehicle ground. A fuse should be installed in the power carrying wire; install a 10-amp fuse for 12-volt heaters and a 5-amp fuse for a 24-volt heater. Use 14 AWG wire if it is necessary to lengthen the wire harness provided. Make certain all wire splices are waterproofed. Tie wrap or support all electrical wire leading to the AD-9 or AD-9 PG air dryer.

Figure 6 – Heater And Thermostat Connector

Oil removal requirements for air brake quality vary by vehicle manufacturer. Because vehicle vocation and maintenance can influence when the AD-9® PG air dryer cartridge requires replacement, each fleet should modify their replacement schedule based on experience. The change out interval will be extended if the compressor passes a low level of particles, and the interval will be reduced if excessive carbon particles are delivered to the dryer inlet. Higher compressor build up times at idle and water or oil in downstream reservoirs indicate an AD-9 PG air dryer desiccant cartridge may need to be replaced.

Every 10,800 hours; 300,000 miles or 36 months:

1. Rebuild the air dryer.

Note: The desiccant change interval may vary from vehicle to vehicle. *Refer to Air Dryer Application Guideline (BW2600)* for cartridge change recommendations. In order to take maximum advantage of desiccant life and ensure that replacement occurs only when necessary, it is important that *Operation & Leakage Tests* be performed.

GENERAL SAFETY GUIDELINES

WARNING! PLEASE READ AND FOLLOW THESE INSTRUCTIONS TO AVOID PERSONAL INJURY OR DEATH:

When working on or around a vehicle, the following guidelines should be observed AT ALL TIMES:

- ▲ **Park the vehicle on a level surface, apply the parking brakes and always block the wheels. Always wear personal protection equipment.**
- ▲ **Stop the engine and remove the ignition key when working under or around the vehicle. When working in the engine compartment, the engine should be shut off and the ignition key should be removed. Where circumstances require that the engine be in operation, EXTREME CAUTION should be used to prevent personal injury resulting from contact with moving, rotating, leaking, heated or electrically-charged components.**
- ▲ **Do not attempt to install, remove, disassemble or assemble a component until you have read, and thoroughly understand, the recommended procedures. Use only the proper tools and observe all precautions pertaining to use of those tools.**
- ▲ **If the work is being performed on the vehicle's air brake system, or any auxiliary pressurized air systems, make certain to drain the air pressure from all reservoirs before beginning ANY work on the vehicle. If the vehicle is equipped with a Bendix® AD-IS® air dryer system, a Bendix® DRM™ dryer reservoir module, or a Bendix® AD-9si® air dryer, be sure to drain the purge reservoir.**
- ▲ **Following the vehicle manufacturer's recommended procedures, deactivate the electrical system in a manner that safely removes all electrical power from the vehicle.**
- ▲ **Never exceed manufacturer's recommended pressures.**
- ▲ **Never connect or disconnect a hose or line containing pressure; it may whip and/or cause hazardous airborne dust and dirt particles. Wear eye protection. Slowly open connections with care, and verify that no pressure is present. Never remove a component or plug unless you are certain all system pressure has been depleted.**
- ▲ **Use only genuine Bendix® brand replacement parts, components and kits. Replacement hardware, tubing, hose, fittings, wiring, etc. must be of equivalent size, type and strength as original equipment and be designed specifically for such applications and systems.**
- ▲ **Components with stripped threads or damaged parts should be replaced rather than repaired. Do not attempt repairs requiring machining or welding unless specifically stated and approved by the vehicle and component manufacturer.**
- ▲ **Prior to returning the vehicle to service, make certain all components and systems are restored to their proper operating condition.**
- ▲ **For vehicles with Automatic Traction Control (ATC), the ATC function must be disabled (ATC indicator lamp should be ON) prior to performing any vehicle maintenance where one or more wheels on a drive axle are lifted off the ground and moving.**
- ▲ **The power MUST be temporarily disconnected from the radar sensor whenever any tests USING A DYNAMOMETER are conducted on a vehicle equipped with a Bendix® Wingman® system.**
- ▲ **You should consult the vehicle manufacturer's operating and service manuals, and any related literature, in conjunction with the Guidelines above.**

WARNING!

This air dryer is intended to remove moisture and other contaminants normally found in the air brake system. Do not inject alcohol, anti-freeze, or other de-icing substances into or upstream of the air dryer. Alcohol is removed by the dryer, but reduces the effectiveness of the device to dry air. Use of other substances can damage the air dryer and may void the warranty.

OPERATION & LEAKAGE TESTS

1. Test the outlet port check valve assembly by building the air system to governor cut-out and observing a test air gauge installed in the #1 reservoir. A rapid loss of pressure could indicate a failed outlet port check valve. This can be confirmed by bleeding the system down and removing the check valve assembly from the end cover. Once this has been done, subject air pressure to the unit and apply a soap solution to the check valve side. Leakage should not exceed a 1" bubble in 1 second.
2. Check for excessive leakage around the purge valve. With the compressor in loaded mode (compressing air), apply a soap solution to the purge valve housing assembly exhaust port and observe that leakage does not exceed a 1" bubble in 1 second. If the leakage exceeds the maximum specified, service the purge valve housing assembly.
3. Close all reservoir drain cocks. Build up system pressure to governor cut-out and note that the air dryer purges with an audible escape of air. "Fan" the service brakes to reduce system air pressure to governor cut-in. Note that the system once again builds to full pressure and is followed by an air dryer purge.

4. Check the operation of the safety valve by pulling the exposed stem while the compressor is loaded (compressing air). There must be an exhaust of air while the stem is held and the valve should re-seat when the stem is released.
5. Check all lines and fittings leading to and from the air dryer for leakage and integrity.
6. Check the operation of the end cover heater and thermostat assembly during cold weather operation as follows:

   A. Electric Power to the Dryer

   With the ignition or engine kill switch in the ON position, check for voltage to the heater and thermostat assembly using a voltmeter or test light. Unplug the electrical connector at the air dryer and place the test leads on each of the pins of the male connector. If there is no voltage, look for a blown fuse, broken wires, or corrosion in the vehicle wiring harness. Check to see if a good ground path exists.

   B. Thermostat and Heater Operation

   Turn off the ignition switch and cool the end cover assembly to below 40°F. Using an ohmmeter, check the resistance between the electrical pins in the female connector. The resistance should be 1.5 to 3.0 ohms for the 12-volt heater assembly, and 6.8 to 9.0 ohms for the 24-volt heater assembly.

   Some early models of the Bendix® AD-9® air dryer will have resistance readings of 1.0 to 2.5 ohms for the 12-volt heater assembly and 4.8 to 7.2 ohms for the 24-volt heater assembly. If the resistance is higher than the maximum stated, replace the purge valve housing assembly, which includes the heater and thermostat assembly.

   Warm the end cover assembly to over 90°F and again check the resistance. The resistance should exceed 1000 ohms. If the resistance values obtained are within the stated limits, the thermostat and heater assembly is operating properly. If the resistance values obtained are outside the stated limits, replace the purge valve housing assembly, which includes the heater and thermostat assembly.

REBUILDING THE BENDIX® AD-9® AND AD-9® PG (WITH PURAGUARD® COALESCING FILTER) AIR DRYERS

GENERAL

If, after completing the routine operation and leakage tests, it has been determined that one or more components of the air dryer requires replacement or maintenance, refer to the maintenance kit listing in this manual or the *Bendix Quick Reference Catalog (BW1114)* for complete kit information.

When rebuilding or replacing components of the air dryer, use only genuine Bendix® parts. For ease in servicing the air dryers desiccant cartridge assemblies, it is recommended that the air dryer be removed from the vehicle.

The kit illustrations on the following pages show the kit contents and will be referenced throughout the rebuilding procedures.

AD-9 AND AD-9 PG AIR DRYER REMOVAL

1. Park the vehicle on a level surface and prevent movement by means other than the brakes.
2. Drain all reservoirs to 0 psi (0 kPa) – Caution: the compressor discharge line may still contain residual pressure.
3. Identify and disconnect the three air lines from the end cover and note the position of the end cover ports relative to the vehicle. *See Figure 1*.
4. Unplug the vehicle wiring harness from the heater and thermostat assembly connector on the purge valve housing assembly. *See Figure 6.*
5. Loosen the 5/16" hex cap screw and sleeve nut securing the upper mounting strap to the upper mounting bracket. *See Figure 7, illustration A.*

   Some air dryers may contain a one piece upper mounting strap as shown in Figure 7, illustration B. If this type of strap is present, loosen the adjustment locknut and remove the strap and isolator from the upper bracket.
6. Mark and remove the two 3/8" end cover cap screws, locknuts, and four special washers that secure the lower mounting bracket to the end cover. Also be sure to mark these two holes of the end cover. (These bolts are longer than the other 6 bolts.) Retain the mounting hardware. *See Figure 7, illustrations A & B.*
7. Remove the air dryer from the vehicle.

MAINTENANCE KITS

Kit Part Number	Service New (S) or Reman Exchange (RX)	Purge Valve Type	Heater	Connector Color	Kit Description	Illustration
107695	S	–	–	–	Complete Mounting Bracket Kit - Contains the upper and lower brackets as well as the necessary mounting hardware	A
5002080	S	–	–	–	Mounting Kit	B
5009610	S	–	–	–	Mounting Kit with Isolator	
107799	S	–	–	–	End Cover Check Valve Assembly Replacement - 3/4 inch thread size	C
107800N	S	–	–	–	End Cover Check Valve Assembly Replacement - 1/2 inch thread size	
5005037	S	Hard Seat	–	–	Purge Valve Housing Maintenance Kit - Contains the parts necessary to rebuild the air portion of the purge valve housing and does not include the heater and thermostat	D
5005893	S	Soft Seat	–	–		
K041395	S	–	–	–	Universal Check Valve Kit	E
5003838	S	–	–	–	Exhaust Cover Kit	F
5004224N	S	–	–	–	Silencer Kit	G
107796	S	–	–	–	Desiccant Cartridge Replacement Kit - Contains the parts necessary to change the desiccant cartridge only. Non-PG Air Dryer	H
107794X	RX	–	–	–		
K028830	S	–	–	–	Desiccant Cartridge Replacement Kit - Contains the parts necessary to change the desiccant cartridge only. PG Air Dryer	
109960	S	–	–	–	Makeup Line Kit	I
5000457	S	–	–	–		
109961	S	–	–	–	Adaptor Kit	
800405	S	Soft Seat	12V-75W	White	Purge Valve Housing Assembly (w/heater and thermostat)	J
5004338	S	Soft Seat	24V-75W	Gray		
5004341X	RX	Soft Seat	12V-75W	White		
5004342X	RX	Soft Seat	24V-75W	Gray		
5004479	S	Hard Seat	12V-75W	White		
5004480	S	Hard Seat	24V-75W	Gray		
5004381	S	Hard Seat	24V-100W	Yellow		
5004339	S	DLU	12V-75W	White		
5004340	S	DLU	24V-75W	Gray		
5006580	S	DLU	24V-100W	Yellow		
See Catalog BW1114	S and RX	–	–	–	End Cover Replacement	K
109578	S	–	12V-75W	White	Heater and Thermostat Kit	L
109579	S	–	24V-75W	Gray		
5002595	S	–	24V-100W	Yellow		
109871N	S	–	–	–	Heater Electrical Splicing Kit	M
113209	S	–	–	–	Universal Mounting Plate	N

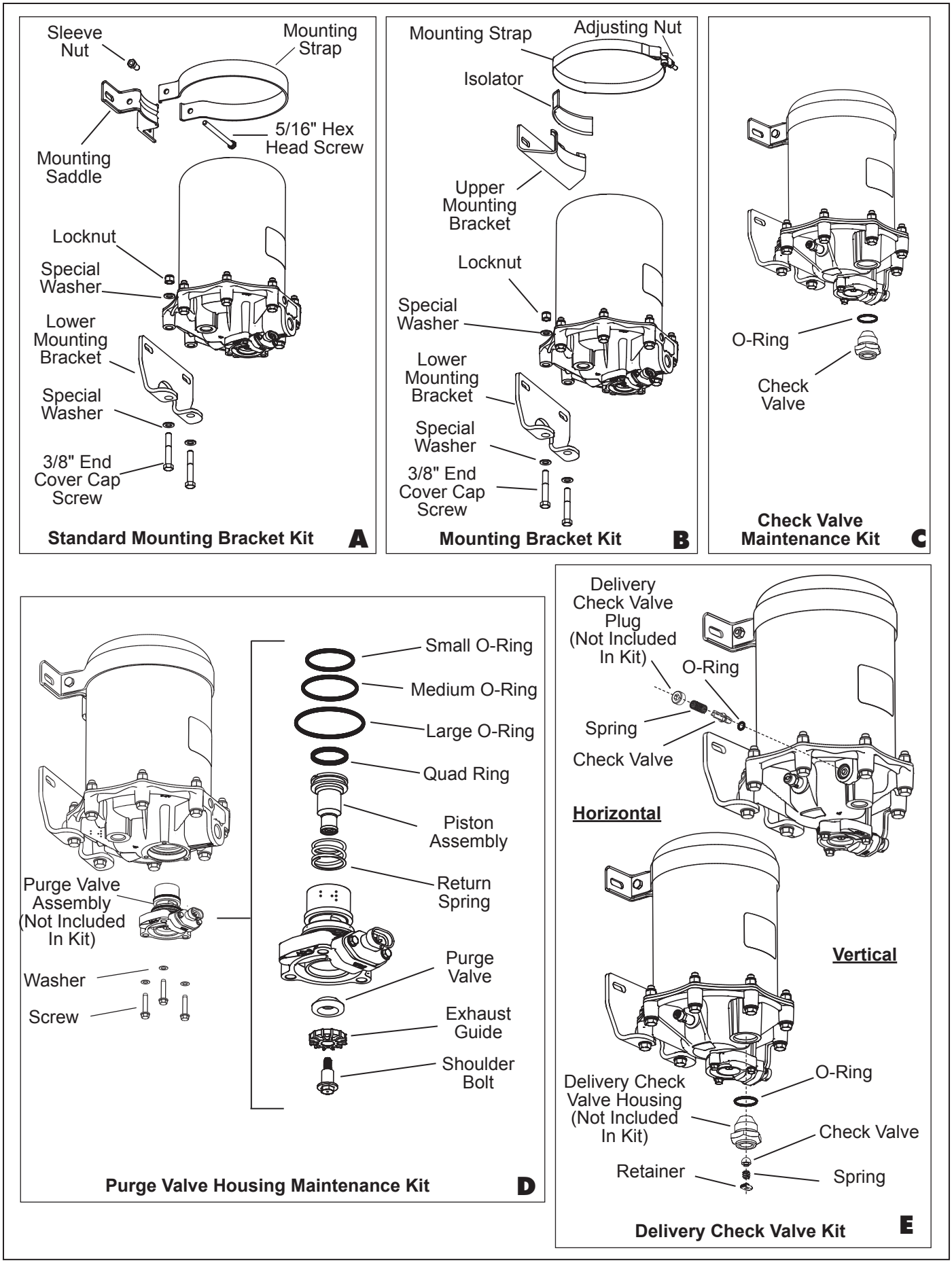

Figure 7 – Maintenance Kit Contents (Illustrations A Through E)

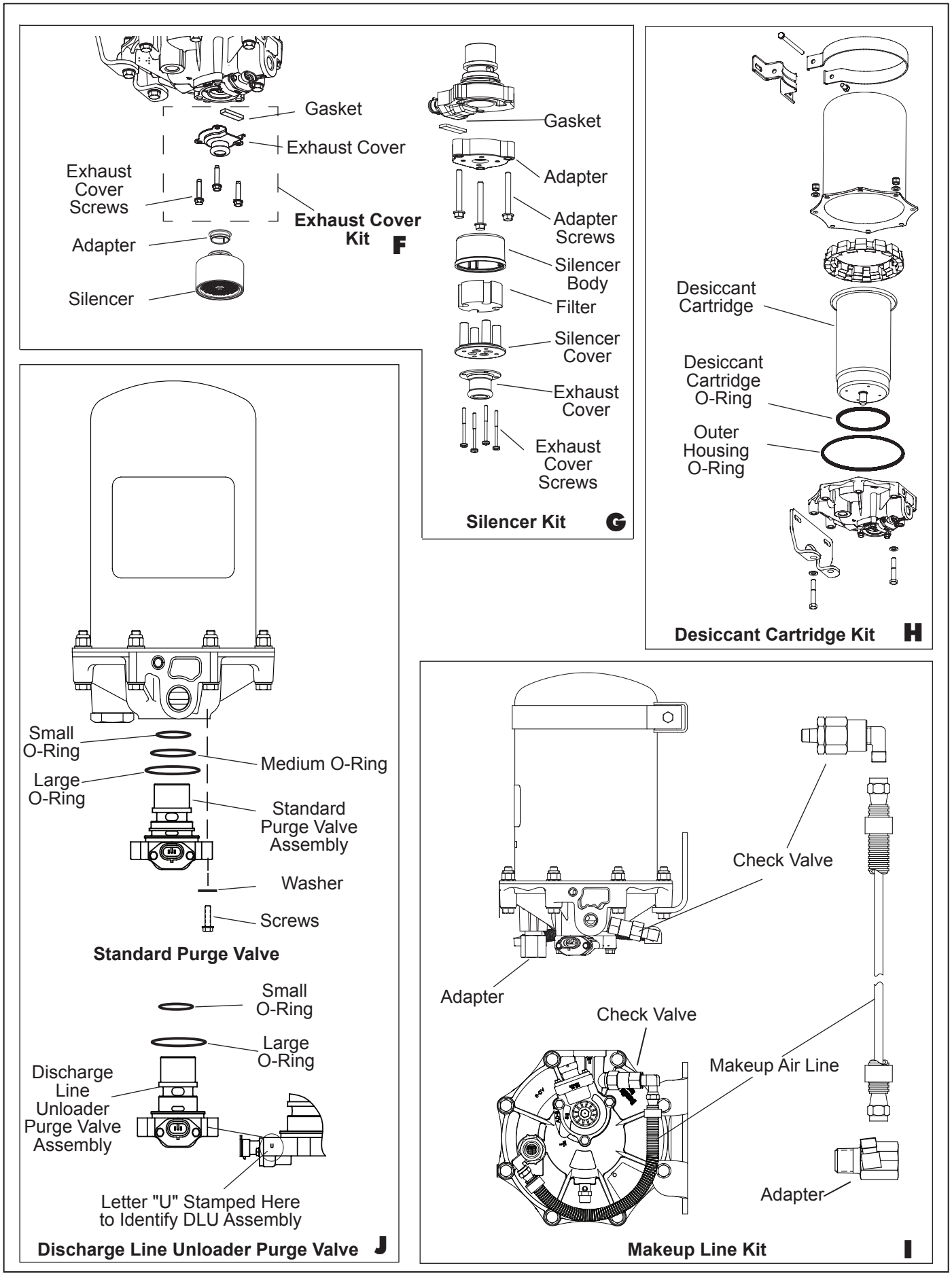

Figure 8 – Maintenance Kit Contents (Illustrations F Through J)

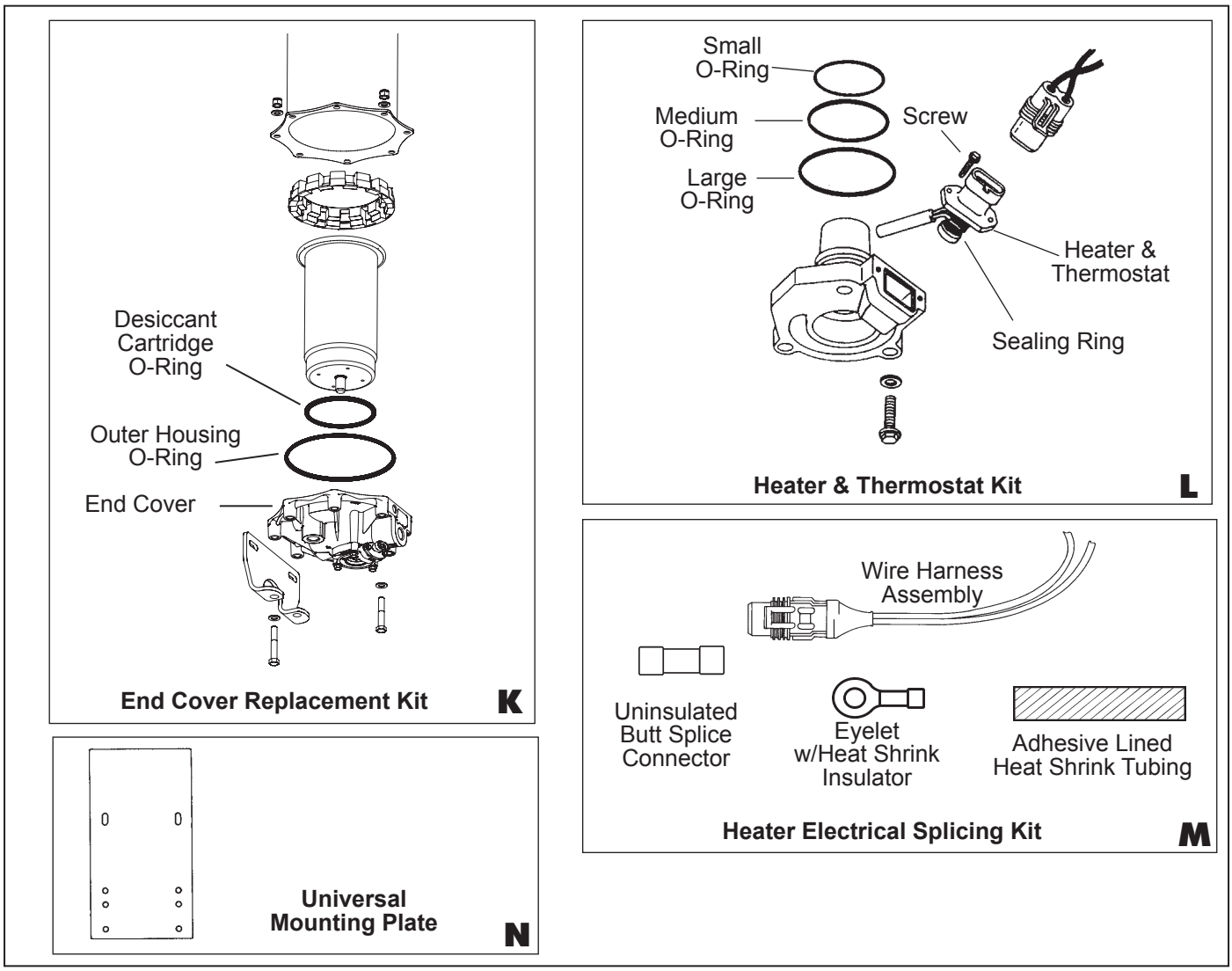

Figure 9 – Maintenance Kit Contents (Illustrations K Through N)

DISASSEMBLY

The following disassembly procedure is presented for reference purposes and presupposes that a major rebuild of the Bendix® AD-9® or AD-9® PG (with PuraGuard® coalescing filter) air dryer is being undertaken. Several replacement parts and maintenance kits are available which do not require full disassembly. The instructions provided with these parts and kits should be followed in lieu of the instructions presented here. *Refer to Figures 7, 8, and 9 during disassembly.*

Caution: While performing service on the AD-9 and AD-9 PG air dryers, it is <u>not</u> recommended that a clamping device (vise, C-clamp, etc.) be used to hold any die cast aluminum component, as damage may result. To hold the end cover, install a pipe nipple in the supply port and clamp the nipple into a vise.

<u>Delivery Check Valve Removal</u>

The current style AD-9 air dryer end cover has a horizontal delivery check valve while earlier styles contained a vertical design. Identify the style of AD-9 air dryer end cover and proceed to the appropriate step for removal. *See Figure 7, illustration E.*

1. *<u>Vertical Delivery Check Valve Removal</u>* – Using an adjustable wrench or a 1-3/4" socket, remove the delivery check valve assembly and o-ring. Remove the o-ring from the check valve assembly.

   <u>Horizontal Delivery Check Valve Removal</u> – Remove the delivery check valve plug from the air dryer end cover.

2. Remove the spring, check valve body, and o-ring.

Silencer Removal

If the air dryer purge valve has a silencer attached to it, identify the style of silencer before attempting to remove it. There are two different styles of silencers that have been used with the Bendix® AD-9® and AD-9® PG (with PuraGuard® coalescing filter) air dryers. One design is secured to the air dryer purge valve adapter with four cap screws that are visible from the bottom. The other is a snap-on design. *See Figure 8, illustration G.*

Screw Mounted Silencer

1. Remove the four screws that secure the exhaust cover, silencer cover, filter, and silencer body to the adapter.
2. Remove the three screws that secure the adapter to the purge valve. Remove the adapter and gasket.

Snap-on Silencer

1. Firmly grip the silencer and pull it away from the air dryer end cover.
2. Slide the adapter off of the exhaust cover.
3. Remove the three screws that secure the exhaust cover to the purge valve housing assembly of the end cover. Remove the exhaust cover and gasket.

Purge Valve Removal

1. Remove the three 1/4" screws that secure the purge valve housing assembly to the end cover assembly. Pull the purge valve housing assembly out of the end cover assembly. Remove the three o-rings from the exterior of the purge valve housing assembly. (The medium o-ring is not included in DLU models.) The o-rings may be lodged in the end cover bores, if so, they must be removed. *Refer to Figure 8, illustration J.*
2. Purge Valve Disassembly:

   Note: In some cases a flat (non-extended) exhaust cover is used. If an extended type exhaust cover is in use, (to accommodate the attachment of an exhaust hose), the exhaust cover must be carefully peeled off of the purge valve housing. **Use a thin flat blade to pry the exhaust cover off, taking care not to damage the potting material (RTV sealant) under the cover.**

   Removal of the piston from the purge valve housing assembly requires a tool to hold the head of the purge piston while unscrewing the purge valve shoulder bolt. Remove the piston from the purge valve housing assembly using a twelve point 1/4" socket to hold the head of the purge valve shoulder bolt. *See Figure 7, illustration D.*

   A. Secure the top of the purge piston assembly using the two opposing cast indentations and a removal tool. Remove the purge valve shoulder bolt from the bottom of the purge valve housing assembly. Remove the exhaust guide and purge valve from the purge valve housing.

   B. Remove the purge piston assembly and return spring from the opposite end of the purge valve housing assembly. Remove the quad ring from the purge piston assembly.

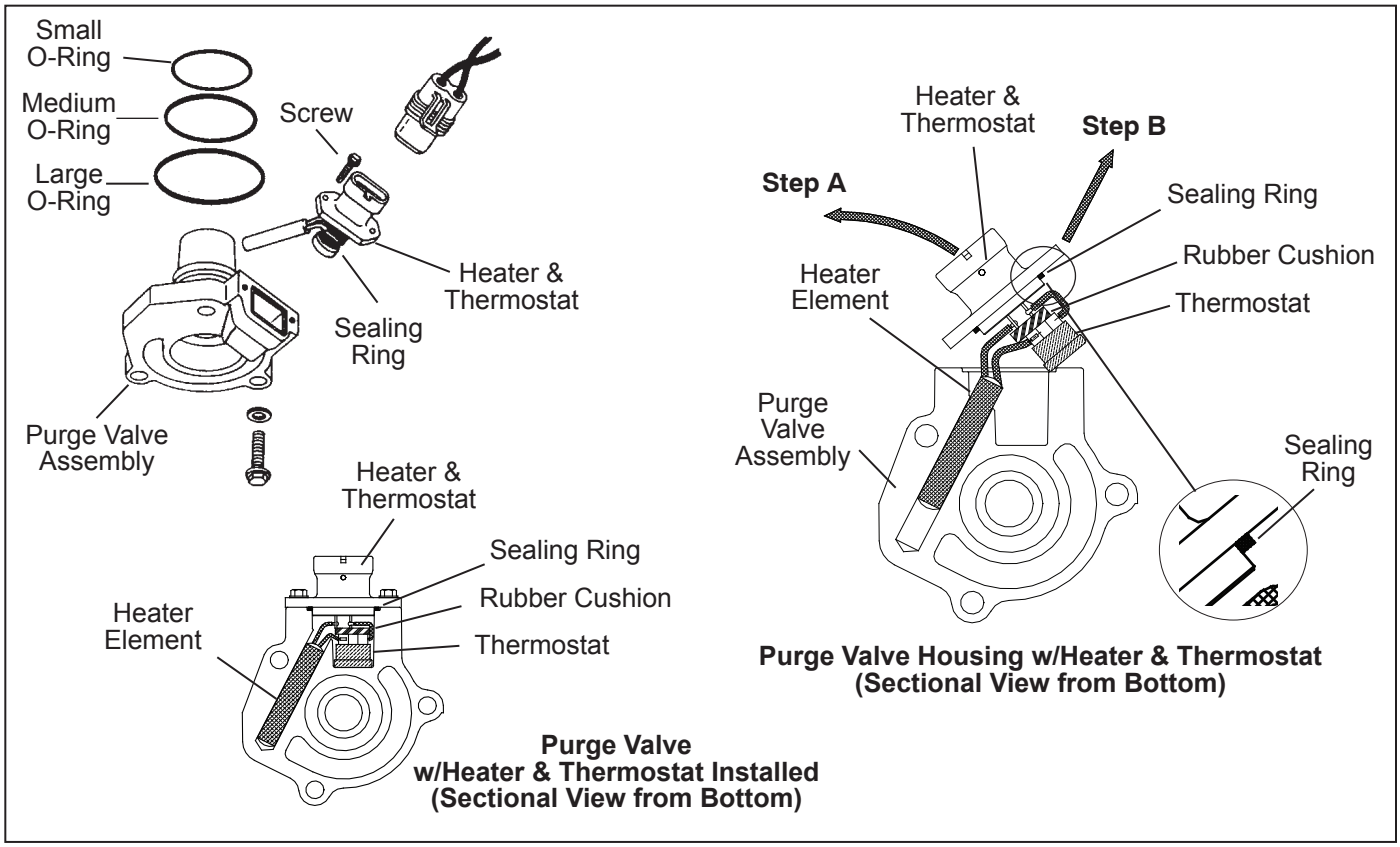

Figure 10 – Heater & Thermostat Removal and Installation

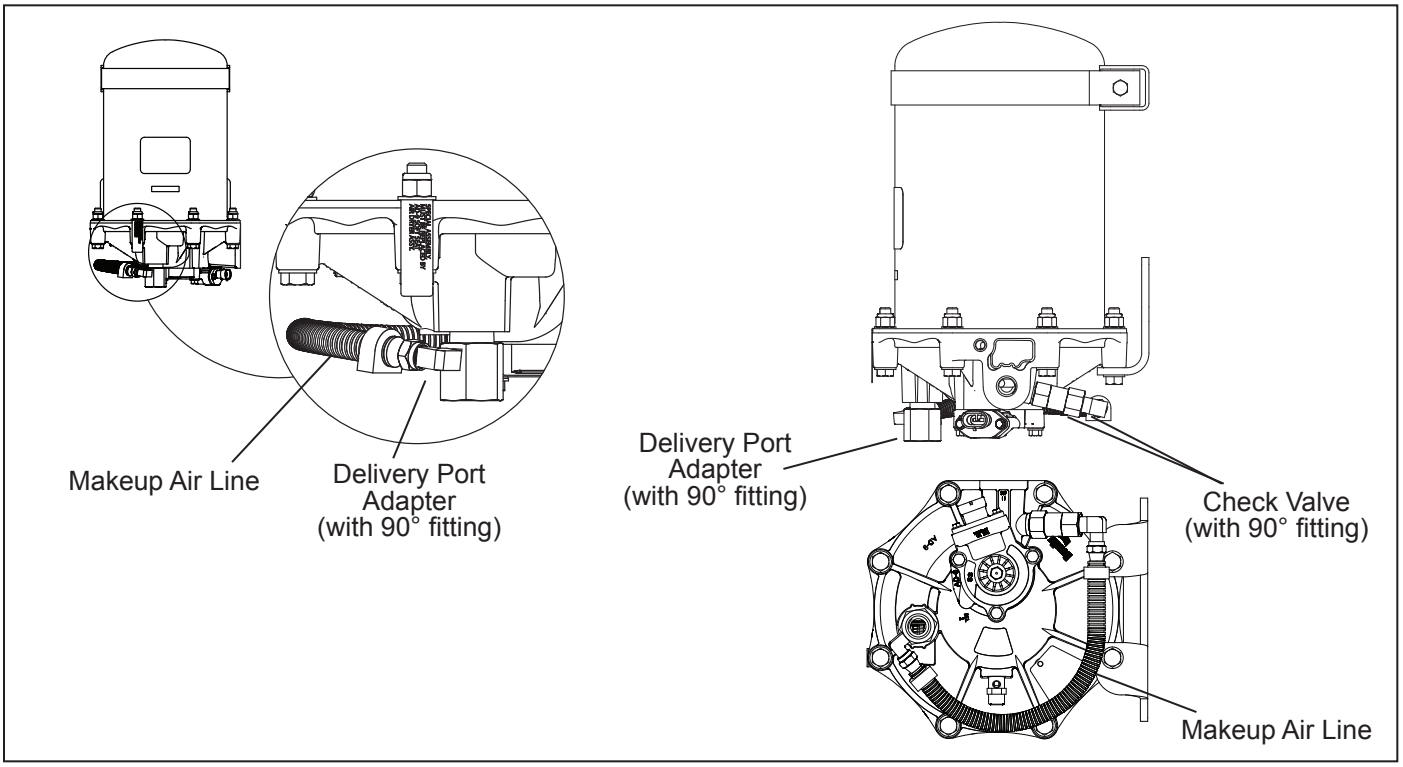

Figure 11 – Bendix® AD-9® Drop-In Air Dryer

Heater and Thermostat Assembly Removal

1. Remove the two screws that secure the heater and thermostat assembly to the purge valve assembly. *See Figure 9, illustration L for kit contents.*

⚠ CAUTION

DO NOT PULL THE HEATER & THERMOSTAT ASSEMBLY STRAIGHT OUT OF THE PURGE VALVE BODY! READ STEP 2 COMPLETELY BEFORE ATTEMPTING REMOVAL.

2. Study Figure 10 closely and note the "Y" shape of the Heater & Thermostat assembly in its installed position in the purge valve housing. As illustrated, remove the heater & thermostat assembly by gently "rotating" the connector to the left (Step A) until the thermostat clears the purge valve housing, then slide the heater element out, to the right and up (Step B).

End Cover Removal

1. Remove the remaining six 3/8" cap screws, locknuts and twelve special washers that secure the end cover to the air dryer housing. Separate the end cover and desiccant cartridge from the housing. *See Figure 9, illustration K.*
2. Remove the end cover to outer housing o-ring.
3. Do not remove the safety valve from the end cover unless it has been proven defective. If replacement is required, apply thread sealant or Teflon® tape on the threads of the replacement valve and torque to 120-400 in-lbs. *See Figure 1 for safety valve location.*
4. Place a strap or chain wrench around the desiccant cartridge so that it is approximately 2-3 inches away from the end cover. Rotate the cartridge counterclockwise until it completely separates from the end cover.

   Note: A substantial torque (up to 50 lb-ft) may be required to perform this disassembly.
5. Remove the desiccant cartridge o-ring from the end cover.

Drop-In Air Dryer Makeup Line Removal

1. Before beginning, note the approximate angle of the fittings, check valve and the general routing of the makeup line on the air dryer. It is important that the same approximate routing be duplicated during re-installation. *See Figure 11.*
2. Disconnect the makeup line from the 90° fitting on the check valve.
3. Disconnect the makeup line from the 90° fitting on the port adapter itself or the check valve. Remove the adapter along with the attached 90° fitting.

CLEANING & INSPECTION

1. Using mineral spirits or an equivalent solvent, clean and thoroughly dry all metal parts.
2. Inspect the interior and exterior of all metal parts that will be reused for severe corrosion, pitting, and cracks. Superficial corrosion and/or pitting on the exterior portion of the upper and lower body halves is acceptable.

3. Inspect the bores of both the end cover and the purge valve housing for deep scuffing or gouges.
4. Make certain that all purge valve housing and end cover passages are open and free of obstructions.
5. Inspect the pipe threads in the end cover. Make certain they are clean and free of thread sealant.
6. Inspect the purge valve housing bore and seats for excessive wear and scuffing.
7. Inspect the purge valve piston seat for excessive wear.
8. Inspect all air line fittings for corrosion. Clean all old thread sealant from the pipe threads.
9. All o-rings removed should be discarded and replaced with new o-rings provided in the appropriate kit(s).

Any component exhibiting a condition described in step 1 to 8 should be replaced.

ASSEMBLY

The following assembly procedure is presented for reference purposes and presupposes that a major rebuild of the Bendix® AD-9® or AD-9® PG (with PuraGuard® coalescing filter) air dryer is being undertaken. Several replacement parts and maintenance kits are available which do not require full disassembly. The instructions provided with these parts and kits should be followed in lieu of the instructions presented here. *Refer to Figures 7, 8, and 9 during assembly.*

Purge Valve Housing Assembly

1. Prior to assembly, coat all o-rings, o-ring grooves, and bores with a generous amount of the lubricant included in the maintenance kit. *See Figure 7, illustration D.*
   A. Install the quad-ring in its groove on the Outside Diameter (O.D.) of the purge piston. Place the return spring in the bore of the purge valve housing. Insert the purge piston into the Inside Diameter (I.D.) of the return spring. Place the purge valve guide onto the shoulder bolt followed by the purge valve. Using a ratchet or wrench, screw the purge valve, purge valve guide, and shoulder bolt into the purge housing until it bottoms. This will require a tool to hold the top of the purge piston from rotating as the shoulder bolt is screwed into the bottom of the purge piston to complete the purge valve assembly. Torque the shoulder bolt to 60-90 in-lbs.
   B. Install the o-rings on the purge valve housing, placing each in its appropriate location. Note the medium o-ring is not used on Discharge Line Unloaded (DLU) models. If the exhaust cover was removed during disassembly, install it on the purge valve assembly making certain the “bubble” portion is positioned over the thermostat. Install the assembled purge valve housing in the end cover. Make certain to orient both parts such that the connector is approximately 10° clockwise from the supply port, while making certain the purge valve housing is fully seated against the end cover. Secure the purge valve housing to the end cover using the three 1/4" self-tapping screws. Start all three screws by hand then torque to 50-80 in-lbs.

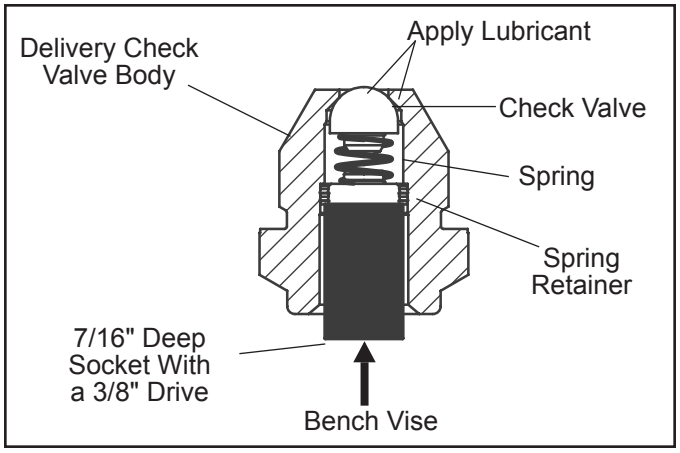

Figure 2 – Vertical Delivery Check Valve

Delivery Check Valve Assembly

The current style AD-9 air dryer end cover has a horizontal delivery check valve while earlier styles contained a vertical design. Identify the style of AD-9 air dryer end cover and proceed to the appropriate step for installation. *See Figure 7, illustration E.*

Vertical Delivery Check Valve

1. Assemble the spring to the retainer and check valve. Ensure the spring is fully seated on the retainer and the check valve.
2. Lubricate the entire spherical surface of the check valve and bore chamfer of the check valve housing with the lubricant provided in the kit.
3. Place the retainer, spring, and check valve sub-assembly into the check valve housing. Press the retainer using a 7/16" deep socket with a 3/8" drive, and a vise as shown in Figure 12.
4. Inspect the bore of the end cover. Make certain that the end cover passage is open and free of obstructions.
5. Install the o-ring on the outer body of the delivery check valve assembly. Ensure the o-ring is seated properly and not twisted. Lubricate the o-ring.
6. Install the delivery check valve assembly into the end cover. Torque to 200-250 in-lbs.

Horizontal Delivery Check Valve

1. Lubricate the o-ring and the long check valve body with the lubricant provided. Use only the lubricant contained in the kit.
2. Install the o-ring on the long check valve body. Push the o-ring down over the 3 guide lands until it is in the o-ring groove. Ensure the o-ring is seated properly and not twisted.
3. Install the spring on the white check valve body so that the small coils of the spring slip over the check valve body.

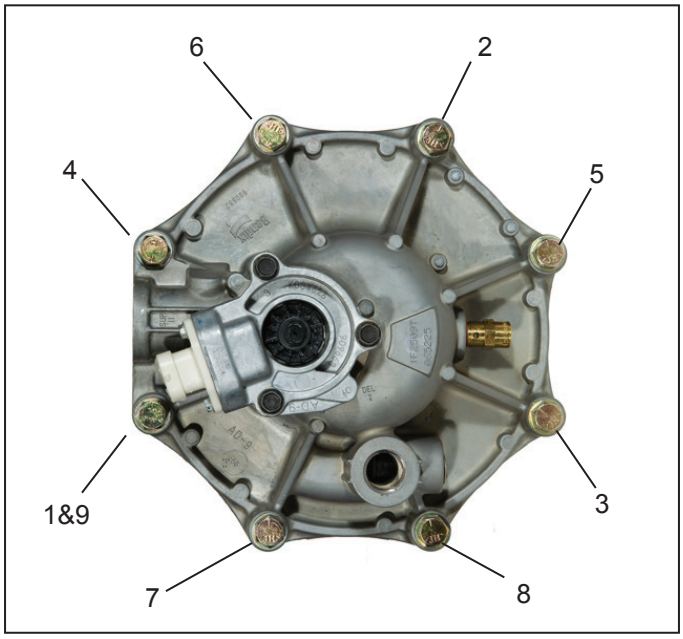

Figure 13 – End Cover to Housing Torque Pattern

4. Install the assembled long check valve body, o-ring, and spring in the end cover delivery check valve port so that the o-ring rests on its seat in the end cover and the spring is visible.
5. Install the delivery check valve plug that was removed during the disassembly into the air dryer end cover. *See Figure 5.* Torque the plug to 130-170 in-lbs.

Drop-In Air Dryer Makeup Line Assembly

1. Install the adapter and the attached 90° fitting in the air dryer. Take care that the replacement adapter and attached fitting is in the same approximate position as the original. *See Figure 11.*

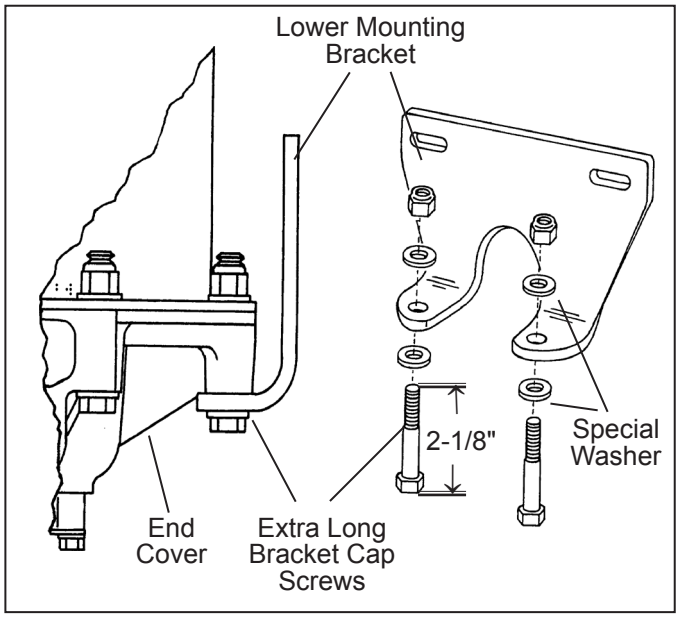

Figure 14 – Lower Mounting Bracket Installation

2. Install the check valve and fitting, taking care that the replacement is in the same approximate position as the original.
3. Install the makeup line and tighten the tubing nuts at both ends while preventing the 90° fittings from turning. Tighten the nuts sufficiently to prevent air leakage, but do not over tighten.

Air Dryer Assembly

1. Install the desiccant cartridge o-ring in its groove in the end cover. Using a light coat of lubricant (included in the kit), lubricate the bottom of the desiccant cartridge in the area that will contact the o-ring and end cover. Screw the desiccant cartridge into the end cover until contact is made between it and the o-ring. Using a strap or chain wrench positioned 2-3 inches from the bottom of the cartridge, turn the desiccant cartridge clockwise 180-225 degrees beyond the position where initial contact was made between the cartridge and end cover o-ring. Torque should not exceed 50 ft-lbs.
2. Install the end cover outer housing o-ring on the shoulder in the end cover. Place the housing over the desiccant cartridge and align the holes. Install the six 3/8" cap screws, locknuts, and twelve special washers, making certain they are in the proper position as marked during disassembly. The two longer 3/8" cap screws will be used to secure the air dryer to its mounting bracket. Tighten the six cap screws and nuts in a star pattern in a fashion similar to Figure 13; depending on the lower bracket location. Torque to 270-385 in-lbs.

   Note: The two remaining bolt holes in the end cover and two 3/8" cap screws must be the ones marked during disassembly to ensure proper orientation of the ports and adequate length of the cap screws.

INSTALLATION

1. Install the assembled air dryer back onto the vehicle by slipping it into the upper mounting bracket. Align the two unused holes in the end cover with the bottom mounting bracket such that the bottom bracket supports the air dryer. The air dryer end cover should rest on the bracket. Using the remaining two 3/8" cap screws, four special washers, and two locknuts, secure the air dryer to the lower bracket. Tighten, then torque the two remaining cap screws to 270-385 in-lbs. *See Figure 14.*
2. *See Figure 7, illustrations A and B*, to determine the mounting bracket type.

   Illustration A Style - Attach the mounting strap to the air dryer and secure it to the mounting saddle with the 5/16" x 4-1/2" hex cap screw and nut. Torque to 80-120 in-lbs.

   Illustration B Style - Place the isolator between the upper bracket and the air dryer. Secure the air dryer to the upper bracket with the mounting strap. Tighten the adjusting nut to 50-60 in-lbs.

3. Reconnect the three air lines to the proper ports on the end cover (identified during disassembly).
4. Reconnect the vehicle wiring harness to the air dryer heater and thermostat assembly connector by plugging it into the air dryer connector until its lock tab snaps in place.
5. Before placing the vehicle back into service, perform the *Operation and Leakage Tests* stated earlier in this manual.

RETROFITTING THE BENDIX® AD-9® AIR DRYER

GENERAL

The following retrofit instructions are presented for reference purposes only since Bendix® aftermarket retrofit and replacement air dryers are packaged with the most up-to-date installation instructions. The instructions packaged with the Bendix® AD-9® and AD-9® PG (with PuraGuard® coalescing filter) air dryers should be followed in lieu of those presented here.

The preceding portion of this manual deals with "in-service" repair and/or replacement of the AD-9 and AD-9 PG air dryers. The portion of the manual that follows is concerned with installing an AD-9 or AD-9 PG air dryer on a vehicle not previously equipped with one.

VEHICLE APPLICATION REQUIREMENTS

The basic application requirements presented here apply to a standard air dryer installation. The majority of highway vehicles in use today will meet these basic requirements however, some may not. Examples of vehicles that may not meet the requirements include, bulk trailer unloading operations and other high air consumption/continuous flow systems. While the AD-9 or AD-9 PG air dryer can be used on these vehicles, the standard installation procedure presented in this manual may require modification to ensure proper operation and service life. Consult your local authorized Bendix parts outlet or sales representative for additional information.

1. Charge Cycle Time - The Bendix AD-9 and AD-9 PG air dryers are designed to provide clean, dry air for the brake system. When a vehicle's air system is used to operate non-brake air accessories, it is necessary to determine that during normal, daily operation the compressor should recover from governor "cut-in" to governor "cut-out" (usually 100 psi to 120 psi) in 90 seconds or less at engine RPMs commensurate with the vehicle vocation. If the recovery time consistently exceeds this limit, it may be necessary to "bypass" the air accessory responsible for the high air usage. Consult your local authorized Bendix parts outlet or sales representative for additional information.

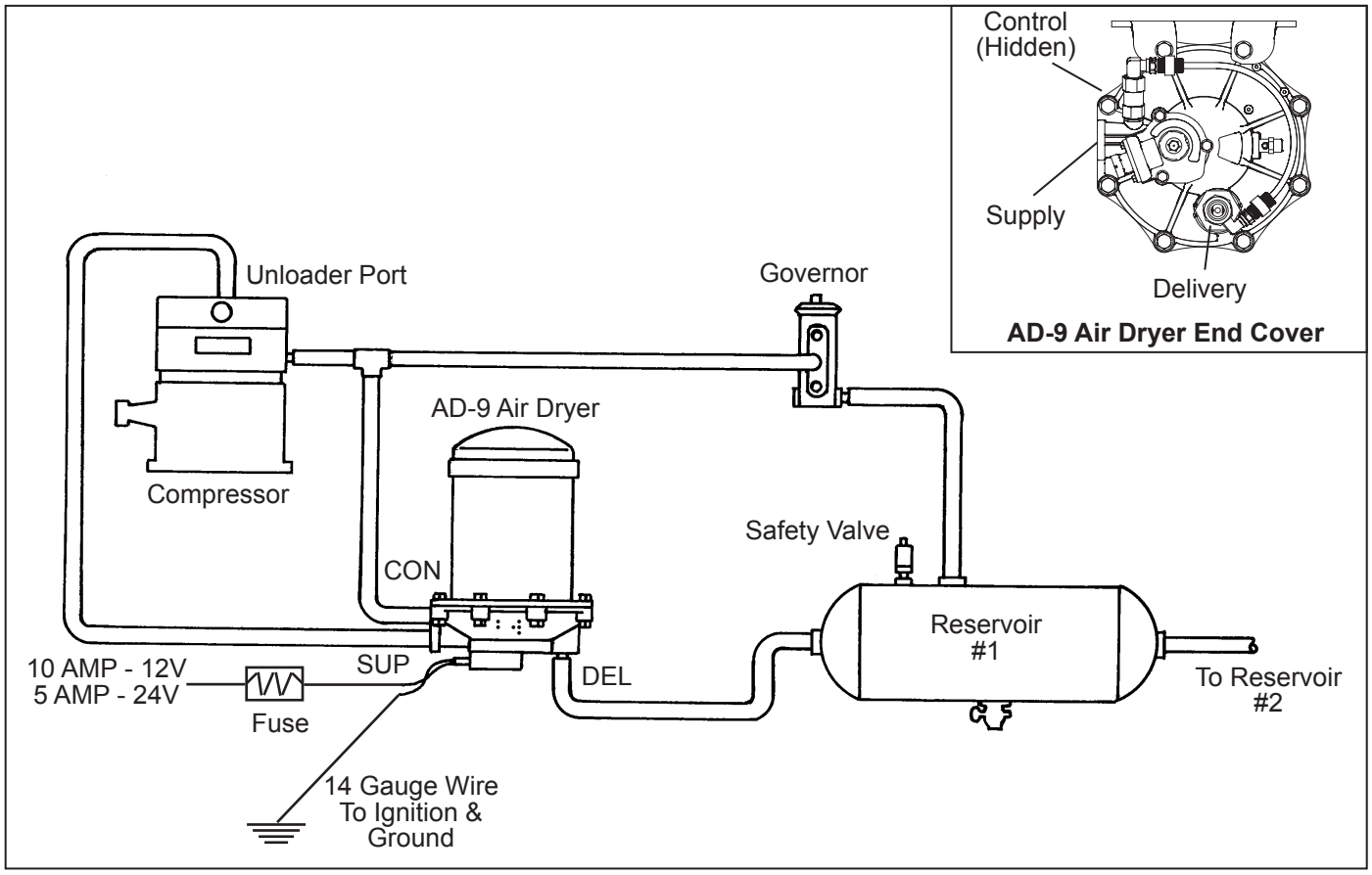

Figure 11 - Bendix® AD-9® & AD-9® PG (with PuraGuard® Coalescing Filter) Air Dryer Charge Cycle

2. Purge Cycle Time - During normal vehicle operation, the air compressor **must remain unloaded for a minimum of 20 seconds for the standard air dryer, or 30 seconds for the extended purge model.** These minimum purge times are required to ensure complete regeneration of the desiccant material. If the purge time is occasionally shorter than the times specified, no permanent ill effect should be expected; however, if the purge time is consistently less than the minimum, an accessory by-pass system must be installed.
3. European Air Brake Systems - Brake systems that incorporate compressors without integral unloading mechanisms, and/or utilize a compressor discharge line unloader valve, have special air dryer installation requirements. Consult your local authorized Bendix® parts outlet or sales representative for additional information.
4. Holset "E or QE" Type Air Compressors - In order for the Bendix® AD-9® or AD-9® PG (with PuraGuard® coalescing filter) air dryer to function properly when installed with the Holset Type "E or QE" compressor, several specialized Holset components are required. Consult your local authorized Holset parts outlet or sales representative for additional information.
5. Use of Standard or Extended Purge AD-9 or AD-9 PG Air Dryer - Use the following guidelines:

Total Vehicle Reservoir Volume	Bendix AD-9® or AD-9® PG Air Dryer Requirement
Less than 9,000 cu. in.	Standard Air Dryer
9,000 - 12,500 cu. in.	Extended Purge Air Dryer
Greater than 12,500 cu. in.	Contact Bendix Rep. or Bendix Engineering

VEHICLE PREPARATION

1. Park the vehicle on a level surface and prevent movement by means other than the brakes.
2. Drain all reservoirs to 0 psi (0 kPa).

LOCATING THE BENDIX® AD-9® AIR DRYER ON THE VEHICLE

1. The AD-9 and AD-9 PG air dryers must be mounted vertically (purge exhaust toward road surface) outside the engine compartment in an area of air flow while the vehicle is in motion. The air dryer must not be exposed to direct wheel splash (located behind axle mud flap is acceptable).
2. Locate the air dryer as close to the first (supply) reservoir as possible.
3. Do not locate the air dryer near heat producing components, such as the vehicle exhaust, and make certain adequate clearance from moving components (e.g. drive shaft, suspension, pitman arm, etc.) is provided.
4. Locate the air dryer on the vehicle so that a minimum of 11 inches (28 cm) clearance below the end cover is available to allow servicing. Alternatively, provide access to the bracket bolts so the unit may be removed for servicing.
5. When choosing the mounting location for the AD-9 or AD-9 PG air dryer, note the discharge line length requirements stated under the heading *Connecting the Air Lines*, elsewhere in this instruction sheet.

   Important Note: Under normal operating conditions, the maximum inlet air temperature for the AD-9 and AD-9 PG air dryers is 160° F.

MOUNTING THE BENDIX AD-9 AND AD-9 PG AIR DRYER

1. To install the lower mounting bracket on the air dryer, it will be necessary to remove and discard two of the end cover bolts and locknuts. To determine which end cover bolts to utilize to attach the lower bracket, take into consideration the piping connections required to install the air dryer and use those that will best position the unit for ease of installation. Locate the bracket such that it cradles the end cover as shown in Figure 9. Utilizing the two 2-3/8" long cap screws, locknuts and special washers provided with the AD-9 and AD-9 PG air dryer retrofit unit, attach the lower mounting bracket and torque to 270-385 in-lbs.
2. Assemble the mounting strap and upper mounting bracket as illustrated in Figure 10, by utilizing the 5/16" cap screw and sleeve nut.
3. Place the upper bracket assembly onto the shell of the AD-9 or AD-9 PG air dryer and orient it so that it bears entirely on the cylindrical surface and does not extend onto the domed top. The slot spacing between the upper and lower bracket should be a minimum of 5.5 inches apart. Do not tighten strap onto the shell at this time.
4. Mount the air dryer on the vehicle using 3/8" bolts (grade 5 min.) and washers. Torque to 25 ft-lbs (300 in-lbs). After positioning and mounting the upper bracket assembly according to the installation requirements, torque the 5/16" nut to 80-120 in-lbs to tighten the strap onto the shell.

CONNECTING THE AIR LINES

PURGE CONTROL LINE

1. Install a purge control air line having a minimum inside diameter of 3/16 inches between the Bendix® AD-9® or AD-9® PG (with PuraGuard® coalescing filter) air dryer end cover control port and an unused unloader port on the governor. The control line must be plumbed direct to the governor and not in series with automatic drain valves, lubrication systems, etc.
2. The control line should slope downward to the end cover without forming potential water traps.

DISCHARGE LINE

General:

Refer to Appendix A, Table A of the Advanced Troubleshooting Guide for Air Brake Compressors (BW1971) available on bendix.com for recommended discharge line lengths and sizes for various vehicle applications and vocations.

PURGE EXHAUST LINE

1. If it is necessary to direct the AD-9 or AD-9 PG air dryer discharge contaminants away from vehicle components, it may be necessary to purchase a special exhaust cover for the AD-9 or AD-9 PG air dryer (Pc. No. 5003838). A one inch (25.4 mm) I.D. hose can be clamped on the special air dryer exhaust cover.

WIRING THE HEATER/THERMOSTAT

1. Determine the vehicle's electrical system voltage and make certain that the AD-9 or AD-9 PG air dryer that is to be installed contains the same voltage heater. Use the air dryer part number to confirm the proper voltage. The AD-9 and AD-9 PG air dryers are available with either a 12- or 24-volt heater which uses 75 watts of power.
2. A two lead, 12-inch, wire harness with attached weather resistant connector is supplied with all retrofit and replacement AD-9 and/or AD-9 PG air dryers. Connect one of the two leads of the wire harness to the engine kill or ignition switch. The remaining lead of the wire harness must be connected to a good vehicle ground (not to the air dryer or its mounting bracket). A fuse should be installed in the power carrying wire; install a 10 amp fuse for 12-volt heaters and a 5 amp fuse for 24-volt heaters.
3. Use 14 GA wire if it is necessary to lengthen the wire harness provided with the AD-9 or AD-9 PG air dryer. Make certain all wire splices are waterproofed.
4. Tie wrap or support all electrical wire leading to the AD-9 or AD-9 PG air dryer at 6-8 inch intervals. **Note:** Wires should have sufficient slack and not be completely taught.

TESTING THE BENDIX AD-9 AND AD-9 PG AIR DRYER

Before placing the vehicle in service, perform the following tests:

1. Close all reservoir drain cocks.
2. Build up system pressure to governor cut-out and note that the air dryer purges with an audible escape of air.
3. "Fan" the service brakes to reduce system air pressure to governor cut-in. Note that the system once again builds to full pressure and is followed by a purge at the air dryer exhaust.
4. It is recommended that the following items be tested for leakage to ensure that the AD-9 or AD-9 PG air dryer will not cycle excessively.
   (A) Total air system leakage (See *Bendix Air Brake Handbook, BW5057*).
   (B) Compressor unloader mechanism.
   (C) Governor.
   (D) Drain cock and safety valve in first (supply) reservoir.
   (E) All air connections leading to and from the first (supply) reservoir.

Bendix® AD-9® & AD-9® PG (with PuraGuard® Coalescing Filter) Air Dryer Troubleshooting

SYMPTOM	CAUSE	REMEDY
1. Dryer is constantly "cycling" or purging. Dryer purges frequently (every 4 minutes or less while vehicle is idling).	A. Excessive system leakage. IMPORTANT: Note whether air pressure loss is shown on dash gauge(s). Pressure loss shown on gauges is caused by service brake system or component leakage. Pressure loss NOT SHOWN on gauges is caused by supply system or component leakage.	A. <u>If leakage IS SHOWN on gauges</u>, test for excessive service brake system leakage. Allowable leakage: Pre-121 vehicles, single vehicles - 2 psi / minute. Tractor trailer - 3 psi / minute. 121 vehicles, single vehicle - 1 psi / minute per service reservoir. Tractor trailer - 3 psi / minute per service reservoir. Repair and retest as required.

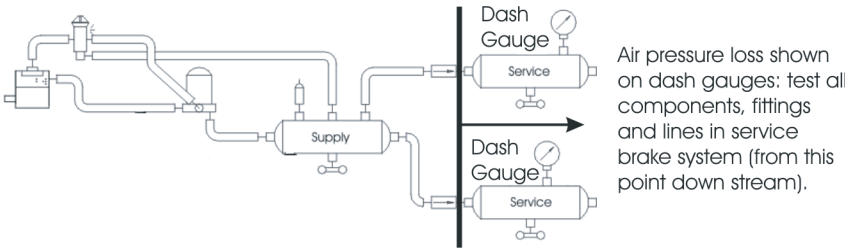

<u>If leakage is NOT SHOWN on gauges</u> test for excessive supply system leakage.

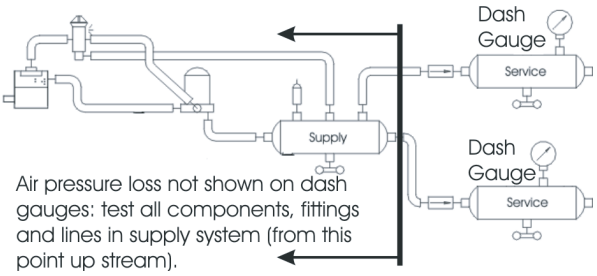

Remove drain cock or valve in supply reservoir (wet tank) and install air gauge. Build system pressure, allow air dryer to purge and observe air gauge in supply reservoir. Pressure drop should not exceed 1 psi per minute.

Perform tests 1 to 6 in the order presented.

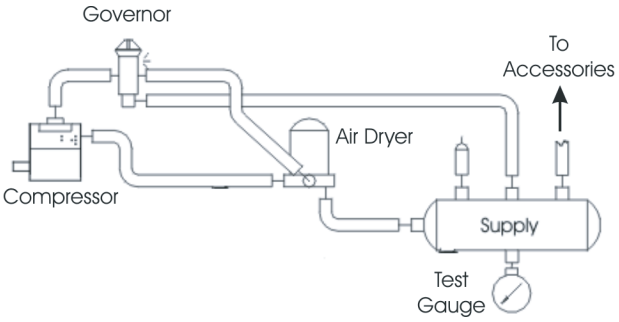

Bendix® AD-9® & AD-9® PG (with PuraGuard® Coalescing Filter) Air Dryer Troubleshooting		
SYMPTOM	**CAUSE**	**REMEDY**
1. Dryer is constantly "cycling" or purging. The dryer purges frequently (every 4 minutes or less while vehicle is idling). (*continued*)	A. Excessive system leakage. IMPORTANT: Note whether air pressure loss is shown on the dash gauge(s). Pressure loss shown on the gauges is caused by service brake system or component leakage. Pressure loss NOT SHOWN on the gauges is caused by supply system or component leakage. (*continued*)	1. Test fittings, hoses, lines, and connections. Apply soap solution to detect excessive leakage. Tighten or replace as needed then repeat the air dryer charge-purge cycle and observe the gauge installed in the supply reservoir. If leakage is within limits, remove gauge from reservoir and replace drain cock or valve. If excessive leakage is detected, continue testing. 2. Test the accessories connected to supply reservoir. Drain all air pressure from the system, disconnect all air lines leading to accessories (fan clutch, wipers, air seats, etc.) and plug the reservoir at the disconnection point. Build the air system pressure until the air dryer purges and observe the supply reservoir gauge. If the leakage is no longer excessive, repair or replace the leaking accessory. If excessive leakage is detected, continue testing. 3. Test for governor leakage. Build system pressure to governor cut-out, turn the engine off and apply soap a solution to the governor exhaust port and around the cap. Leakage should not exceed a 1 in. bubble in 5 seconds. Reduce the system pressure to 80 psi or less, and re-apply a soap solution. Leakage should not exceed a 1 inch bubble in 5 seconds. If excessive leakage is detected in either test, repair or replace the governor. 4. Test for compressor unloader leakage. Drain all air pressure from the system and remove the governor from the compressor. Temporarily plug the governor unloader port or air line that mated with, or connected to, the compressor. Build air system pressure until the air dryer purges then IMMEDIATELY SHUT OFF THE ENGINE. Observe the air gauge in the supply reservoir. If the leakage is within limits, replace the compressor unloaders. Re-connect the governor to the compressor (after removing the plug installed in the governor) and retest while observing the supply reservoir gauge. If excessive leakage is detected, continue testing. 5. Test the air dryer purge valve and outlet (delivery) check valve. Drain all air pressure from the system, remove the control line connection at the air dryer and plug the end of the air line leading to the governor (not the air dryer control port). Build system pressure to the governor cut-out and observe the air gauge. If little or no pressure drop is observed, replace the air dryer check valve. If the pressure drop continues, apply a soap solution to the air dryer purge exhaust and purge control port (where the control line was removed). Leakage should not exceed a 1 inch bubble in 5 seconds. If leakage is excessive, repair or replace the purge valve assembly.

Bendix® AD-9® & AD-9® PG (with PuraGuard® Coalescing Filter) Air Dryer Troubleshooting

SYMPTOM	CAUSE	REMEDY
1. Dryer is constantly "cycling" or purging. Dryer purges frequently (every 4 minutes or less while vehicle is idling). (*continued*)	A. Excessive system leakage. IMPORTANT: Note whether air pressure loss is shown on the dash gauge(s). Pressure loss shown on the gauges is caused by service brake system or component leakage. Pressure loss NOT SHOWN on the gauges is caused by supply system or component leakage. (*continued*)	6. With a gauge installed at RES port of governor, the pressure should not drop below the "cut-in" pressure at the onset of the compressor "unloaded" cycle. If the pressure drops, check for "kinks" or restrictions in the line connected to the RES port. The line connected to the RES port on the governor must be the same diameter, or preferably larger than, the lines connected to the UNL port(s) on the governor.
	B. Leaking purge valve housing assembly and/or o-rings in the air dryer end cover.	B. With the supply port open to atmosphere, apply 120 psi at the control port. Apply a soap solution to the supply port and exhaust port (purge valve seat area). Permissible leakage - 1 inch bubble in 5 seconds.
	C. Holset® "E" type compressor.	C. Test the Holset® E Compressor unloader system with feedback line and a check valve for proper operation. Make sure the Holset ECON is not in use with the drop-in version of the air dryer, if so, remove it and retest. When installing a Bendix Drop-In air dryer in a system equipped with a Holset E or QE compressor, remove the Holset ECON valve along with its feedback and governor control line.

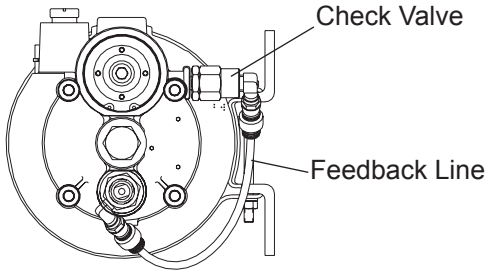

Typical Drop-In Air Dryer End Cover

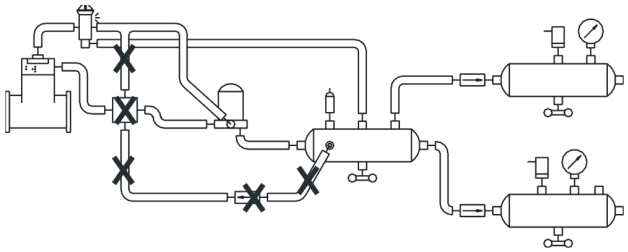

Bendix® AD-9® & AD-9® PG (with PuraGuard® Coalescing Filter) Air Dryer Troubleshooting		
SYMPTOM	**CAUSE**	**REMEDY**
2. Water and/or Oil in Supply or Service Reservoir.	A. Desiccant requires replacement - excessive contaminants in the desiccant cartridge assembly.	A. Replace the desiccant cartridge.
	B. Improper discharge line length or improper line material. Maximum air dryer inlet temperature is exceeded.	B. Refer to section entitled *Connecting the Air Lines* as well as Appendix A, Table A columns 1 & 2 of the *Advanced Troubleshooting Guide for Air Brake Compressors (BW1971)* then check line size and length.
	C. Air system charged from outside air source (outside air not passing through the air dryer)	C. If the system must have an outside air fill provision, outside air should pass through the air dryer. This practice should be minimized.
	D. Air dryer not purging (*see Symptom #5*).	D. *See Symptom #5*.
	E. Purge (air exhaust) time insufficient due to excessive system leakage (*see causes for Symptom #1*).	E. Check causes and remedies for Symptom #1.
	F. Excessive air usage, the duty cycle is too high - the air dryer is not compatible with the vehicle air system requirement (improper air dryer/vehicle application). NOTE: Duty Cycle is the ratio of time the compressor spends building air to total engine running time. Air compressors are designed to build air (run "loaded") up to 25% of the time. Higher duty cycles cause conditions that affect air brake charging system performance which may require additional maintenance. Factors that add to the duty cycle are: air suspension, additional air accessories, use of an undersized compressor, frequent stops, excessive leakage from fittings, connections, lines, chambers, or valves, etc.	F. *See Appendix A, Table A, column 1* of the *Advanced Troubleshooting Guide for Air Brake Compressors (BW1971)*, for recommended compressor sizes. If the compressor is "too small" for the vehicle vocation (for example, where a vehicle's vocation has changed or service conditions exceed the original vehicle or engine OE spec's) then upgrade the compressor. Note: The costs incurred (e.g. installing a larger capacity compressor, etc.) are not covered under the original compressor warranty. Charge Cycle Time - Bendix® AD-9® and AD-9® PG air dryers are designed to provide clean, dry air for the brake system. When a vehicle's air system is used to operate non-brake air accessories it is necessary to determine that; during normal, daily operation the compressor should recover from governor "cut-in" to governor "cut-out" (usually 100 psi to 120 psi) in 90 seconds or less at engine RPM's commensurate with the vehicle vocation. If the recovery time consistently exceeds this limit, it may be necessary to "bypass" the air accessory responsible for the high air usage. An example of where a by-pass system would be required is when the compressor is used to pressurize a tank trailer for purposes of off-loading product. Consult your local authorized Bendix parts outlet or sales representative for additional information.

Bendix® AD-9® & AD-9® PG (with PuraGuard® Coalescing Filter) Air Dryer Troubleshooting		
SYMPTOM	**CAUSE**	**REMEDY**
2. Water and/or Oil in Supply or Service Reservoir. (*continued*)	(*Continued*)	Purge Cycle Time - During normal vehicle operation, the air compressor must remain unloaded for a minimum of 20 seconds for the standard Bendix® AD-9® and AD-9® PG air dryer or 30 seconds for the extended purge model. These minimum purge times are required to ensure complete regeneration of the desiccant material. If the purge time is consistently less than the minimum, an accessory by-pass system must be installed. Consult your local authorized Bendix parts outlet or sales representative for additional information. European Air Brake Systems - Brake systems that incorporate compressors without integral unloading mechanisms and/or utilize a compressor discharge line unloader valve have special air dryer installation requirements. Consult your local authorized Bendix parts outlet or sales representative for additional information. Air Compressor Size - Although the AD-9 and AD-9 PG air dryers can be used in conjunction with larger compressors, it was designed primarily for units rated for up to 17 CFM. It is recommended that when using the AD-9 or AD-9 PG air dryer with a compressor which has a rated displacement exceeding 17 CFM that an authorized Bendix parts outlet or the Bendix Tech Team be contacted for assistance.
	G. Air compressor discharge and/or air dryer inlet temperature too high.	G. Restricted discharge line. *See Appendix A, Table A, columns 1 & 2* of the *Advanced Troubleshooting Guide for Air Brake Compressors (BW1971)* for recommended sizes. If discharge line is restricted or more than 1/16" carbon build-up is found, replace the discharge line. Replace as necessary. Discharge Line Freeze-Up. The discharge line must maintain a constant slope down from the compressor to the air dryer inlet fitting to avoid low points where ice may form and block the flow. If, instead, ice blockages occur at the air dryer inlet, insulation may be added here, or if the inlet fitting is a typical 90° fitting, it may be changed to a straight or 45° fitting. *For more information on how to help prevent discharge line freeze-ups, see Bendix Bulletin TCH-008-021.* Shorter discharge line lengths or insulation may be required in cold climates. Insufficient coolant flow through compressor. Inspect coolant line. Replace as necessary (I.D. is 1/2" min.). Inspect the coolant lines for kinks and restrictions and fittings for restrictions. Replace as necessary. Verify coolant lines go from engine block to compressor and back to the water pump. Repair as necessary. Restricted air inlet (not enough air to compressor). Check compressor air inlet line for restrictions, brittleness, soft or sagging hose conditions, etc. Repair as necessary. Inlet line size is 3/4 I.D. Maximum restriction requirement for compressors is 25 inches of water. Check the engine air filter and service if necessary (if possible, check the air filter usage indicator).

Bendix® AD-9® & AD-9® PG (with PuraGuard® Coalescing Filter) Air Dryer Troubleshooting		
SYMPTOM	**CAUSE**	**REMEDY**
2. Water and/or Oil in Supply or Service Reservoir. (*continued*)	(*Continued*)	Poorly filtered inlet air (poor air quality to compressor). Check for leaking, damaged, or malfunctioning compressor air inlet components (e.g. induction line, fittings, gaskets, filter bodies, etc.). Repair inlet components as needed. Note: Dirt ingestion will damage compressor and is not covered under warranty. If you found excessive oil present in the service reservoir and you did not find any issues above, the compressor may be passing oil. Replace the compressor. If it still under warranty, follow normal warranty process.
	H. Compressor malfunction.	H. If excessive oil is present in the service reservoir and no other issues (from above) were found, the compressor may be passing oil. Test the compressor using the Bendix® BASIC™ cup method as described in the Bendix compressor service manual and referred to in Appendix A, Table A , column 5 of the *Advanced Troubleshooting Guide for Air Brake Compressors (BW1971).* Replace compressor. If still under warranty, follow normal warranty process.
	I. Air by-passes desiccant cartridge assembly.	I. If the vehicle uses a Holset® compressor, inspect the feedback check valve for proper installation and operation. When replacing the desiccant cartridge, make sure the desiccant cartridge assembly is properly installed and the sealing rings are in place on the mounting surface of the desiccant cartridge. 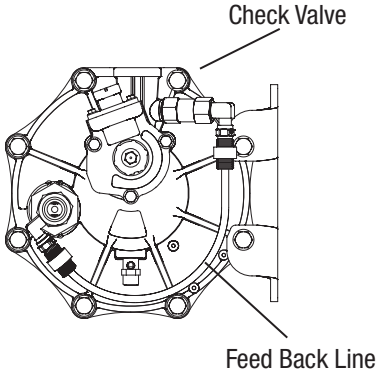 Typical Drop-In Air Dryer End Cover
	J. Desiccant requires replacement.	J. Replace the desiccant cartridge assembly. Refer to Appendix A, Table A columns 3 & 4 of the *Advanced Troubleshooting Guide for Air Brake Compressors (BW1971)* for recommended intervals.
3. Oil present at air dryer purge exhaust or cartridge during maintenance.	A. Air brake charging system is functioning normally.	A. Air dryers remove water and oil from the air brake charging system. A small amount of oil is normal. Check that regular maintenance is being performed and that the amount of oil in the air tanks (reservoirs) is within the acceptable range shown on the BASIC cup (*also see column 5 of Appendix A, Table A* of the *Advanced Troubleshooting Guide for Air Brake Compressors (BW1971)).* Replace the air dryer cartridge as needed and return the vehicle to service.

Bendix® AD-9® & AD-9® PG (with PuraGuard® Coalescing Filter) Air Dryer Troubleshooting		
SYMPTOM	**CAUSE**	**REMEDY**
4. Safety valve on air dryer "popping off" or exhausting air.	A. Restriction between air dryer and supply (first) reservoir.	A. Check to determine if air is reaching supply reservoir. Inspect for kinked tubing or hose. Check for undrilled or restricted hose or tubing fittings and repair or replace as needed.
	B. Air dryer safety valve malfunction.	B. Verify relief pressure is at vehicle or component manufacturer specifications. Replace if malfunctioning.
	C. Desiccant cartridge maintenance required.	C. *Refer to Appendix A ,Table A and column 3 of the Advanced Troubleshooting Guide for Air Brake Compressors (BW1971)*. Check the compressor for excessive oil passing and/or correct the compressor installation. Repair or replace as necessary. Replace the desiccant cartridge.
	D. Malfunctioning discharge check valve in end cover of the Benidix® AD-IP® air dryer.	D. Test to determine if air is passing through the check valve. Repair or replace.
	E. Excessive pressure pulsations from compressor. (Typical single cylinder type).	E. Increase volume in discharge line by increasing length or diameter. Add a ping tank (small reservoir).
	F. Governor malfunction. Missing or restricted governor control line installation.	F. Test governor operation and/or inspect the control line leading from the governor UNL (unloader) port to the air dryer control port.
5. Constant exhaust of air at air dryer purge valve exhaust. (Charge mode.)	A. Air dryer purge valve leaking excessively.	A. With the compressor loaded, apply a soap solution on the purge valve exhaust to test for excessive leakage. *Refer to Technical Bulletin TCH-008-040*. Repair the purge valve as necessary.
	B. Compressor fails to unload (stop compressing air) and air dryer purge exhaust makes "sputtering" or "popping" sound.	B. Confirm failure to unload by increasing & decreasing engine RPM and noting change in the rate of leakage and intensity of accompanying leakage sound. Repair/replace compressor unloaders.
	C. Purge control line connected to the reservoir or the exhaust port of the governor.	C. The purge control line must be connected to the unloader port of the governor.
	D. Purge valve frozen open - malfunctioning heater and thermostat, wiring, or blown fuse.	D. Test the heater and thermostat as described in the Preventive Maintenance Section.
	E. Excessive system leakage.	E. *See Symptom #1*.
	F. Purge valve stays open - supply air leaks to control side.	F. Repair the purge valve and housing.
6. Can not build system air pressure.	A. Inlet and outlet air connections reversed.	A. Connect the compressor discharge to the air dryer supply port. Reconnect the lines properly.
	B. Check valve between air dryer and first reservoir.	B. Test check valve for proper operation. Repair or replace as necessary.
	C. Kinked or blocked (plugged) discharge line.	C. Check to determine if air passes through the discharge line. Check for kinks, bends, excessive carbon deposits, or ice blockage.
	D. Excessive bends in discharge line (water collects and freezes).	D. Discharge line should be constantly sloping from the compressor to the air dryer with as few bends as possible.
	E. *Refer to Symptom 4, Causes E & F.*	E. *Refer to Symptom #4, Remedies E & F.*

Bendix® AD-9® & AD-9® PG (with PuraGuard® Coalescing Filter) Air Dryer Troubleshooting		
SYMPTOM	**CAUSE**	**REMEDY**
7. Air dryer does not purge or exhaust air.	A. Missing, broken, kinked, frozen, plugged, or disconnected purge control line.	A. Inspect the control line from governor UNL (unloader) port to control port of air dryer. Test to determine if air flows through purge control line when compressor is unloaded. Check for undrilled fittings. (*See Symptom #4, Remedy C.*)
	B. Faulty air dryer purge valve.	B. After determining air reaches purge valve (Remedy A above), repair the purge valve.
	C. See Causes, B, E, and G for Symptom #4.	C. Refer to Remedies B, E, and G for Symptom #4.
8. Desiccant material being expelled from the air dryer purge valve exhaust (may look like whitish liquid, paste, or small beads.) - OR - Unsatisfactory desiccant life.	A. This symptom is almost always accompanied by one or more of Symptoms 1, 2, 3, 4, and 5. See related causes for these symptoms above.	A. See Causes and Remedies for Symptoms 1, 2, 3, 4, and 5.
	B. Air dryer not securely mounted. (Excessive vibration.)	B. Vibration should be held to a minimum. Add bracket supports or change the air dryer mounting location if necessary.
	C. Malfunctioning or saturated desiccant cartridge.	C. Replace the desiccant cartridge assembly.
	D. Compressor passing excessive oil.	D. Check for proper compressor installation; if symptoms persist, replace the compressor.
	E. Desiccant cartridge not assembled properly to end cover. (Loose attachment)	E. Check the torque on the desiccant cartridge to the end cover attachment. Refer to assembly section of this data sheet.
9. "Pinging" noise excessive during the compressor loaded cycle.	A. Defective check valve assembly in the air dryer end cover.	A. Refer to Remedy C, Symptom #1.
	B. Leaking turbo cut-off valve.	B. Repair or replace the purge valve assembly.
	C. Leaking purge valve control piston o-ring.	C. Repair or replace the purge valve assembly.
10. Constant seepage of air at the air dryer purge valve exhaust (non-charging mode.)	A. Defective check valve assembly in the air dryer end cover.	A. Refer to Remedy C, Symptom #1.
	B. Leaking turbo cut-off valve.	B. Repair or replace the purge valve assembly
	C. Leaking purge valve control piston o-ring.	C. Repair or replace the purge valve assembly.
11. The air dryer purge piston cycles rapidly in the compressor unloaded (non-compressing) mode.	A. Compressor fails to "unload".	A. Faulty governor installation; no air line from the governor to the compressor or the line is kinked or restricted. Install or repair the air line.

Notes

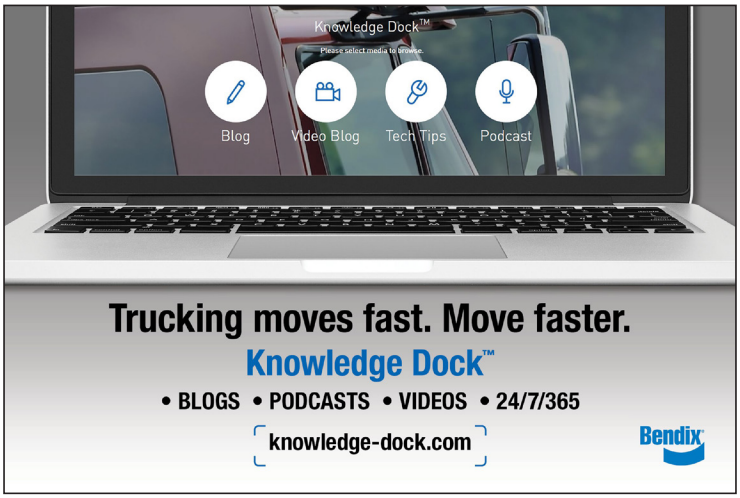

Log-on and Learn from the Best

On-line training that's available when you are —24/7/365.
Visit brake-school.com.

SD-08-2412 Rev. 008 © 2018 Bendix Commercial Vehicle Systems LLC, a member of the Knorr-Bremse Group • 06/18 • All Rights Reserved