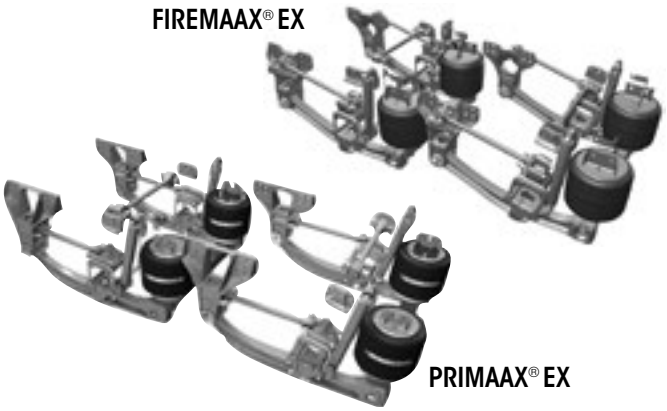

TECHNICAL PROCEDURE

PRIMAAX® EX • FIREMAAX® EX
PRIMAAX® • FIREMAAX® Series
Heavy-duty Rear Air Suspension

SUBJECT: Service Instructions
LIT NO: 17730-238
DATE: March 2018 **REVISION:** F

TABLE OF CONTENTS

Section 1 Introduction 2

Section 2 Product Description 2

Section 3 Important Safety Notice 5

Section 4 Parts Lists 10

Section 5 Special Tools 35

Section 6 Preventive Maintenance

Hendrickson Recommended Inspection Intervals 38
Component Inspection 40
U-bolt locknuts 41
Pivot Bushing and D-Pin Bushing Inspection 42
Longitudinal and Transverse Torque Rods . . 44
Air Fitting Inspection 45
Shock Absorber Inspection 45

Section 7 Alignment & Adjustments

Ride Height 47
Single Height Control Valve 47
Dual Height Control Valves 50
Drive Axle Alignment Inspection. 52
Axle Pinion Angle 53
Axle Lateral Alignment 54
Alignment Adjustment Instructions 54
Pinion Angle Adjustment 58

Section 8 Component Replacement

Fasteners 61
Air Spring 61
Air Spring / Upper Air Spring Bracket 63
Height Control Valve 65
Shock Absorber 66
Transverse Torque Rod 67
Longitudinal Torque Rod 68
Torque Rod Bushing 70
Support Beam Assembly and Cross Tube . . . 72
U-beam Assembly 72
D-pin Bushing 76
QUIK-ALIGN Pivot Bushing 83
Top Pad 88
Bottom Cap and Axle Spacer (if equipped) . 90
S-cam Support Bracket (if equipped) 94
Axle Stops 94
Frame Hanger 95
Aftermarket Dual Height Control Valves 99

Section 9 Plumbing Diagrams 101

Section 10 Torque Specifications 103

Section 11 Troubleshooting Guide 107

HENDRICKSON
The World Rides On Us®

SECTION 1
Introduction

This publication is intended to acquaint and assist maintenance personnel in the preventive maintenance, service, repair, and rebuild of PRIMAAX® EX • FIREMAAX® EX | PRIMAAX® • FIREMAAX® suspension systems.

Refer to Hendrickson website for other vehicle manufacturer specific PRIMAAX EX | PRIMAAX suspension literature:

- Kenworth (17730-263), Volvo (17730-254), Mack (17730-279), International Truck (17730-283), Caterpillar (17730-284) and Freightliner (SP-230)

NOTE Use only Hendrickson Genuine parts for servicing this suspension system.

It is important to read and understand the entire Technical Procedure publication prior to performing any maintenance, service, repair, or rebuild of this product. The information in this publication contains parts lists, safety information, product specifications, features, proper maintenance, service, repair and rebuild instructions for the PRIMAAX EX • FIREMAAX EX | PRIMAAX • FIREMAAX suspensions.

Hendrickson reserves the right to make changes and improvements to its products and publications at any time. Contact Hendrickson Tech Services for information on the latest version of this manual at 1-866-755-5968 (toll-free U.S. and Canada), 630-910-2800 (outside U.S. and Canada) or e-mail: techservices@hendrickson-intl.com.

The latest revision of this publication is also available online at www.hendrickson-intl.com.

SECTION 2
Product Description

PRIMAAX EX

MAAXimize the performance of vocational and heavy-haul vehicles with a suspension engineered specifically for demanding on- and off- road conditions. With over a 100 years of robust suspension design, Hendrickson delivers another premium suspension with PRIMAAX EX. Rugged, dependable and extensively tested in challenging applications, PRIMAAX EX paves a new road for suspension technology. Drivers, cargo and vehicles are major investments that require protection. PRIMAAX EX adjusts to variations in load and road conditions for optimal ride and performance. This low-maintenance design delivers greater stability for improved control on and off the job site.

FIREMAAX EX

The FIREMAAX EX heavy-duty rear air suspension provides a package of benefits previously unavailable in any one emergency vehicle air suspension. Its outstanding ride produces superior driver and passenger comfort while helping to protect critical, life-saving equipment and costly electronic components from excessive vibration and road shock. The suspension geometry and air spring design work together to produce low natural frequencies resulting in a premium ride. FIREMAAX EX provides enhanced stability for demanding fire / rescue vehicle applications, delivering more than twice the roll stiffness compared to other air suspensions.

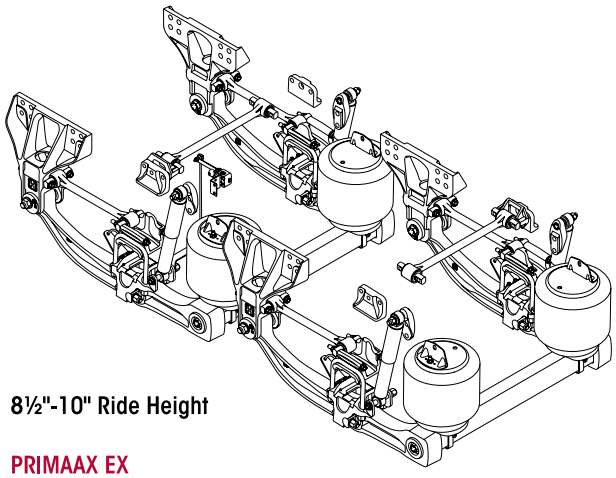

8½"-10" Ride Height

PRIMAAX EX
23K•46K•69K•26K•52K•78K
26K S•52K S•78K S

FIREMAAX EX
24K•48K•27K•54K•27K S•54K S

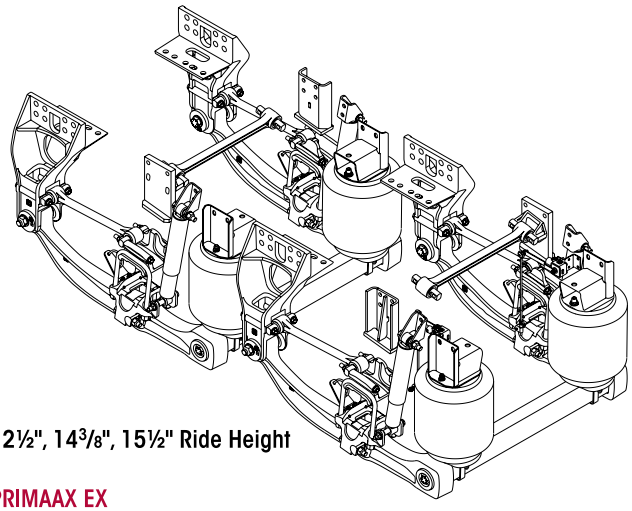

12½", 14⅜", 15½" Ride Height

PRIMAAX EX
23K T•46K T•69K T•26K T•52K T•78K T
26K ST•52K ST•78K ST

FIREMAAX EX
24K T•48K T•27K T•54K T•27K ST•54K ST

Note: S – designates **Small Clamp Group** **T** – designates **Tall Ride Height** 12½" – 14⅜" – 15½"

- **Unique suspension geometry** — Optimized configuration significantly controls suspension windup and corresponding frame rise, while increasing roll stiffness and reducing roll steer.
- **Easy axle alignment** — Hendrickson's proven QUIK-ALIGN® axle alignment system helps save time and money and offers a fast method to ensure proper alignment for improved tire life.
- **D-pin axle connection and clamp group** — Reduces stress input to the axle housing by transferring the torsional loads to the integrated stabilizer system, which helps extend axle and joint service life.
- **Large volume air springs** — Reduce noise, vibration and harshness to cab, chassis and body equipment for reduced total vehicle maintenance; new integrated pistons and spacers provide a more robust beam connection while lifting and supporting the load with less air pressure.
- **Frame Hanger** — New, more robust design to meet a variety of grueling vocational and severe-duty applications.
- **Structural beam end joint** — Maintenance-free connection with cross brace reduces downtime for improved productivity.
- **Cast structural beams** — Redesigned beams utilize premium materials to improve durability mor than 350 percent (based on lab testing).
- **Heavy-duty shock absorbers** — Positioned and tuned for optimum damping characteristics and protect air springs from over-extension.
- **Torque Rods** — Three-rod configuration reduces axle stress, welding and complexity. Optimized configuration helps improve handling and roll stiffness for expanded applications. Premium retained rubber bushings for increased service life and resistance to walkout. Designed for optimum clearance and articulation. Alternative rods available for disc brake use.

PRIMAAX EX SPECIFICATIONS

Suspension Rating	23,000 lbs.	26,000 lbs.	46,000 lbs.	52,000 lbs.	69,000 lbs.	78,000 lbs.
Installed Weight[1]	542 lbs.	651 lbs.	1,078 lbs.	1,292 lbs.	1,629 lbs.	1,931 lbs.
Axle Configuration	Single	Single	Tandem	Tandem	Tandem	Tridem
Gross Combination Weight Approval[2]	95,000 lbs.	142,000 lbs.	190,000 lbs.	245,000 lbs.	See Axle Manufacturer Recommendation	
Site Travel Rating[3]	30,000 lbs.	33,000 lbs.	60,000 lbs.	66,000 lbs.	90,000 lbs.	99,000 lbs.
Axle Travel[4]	8"	8"	8"	8"	8"	8.5"
Ground Clearance	10.75"	10.5"	10.75"	10.5"	10.75"	10.5"
Lift Axles	Approved	Approved	Approved	Approved	Approved	Approved
Ride Heights[5]	8.5" –10.5" 12.5" –15.5"	8.5" –10.5" 12.5" –15.5"	8.5" –10.5" 12.5" –15.5"	8.5" –10.5" 12.5" –15.5"	8.5" –10.5" 12.5" –15.5"	8.5" –10.5" 12.5" –15.5"
Axle Spacing	N/A	N/A	52"- 72.5"	52"- 72.5"	52"- 60"	54"- 60"

- PRIMAAX EX is approved for vocational and heavy-haul vehicle applications including, but not limited to: truck, tractor, dump, front and rear discharge mixers, logging, crane mounted, platform, fire / rescue, specialty and vehicles equipped with outriggers. Some vehicle configurations, such as vehicles equipped with outriggers, may require alternate suspension air valving. All applications must comply with applicable Hendrickson specifications and must also be approved by the respective vehicle manufacturer with the vehicle in its original, as-built configuration. Contact Hendrickson and the respective vehicle manufacturer for approval of additional applications.

1. Installed weight includes complete suspension, torque rods, axle and frame brackets and all hardware. Published weight is for standard PRIMAAX EX suspension using 10 inch ride height. Other configurations may change weight.
2. Contact Hendrickson for applications that may exceed Gross Vehicle Weight / Gross Combination weight approval ratings.
3. Site travel rating — operators using vehicles equipped with liftable pusher or tag axles must not exceed published ratings. Ratings are limited to no more than five percent of vehicle operation at a speed not to exceed five mph. Liftable pusher or tag axles should be raised (or unloaded) to improve vehicle maneuverability in off-road use or when vehicle is empty. Site travel ratings are consistent with published axle manufacturer's limitations. Axle and suspension site travel specifications must not be exceeded.
4. Suspension articulation may exceed vehicle's capability and may be limited by vehicle manufacturer; vehicle manufacturer installed axle stop may restrict suspensions articulation.
5. Contact Hendrickson for availability of beam lengths.
6. Shock absorbers are required in tractor and logging applications. Ride and traction may be improved in other applications with shock absorbers. Ride performance can be subjective and may be dependent on many factors beyond the suspension design, such as cab suspension, road conditions, body / auxiliary equipment, frame specifications, etc. Contact Hendrickson or your truck manufacturer / dealer for further information.

FIREMAAX EX SPECIFICATIONS

Rating	24,000 lbs.	27,000 lbs.	31,000 lbs.	48,000 lbs.	54,000 lbs.	62,000 lbs.
Installed Weight[1]	550 lbs.	658 lbs.	665 lbs.	1,090 lbs.	1,305 lbs.	1320 lbs.
Axle Configuration	Single	Single	Single	Tandem	Tandem	Tandem
Axle Travel[2]	8"	8"	8"	8"	8"	8"
Ground Clearance[3]	10.75"	10.5"	10.5"	10.75"	10.5"	10.5"
Ride Heights[4]	8.5" to 15.5"	8.5" to 12.5"	8.5",10",13"	8.5" to 15.5"	8.5" to 12.5"	8.5",10",13"
Engine Torque Restrictions	None	None	None	None	None	None
Axle Spacing	N/A	N/A	N/A	52"- 72.5"	54"- 72.5"	54"- 72.5"
Disc Brake Compatibility	Yes	Yes	No	Yes	Yes	No

- FIREMAAX EX capacity ratings apply to fire and rescue market only.
- FIREMAAX EX may be referred to as PRIMAAX EX by some OEMs.
- All application must comply with applicable Hendrickson specifications and must also be approved by the respective vehicle manufacturer with the vehicle in its original, as-built configuration. Contact Hendrickson and the respective vehicle manufacturer for approval of additional applications.

1. Installed weight includes complete suspension, torque rods, axle and frame brackets and all hardware. Published weight is based on a standard FIREMAAX EX suspension compatible with drum breaks using 10 inch ride height. Other configurations may vary.
2. Axle travel may be limited by vehicle manufacturer, axle stop settings and shock stroke may restrict suspension's articulation. Varying ride heights and configurations may restrict travel
3. Ground clearance is based on a standard FIREMAAX EX suspension with 11R22.5 tire size.
4. For different ride height options, please contact Hendrickson, or your truck manufacturer or your dealer.

SECTION 3

Important Safety Notice

Proper maintenance, service and repair are important to the reliable operation of the suspension. The procedures recommended by Hendrickson and described in this technical publication are methods of performing such maintenance, service and repair.

This technical publication should be read carefully to help prevent personal injury and to assure that proper methods are used. Improper maintenance, service or repair may damage the vehicle, cause personal injury, render the vehicle unsafe in operation, or void the manufacturer's warranty.

Failure to follow the safety precautions in this manual can result in personal injury and/or property damage. Carefully read and understand all safety related information within this publication, on all decals and in all such materials provided by the vehicle manufacturer before conducting any maintenance, service or repair.

EXPLANATION OF SIGNAL WORDS

Hazard "Signal Words" (Danger • Warning • Caution) appear in various locations throughout this publication. Information accented by one of these signal words must be observed to help minimize the risk of personal injury to service personnel, or possibility of improper service methods which may damage the vehicle or render it unsafe.

This is the safety alert symbol. It is used to alert you to potential personal injury hazards. Obey all safety messages that follow this symbol to avoid possible injury or death.

Additional Notes or Service Hints are utilized to emphasize areas of procedural importance and provide suggestions for ease of repair. The following definitions indicate the use of these signal words as they appear throughout the publication.

DANGER — INDICATES AN IMMINENTLY HAZARDOUS SITUATION, WHICH IF NOT AVOIDED, WILL RESULT IN SERIOUS INJURY OR DEATH.

WARNING — INDICATES A POTENTIAL HAZARDOUS SITUATION WHICH, IF NOT AVOIDED, CAN RESULT IN SERIOUS INJURY OR DEATH.

CAUTION — INDICATES A POTENTIAL HAZARDOUS SITUATION WHICH, IF NOT AVOIDED, MAY RESULT IN MINOR OR MODERATE INJURY.

NOTE — An operating procedure, practice condition, etc. which is essential to emphasize.

SERVICE HINT — A helpful suggestion that will make the servicing being performed a little easier and/or faster.

Also note that particular service operations may require the use of special tools designed for specific purposes. These special tools can be found in the "Special Tools" Section of this publication.

The torque symbol alerts you to tighten fasteners to a specified torque value. Refer to Torque Specifications Section of this publication.

SAFETY PRECAUTIONS

WARNING

LOAD CAPACITY

ADHERE TO THE PUBLISHED CAPACITY RATINGS FOR THE SUSPENSION. ADD-ON AXLE ATTACHMENTS AND OTHER LOAD TRANSFERRING DEVICES, SUCH AS LIFTABLE AXLES, CAN INCREASE THE SUSPENSION LOAD ABOVE ITS RATED AND APPROVED CAPACITIES, WHICH CAN RESULT IN COMPONENT DAMAGE AND ADVERSE VEHICLE HANDLING, POSSIBLY CAUSING PERSONAL INJURY OR PROPERTY DAMAGE.

WARNING

FASTENERS

DISCARD USED FASTENERS. ALWAYS USE NEW FASTENERS TO COMPLETE A REPAIR. FAILURE TO DO SO COULD RESULT IN FAILURE OF THE PART, OR MATING COMPONENTS, ADVERSE VEHICLE HANDLING, PERSONAL INJURY, OR PROPERTY DAMAGE.

LOOSE OR OVER TORQUED FASTENERS CAN CAUSE COMPONENT DAMAGE, ADVERSE VEHICLE HANDLING, PROPERTY DAMAGE, OR SEVERE PERSONAL INJURY. MAINTAIN CORRECT TORQUE VALUE AT ALL TIMES. CHECK TORQUE VALUES ON A REGULAR BASIS AS SPECIFIED, USING A REGULARLY CALIBRATED TORQUE WRENCH. TORQUE VALUES SPECIFIED IN THIS TECHNICAL PUBLICATION ARE FOR HENDRICKSON SUPPLIED FASTENERS ONLY. IF NON HENDRICKSON FASTENERS ARE USED, FOLLOW TORQUE SPECIFICATION LISTED IN THE VEHICLE MANUFACTURER'S SERVICE MANUAL.

WARNING

QUIK-ALIGN FASTENERS

DISCARD USED QUIK-ALIGN FASTENERS. ALWAYS USE NEW QUIK-ALIGN FASTENERS TO COMPLETE A REPAIR. FAILURE TO DO SO COULD RESULT IN FAILURE OF THE PART, OR MATING COMPONENTS, ADVERSE VEHICLE HANDLING, PERSONAL INJURY, OR PROPERTY DAMAGE.

DO NOT ASSEMBLE QUIK-ALIGN JOINT WITHOUT THE PROPER FASTENERS. USE ONLY H-COATED FASTENERS TO SUSTAIN PROPER CLAMP FORCE. FAILURE TO DO SO CAN CAUSE ADVERSE VEHICLE HANDLING, PROPERTY DAMAGE OR PERSONAL INJURY AND VOID WARRANTY. ENSURE THAT THE QUIK-ALIGN FASTENER'S TORQUE VALUES ARE SUSTAINED AS RECOMMENDED IN THE TORQUE SPECIFICATIONS SECTION OF THIS PUBLICATION. FAILURE TO DO SO CAN CAUSE ADVERSE VEHICLE HANDLING RESULTING IN PERSONAL INJURY OR PROPERTY DAMAGE. FOLLOW VEHICLE MANUFACTURER'S FASTENER ORIENTATION WHEN PERFORMING ANY MAINTENANCE, SERVICE OR REPAIR.

WARNING

MODIFYING COMPONENTS

DO NOT MODIFY OR REWORK PARTS WITHOUT AUTHORIZATION FROM HENDRICKSON. DO NOT SUBSTITUTE REPLACEMENT COMPONENTS NOT AUTHORIZED BY HENDRICKSON. USE OF MODIFIED, REWORKED, SUBSTITUTE OR REPLACEMENT PARTS NOT AUTHORIZED BY HENDRICKSON MAY NOT MEET HENDRICKSON'S SPECIFICATIONS, AND CAN RESULT IN FAILURE OF THE PART, ADVERSE VEHICLE HANDLING, POSSIBLE PERSONAL INJURY OR PROPERTY DAMAGE, AND WILL VOID ANY APPLICABLE WARRANTIES. USE ONLY HENDRICKSON AUTHORIZED REPLACEMENT PARTS.

CAUTION

PROCEDURES AND TOOLS

A TECHNICIAN USING A SERVICE PROCEDURE OR TOOL WHICH HAS NOT BEEN RECOMMENDED BY HENDRICKSON MUST FIRST SATISFY HIMSELF THAT NEITHER HIS SAFETY NOR THE VEHICLE'S SAFETY WILL BE JEOPARDIZED BY THE METHOD OR TOOL SELECTED. INDIVIDUALS DEVIATING IN ANY MANNER FROM THE INSTRUCTIONS PROVIDED WILL ASSUME ALL RISKS OF CONSEQUENTIAL PERSONAL INJURY OR DAMAGE TO EQUIPMENT INVOLVED.

WARNING

TORCH/WELDING

DO NOT USE A CUTTING TORCH TO REMOVE ANY FASTENERS. THE USE OF HEAT ON SUSPENSION COMPONENTS WILL ADVERSELY AFFECT THE STRENGTH OF THESE PARTS. A COMPONENT DAMAGED IN THIS MANNER CAN RESULT IN THE ADVERSE VEHICLE HANDLING AND POSSIBLE PERSONAL INJURY OR PROPERTY DAMAGE.

EXERCISE EXTREME CARE WHEN HANDLING OR PERFORMING MAINTENANCE IN THE AREA OF THE SUPPORT BEAM. DO NOT CONNECT ARC WELDING GROUND LINE TO THE SUPPORT BEAM. DO NOT STRIKE AN ARC WITH THE ELECTRODE ON THE SUPPORT BEAM. DO NOT USE HEAT NEAR THE SUPPORT BEAM ASSEMBLY. DO NOT NICK OR GOUGE THE SUPPORT BEAM. SUCH IMPROPER ACTIONS CAN DAMAGE THE SUPPORT BEAM ASSEMBLY AND CAUSE ADVERSE VEHICLE HANDLING AND POSSIBLE PERSONAL INJURY OR PROPERTY DAMAGE.

WARNING

WORK SITE DUMPING

WHEN THE TRUCK/TRAILER BODY/BOOM/AND OR ATTACHMENT IS LIFTED IT IS MANDATORY TO COMPLETELY EXHAUST THE AIR FROM THE SUSPENSION SYSTEM TO HELP PROVIDE STABILITY WHEN LIFTED. FAILURE TO DO SO CAN RESULT IN LOSS OF VEHICLE CONTROL, ROLL-OVER, OR VEHICLE INSTABILITY, POSSIBLY CAUSING SEVERE PERSONAL INJURY, PROPERTY DAMAGE, OR DEATH. FIRST RAISE ANY AUXILIARY AXLES AND THEN EXHAUST ALL PRESSURE FROM REAR TRACTOR / TRAILER AND TRUCK AIR SUSPENSION SYSTEMS PRIOR TO RAISING THE BODY / BOOM OR ATTACHMENTS. FOLLOW THE VEHICLE MANUFACTURER'S OPERATING INSTRUCTIONS FOR MAINTAINING PROPER STABILITY.

WARNING

SHOCK ABSORBERS

THE SHOCK ABSORBERS ARE THE REBOUND TRAVEL STOPS FOR THE SUSPENSION. ANYTIME THE AXLE ON A PRIMAAX EX • FIREMAAX EX | PRIMAAX • FIREMAAX SUSPENSION IS SUSPENDED IT IS MANDATORY THAT THE SHOCK ABSORBERS REMAIN CONNECTED. FAILURE TO DO SO CAN CAUSE THE AIR SPRINGS TO SEPARATE FROM THE PISTON AND RESULT IN PREMATURE AIR SPRING FAILURE. REPLACEMENT OF SHOCK ABSORBERS WITH NON-HENDRICKSON PARTS CAN ALTER THE REBOUND TRAVEL OF THE SUSPENSION.

WARNING

TRANSVERSE RODS

PRIMAAX EX • FIREMAAX EX | PRIMAAX • FIREMAAX SUSPENSIONS INCORPORATE TRANSVERSE RODS FOR VEHICLE STABILITY. IF THESE COMPONENTS ARE DISCONNECTED OR ARE NON-FUNCTIONAL, THE VEHICLE SHOULD NOT BE OPERATED. FAILURE TO DO SO CAN RESULT IN ADVERSE VEHICLE HANDLING, POSSIBLE TIRE CONTACT WITH THE FRAME, PREMATURE COMPONENT DAMAGE, OR SEVERE PERSONAL INJURY.

WARNING

SUPPORT THE VEHICLE PRIOR TO SERVICING

PLACE THE VEHICLE ON A LEVEL FLOOR AND CHOCK THE WHEELS TO PREVENT THE VEHICLE FROM MOVING OR ROLLING. DO NOT WORK AROUND OR UNDER A RAISED VEHICLE SUPPORTED BY ONLY A FLOOR JACK OR OTHER LIFTING DEVICE. ALWAYS SUPPORT A RAISED VEHICLE WITH RIGID SAFETY STANDS. FAILURE TO DO SO CAN CAUSE SERIOUS PERSONAL INJURY OR DAMAGE TO EQUIPMENT.

WARNING

PERSONAL PROTECTIVE EQUIPMENT

ALWAYS WEAR PROPER EYE PROTECTION AND OTHER REQUIRED PERSONAL PROTECTIVE EQUIPMENT TO HELP PREVENT PERSONAL INJURY WHEN PERFORMING VEHICLE MAINTENANCE, REPAIR OR SERVICE.

WARNING

PARTS CLEANING

SOLVENT CLEANERS CAN BE FLAMMABLE, POISONOUS, AND CAUSE BURNS. TO HELP AVOID SERIOUS PERSONAL INJURY, CAREFULLY FOLLOW THE MANUFACTURER'S PRODUCT INSTRUCTIONS AND GUIDELINES AND THE FOLLOWING PROCEDURES:

1. WEAR PROPER EYE PROTECTION.
2. WEAR CLOTHING THAT PROTECTS YOUR SKIN.
3. WORK IN A WELL-VENTILATED AREA.
4. DO NOT USE GASOLINE OR SOLVENTS THAT CONTAIN GASOLINE. GASOLINE CAN EXPLODE.
5. HOT SOLUTION TANKS OR ALKALINE SOLUTIONS MUST BE USED CORRECTLY. FOLLOW THE MANUFACTURER'S RECOMMENDED INSTRUCTIONS AND GUIDELINES CAREFULLY TO HELP PREVENT PERSONAL ACCIDENT OR INJURY.

DO NOT USE HOT SOLUTION TANKS OR WATER AND ALKALINE SOLUTIONS TO CLEAN GROUND OR POLISHED PARTS. DOING SO WILL CAUSE DAMAGE TO THE PARTS AND VOID WARRANTY.

CAUTION

AIR SPRING LOWER MOUNTING STUDS

IF THE AIR SPRING IS BEING REMOVED FOR AN ALTERNATE REPAIR, IT IS MANDATORY TO LUBRICATE THE LOWER AIR SPRING FASTENERS WITH PENETRATING OIL AND REMOVE WITH HAND TOOLS TO PREVENT DAMAGE TO THE LOWER AIR SPRING MOUNTING STUD. FAILURE TO DO SO CAN CAUSE COMPONENT DAMAGE AND VOID WARRANTY.

WARNING

AIR SPRING PRESSURE RETENTION

SOME VEHICLE APPLICATIONS, SUCH AS VEHICLES EQUIPPED WITH OUTRIGGERS, RETAIN SOME AIR PRESSURE IN THE AIR SPRINGS AT ALL TIMES. PRIOR TO PERFORMING ANY MAINTENANCE, SERVICE, OR REPAIR OF THE SUSPENSION, VERIFY EACH AIR SPRING IS COMPLETELY DEFLATED. FAILURE TO DO SO COULD RESULT SERIOUS PROPERTY DAMAGE AND/OR SEVERE PERSONAL INJURY.

WARNING

FAILURE TO PRESS THE AIR SPRING AGAINST THE UNDERSIDE OF THE FRAME WHILE TIGHTENING THE UPPER AIR SPRING BRACKET CAN RESULT IN COMPONENT DAMAGE AND PERSONAL INJURY OR PROPERTY DAMAGE.

WARNING

AIR SPRING INFLATION AND DEFLATION

PRIOR TO DISASSEMBLY OF THE SUSPENSION, AIR SPRING ASSEMBLIES MUST BE DEFLATED. UNRESTRICTED AIR SPRING ASSEMBLIES CAN VIOLENTLY SHIFT. DO NOT INFLATE AIR SPRING ASSEMBLIES WHEN THEY ARE UNRESTRICTED. AIR SPRING ASSEMBLIES MUST BE RESTRICTED BY SUSPENSION OR OTHER ADEQUATE STRUCTURE. DO NOT INFLATE BEYOND PRESSURES RECOMMENDED BY AIR SPRING MANUFACTURER, CONTACT HENDRICKSON TECHNICAL SERVICES FOR DETAILS. IMPROPER USE OR OVER INFLATION MAY CAUSE AIR SPRING ASSEMBLIES TO BURST, CAUSING PROPERTY DAMAGE AND/OR SEVERE PERSONAL INJURY.

PRIOR TO AND DURING DEFLATION AND INFLATION OF THE AIR SUSPENSION SYSTEM, ENSURE ALL PERSONNEL AND EQUIPMENT ARE CLEAR FROM UNDER THE VEHICLE AND AROUND THE SERVICE AREA, FAILURE TO DO SO CAN CAUSE SERIOUS PERSONAL INJURY, DEATH, OR PROPERTY DAMAGE.

CAUTION

AIR SPRING INFLATION

INFLATE THE SUSPENSION SLOWLY AND MAKE SURE THE RUBBER BLADDER OF THE AIR SPRING INFLATES UNIFORMLY AND IS NOT BINDING. FAILURE TO DO SO CAN CAUSE DAMAGE TO THE AIR SPRING AND/OR MOUNTING BRACKETS AND VOID WARRANTY.

FIGURE 3-1

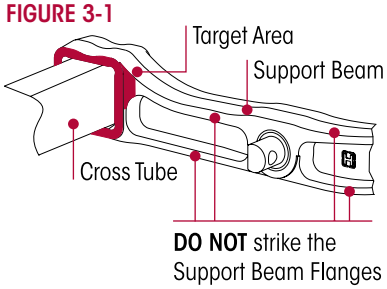

WARNING

CROSS TUBE, SUPPORT BEAM AND U-BEAM ASSEMBLY

WHEN SEPARATING THE U-BEAM ASSEMBLY, PROTECT THE CROSS TUBE BY PLACING A PIECE OF PLYWOOD AGAINST CROSS TUBE OR CARDBOARD AROUND THE CROSS TUBE. CAREFULLY DISLODGE THE CROSS TUBE FROM THE SUPPORT BEAM WITH A LONG HANDLED SLEDGE HAMMER BY APPLYING BLUNT FORCE ON THE SUPPORT BEAM DIRECTLY IN FRONT OF THE INBOARD TOP CORNER JOINT. ALL BLUNT FORCE MUST BE APPLIED FLUSH TO THE THICKEST PART OF THE SUPPORT BEAM. FAILURE TO STRIKE THE SUPPORT BEAM SQUARELY MAY RESULT IN COMPONENT DAMAGE, PREMATURE FAILURE AND VOID WARRANTY, SEE FIGURE 3-1.

WARNING

CROSS TUBE

IMPROPER JACKING METHODS CAN CAUSE STRUCTURAL DAMAGE (SEE SAFETY DECAL, FIGURE 3-2) AND RESULT IN ADVERSE VEHICLE HANDLING, SEVERE PERSONAL INJURY OR DEATH AND WILL VOID HENDRICKSON'S WARRANTY.

FIGURE 3-2 Safety Decal Number 60905-015

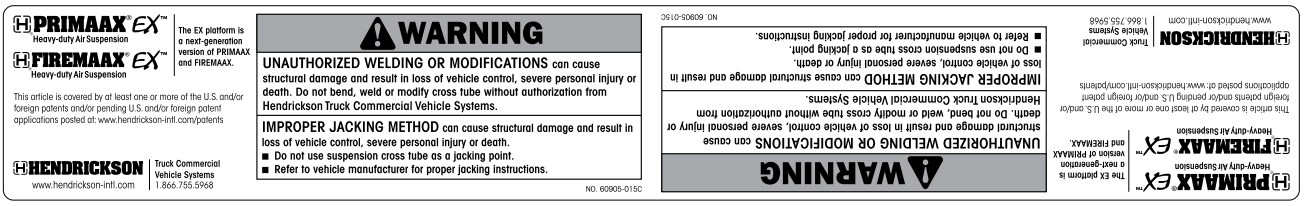

- REPLACE ANY SAFETY DECALS THAT ARE FADED, TORN, MISSING, ILLEGIBLE, OR OTHERWISE DAMAGED. CONTACT HENDRICKSON TO ORDER REPLACEMENT LABELS
- DO NOT USE THE SUSPENSION CROSS TUBE AS A JACKING POINT TO RAISE THE VEHICLE, SEE FIGURE 3-3
- REFER TO VEHICLE MANUFACTURER FOR PROPER JACKING INSTRUCTIONS, SEE FIGURE 3-4

FIGURE 3-3

FIGURE 3-4

SECTION 4
Parts Lists

Technical Notes

The following information is intended to assist in determining which suspension is equipped on the vehicle. As an example, in Figure 5-1, the end cap / frame hanger help identify whether the suspension is the current model PRIMAAX EX or the previous production model PRIMAAX (out of production since May 2010).

OEM Specific PRIMAAX EX Parts lists — Caterpillar (SP-234) • Freightliner (SP-230)• International Truck (SP-233) • Kenworth (SP-225) • Mack (SP-231) and Volvo (SP-226) are available online at www.hendrickson-intl.com.

FIGURE 5-1 — PRIMAAX EX • FIREMAAX EX or PRIMAAX • FIREMAAX

PRIMAAX EX
FIREMAAX EX
Enhanced U-beam Assembly with Integrated End Cap

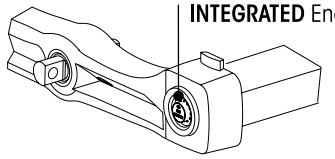

PRIMAAX
FIREMAAX
Support Beam with Detachable End Cap
Out of Production May 2010

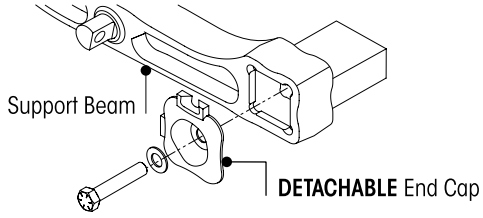

FIGURE 5-2 — SUSPENSION RATING • CAPACITY

S – designates Small Clamp Group • **T** – designates Tall Ride Height 12½" – 14⅜" – 15½"

SMALL CLAMP GROUP

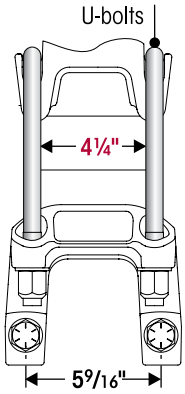

Suspension Model:
PRIMAAX EX
23K•46K•69K|23KT•46KT•69KT
26K S•52K S•78K S|26K ST•52K ST•78K ST
FIREMAAX EX
24K•48K|24KT•48KT
27K S•54K S|27K ST•54K ST

PRIMAAX
230•460•690|230T•460T•690T
FIREMAAX
240•480|240T•480T

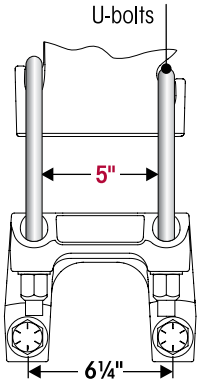

Suspension Model:
PRIMAAX EX
26K•52K•78K|26KT•52KT•78KT
FIREMAAX EX
27K•31K•54K•62K
27KT•31KT•54KT•62KT

PRIMAAX
260•520•780|260T•520T•780T
FIREMAAX
270•540|270T•540T

FIGURE 5-3 — RIDE HEIGHT

Frame Hangers: 8½"-10" Ride Height

PRIMAAX EX
FIREMAAX EX

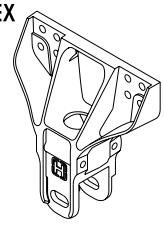

PRIMAAX EX
FIREMAAX EX
with Disc Brakes

PRIMAAX
FIREMAAX

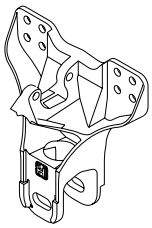

TALL RIDE HEIGHT

Frame Hangers: 12½"-15½" Ride Height

PRIMAAX EX
FIREMAAX EX

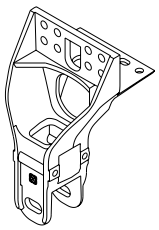

PRIMAAX EX
FIREMAAX EX
with Disc Brakes

PRIMAAX
FIREMAAX

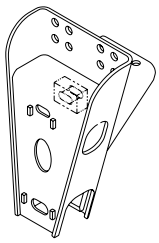

FIGURE 5-4 — AXLE SPACER

Ride Height with Axle Spacer
8½", 12½"

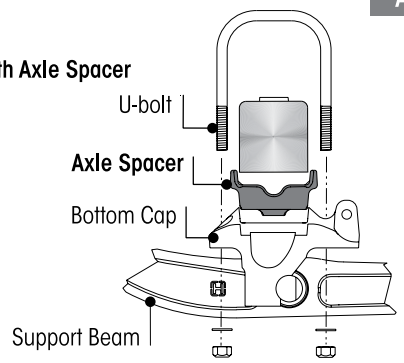

Ride Height without Axle Spacer
10", 14⅜", 15½"

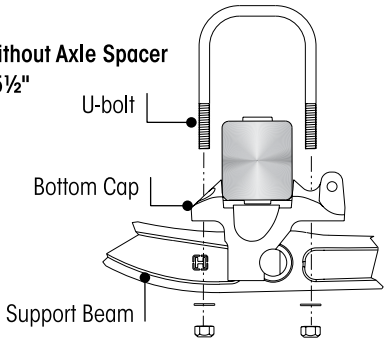

Bottom Cap and Longitudinal Torque Rod Assembly

BOTTOM CAP

- **8½",12½", 14⅜", 15½" Ride Heights**
  Locate the part number stamped on the bottom cap 60556-XXX

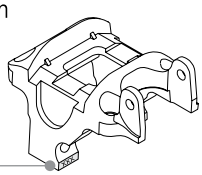

- **10" Ride Height** See tables below

LONGITUDINAL TORQUE ROD ASSEMBLY

PRIMAAX EX 23K • 46K • 69K | 23KT • 46KT • 69KT
26K S • 52K S •78K S | 26K ST • 52K ST •78K ST
FIREMAAX EX 24K • 48K | 24KT • 48KT
27K S • 54K S | 27K ST • 54K ST

PRIMAAX 230•460•690
230T•460T•690T
FIREMAAX 240•480
240T•480T

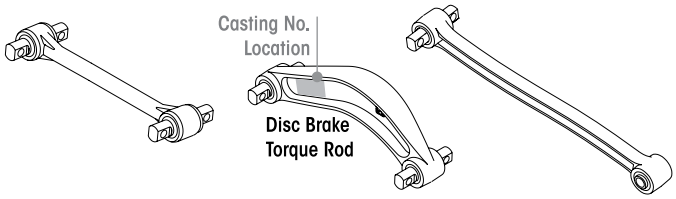

	PRIMAAX EX		FIREMAAX EX	
Page 16	23K•46K•69K 26K S•52K S•78K S		24K•48K 27K S • 54K S	
Page 18	23KT•46KT•69KT 26K ST•52K ST•78K ST		24KT•48KT 27K ST • 54K ST	
D-pin Bolt Length	Pinion Angle	10" RIDE HEIGHT Bottom Cap Part No.	♦Longitudinal Torque Rod Assembly Part No.	
			DRUM BRAKE	DISC BRAKE ♦♦♦
			LEFT FRONT	RIGHT FRONT
5"	1.5	60556-035	67428-425	
	2.0	60556-040		
	2.5	60556-025	67428-435	67219-435 or 68801-101
	3.0	60556-030		
	3.5	60556-035		
	4.0	60556-040		
5¼"	4.5	60556-045		
5½"	5.0	60556-050		
	5.5	60556-055		
	6.0	60556-060		
	6.5	60556-065		
			REAR	
5"	7.0	60556-110	67428-450	67219-435 or 68801-101 Plus Pinion Spacer Part No. 67045-071
	7.5	60556-115		
	8.0	60556-120		
5¼"	8.5	60556-125	67428-460	67219-435 or 68801-101 Plus Pinion Spacer Part No. 67045-069
	9.0	60556-130		
5½"	9.5	60556-135		
4¾"	10.0	60556-100	67428-475	67219-475 or 68801-201
	10.5	60556-105		
5"	11.0	60556-110		
	11.5	60556-115		
	12.0	60556-120		
5¼"	12.5	60556-125		
	13.0	60556-130		
5½"	13.5	60556-135		
	14.0	60556-140		
♦♦5¾"	14.5	60556-145		

♦ Non-serviceable torque rod bushings, requires replacement of complete torque rod assembly with bushings.
♦♦ May replace with 5½" bolts.
♦♦♦ See casting number to confirm

	PRIMAAX	FIREMAAX
Page 28	230•460•690	240•480
Page 30	230T•460T•690T	240T•480T
Pinion Angle	10" RIDE HEIGHT Bottom Cap Part No.	Longitudinal Torque Rod Assembly Part No.
		LEFT FRONT / RIGHT FRONT
2.5	60556-025	60827-605A / 60827-605B
3.0	60556-030	
3.5	60556-035	
4.0	60556-040	
4.5	60556-045	
5.0	60556-050	
5.5	60556-055	
6.0	60556-060	
6.5	60556-065	
		LEFT REAR / RIGHT REAR
7.0	60556-110	64717-620A / 64717-620B
7.5	60556-115	
8.0	60556-120	
8.5	60556-125	
9.0	60556-130	
9.5	60556-135	
10.0	60556-100	60827-645A / 60827-645B
10.5	60556-105	
11.0	60556-110	
11.5	60556-115	
12.0	60556-120	
12.5	60556-125	
13.0	60556-130	
13.5	60556-135	
14.0	60556-140	
14.5	60556-145	

Top Pad • Bottom Cap • Axle Spacer

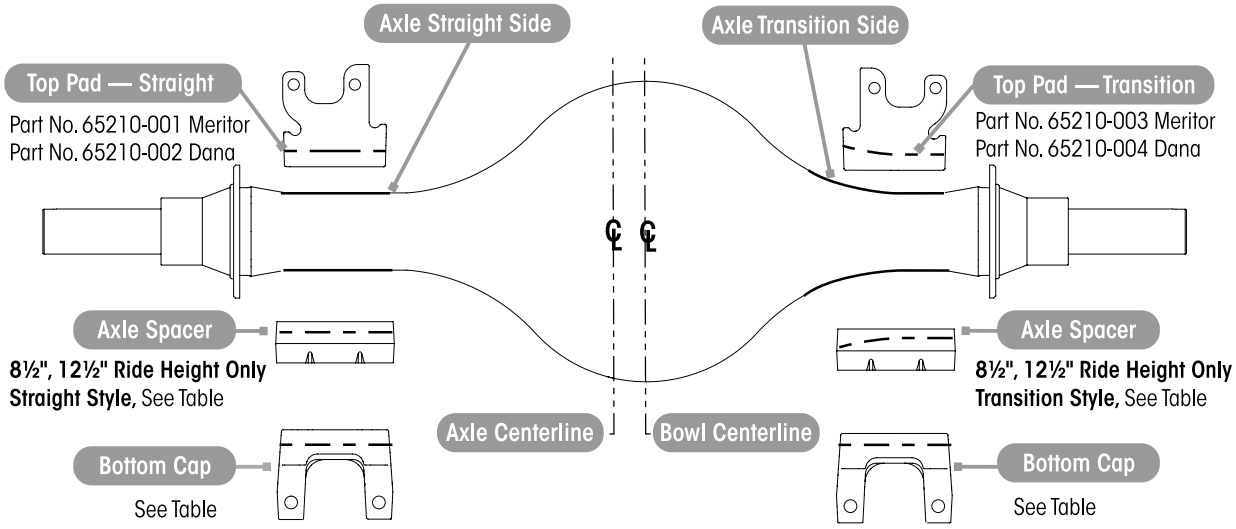

Page 20 Page 22 Page 32	PRIMAAX EX 26K • 52K • 78K PRIMAAX EX 26KT • 52KT • 78KT PRIMAAX 260 • 520 • 780	FIREMAAX EX 27K • 31K • 54K • 62K FIREMAAX EX 27KT • 31KT • 54KT • 62KT FIREMAAX 270 • 540

Key No. 12	BOTTOM CAP PART NUMBER										
Axle Manufacturer	Beam Centers	TANDEM						SINGLE			
		Straight Side		Transition Side				Straight Side	Transition Side		
		8½",12½", 10",14⅜",15½" Ride Height		8½",12½" Ride Height		10",14⅜",15½" Ride Height		8½",12½", 10",14⅜",15½" Ride Height	8½",12½" Ride Height	10",14⅜",15½" Ride Height	
		FRONT	REAR	FRONT	REAR	FRONT	REAR				
MERITOR	40.0"	65208-101	65208-103	65208-101	65208-103	65208-106	65208-109	65208-101	65208-101	65208-105	
	40.5"					67913-006	67913-009			67913-005	
	40.8"					67913-106	67913-109			67913-105	
DANA	40.0"	65208-102	65208-104	65208-102	65208-104	65208-108	65208-111	65208-102	65208-102	65208-107	
	40.5"					67913-008	67913-011			67913-007	
	40.8"					67913-108	67913-111			67913-107	

Key No. 13	AXLE SPACER PART NUMBER										
Axle Manufacturer	Beam Centers	8½",12½" Ride Height		8½",12½" Ride Height		10",14⅜",15½" Ride Height		8½",12½" Ride Height	8½",12½" Ride Height	10",14⅜",15½" Ride Height	
		FRONT	REAR	FRONT	REAR	FRONT	REAR				
MERITOR	40.0"	65276-000		65277-000		Not equipped		65276-000	65277-000	Not equipped	
	40.5"			67973-004					67973-004		
	40.8"			67973-008					67973-008		
DANA	40.0"	65274-000		65275-000				65274-000	65275-000		
	40.5"			67973-002					67973-002		
	40.8"			67973-006					67973-006		

Longitudinal Torque Rod Assembly

- **8½",10" Ride Heights** – See table below
- **All Other Ride Heights** – See specific parts list in this publication

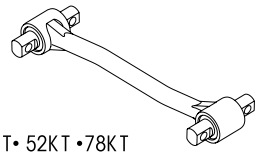

PRIMAAX EX
26K • 52K • 78K | 26KT• 52KT •78KT
FIREMAAX EX
27K • 31K • 54K • 62K | 27KT • 31KT• 54KT• 62KT

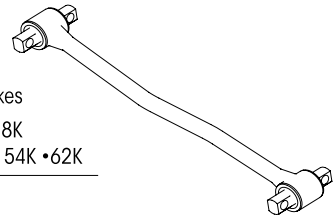

Equipped with Air Disc Brakes
PRIMAAX EX 26K • 52K •78K
FIREMAAX EX 27K • 31K • 54K •62K

PRIMAAX 260•520•780
FIREMAAX 270•540

Page 20 Page 22	PRIMAAX EX 26K • 52K • 78K 26KT • 52KT • 78KT	FIREMAAX EX 27K • 31K • 54K • 62K 27KT • 31KT • 54 KT • 62KT
PINION ANGLE	♦LONGITUDINAL TORQUE ROD ASSEMBLY PART NO.	
	LEFT	RIGHT
1.0–2.0	65302-455A	65302-455B
2.5–3.0	65302-470A	65302-470B
3.5–4.0	65302-475A	65302-475B
9.0–9.5	65302-510A	65302-510B
10.0–10.5	65302-515A	65302-515B
11.0–11.5	65302-520A	65302-520B

♦ Non-serviceable torque rod bushings, requires replacement of complete torque rod assembly with bushings.

Page 20 Page 32	PRIMAAX EX 26K • 52K • 78K PRIMAAX 260 • 520 • 780	FIREMAAX EX 27K • 31K • 54K • 62K FIREMAAX 270 • 540
PINION ANGLE	LONGITUDINAL TORQUE ROD ASSEMBLY PART NO.	
	LEFT	RIGHT
2.0–3.5	66359-650A	66359-650B
4.0–5.5	66359-660A	66359-660B
♦♦2.0–3.5	66359-670A	66359-670B
10.0–10.5	66359-585A	66359-585B
11.0–11.5	66359-590A	66359-590B
12.0–12.5	66359-595A	66359-595B
♦♦11.0–11.5	66359-600A	66359-600B

♦♦ Pierce

NOTES: Quantities specified are shown for tandem suspension. Adjust quantities for single or tridem suspensions. Quantities of service kit components may vary from amount shown in lists.

* Item included in kit / assembly only, part not sold separately.

** Transverse Torque Rods are mandatory for the PRIMAAX EX • FIREMAAX EX | PRIMAAX • FIREMAAX suspensions regardless of axle spacing. See Literature No. 59310-004 for more information.

*** No longer available for service, see Replacement Guide on Page 34. For more information, refer to Hendrickson Technical Bulletin Literature No. SEU-0229 or contact Hendrickson Tech Services.

**** Alternate configuration of the QUIK-ALIGN fasteners. The locknuts located inboard will allow additional clearance for wider tires or tires with chains. Tightening to torque is still required ONLY on the locknut.

Air Spring Assembly

Page 16

PRIMAAX EX 23K•46K•69K
FIREMAAX EX 24K•48K

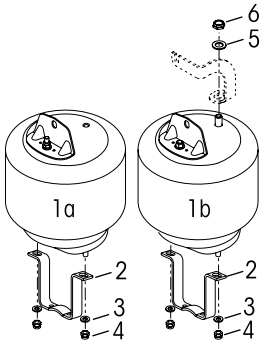

Pages 16,20,24

PRIMAAX EX
26K S•52K S•78K S | 26K •52K•78K
FIREMAAX EX
27K S•54K S | 27K •31K •54K •62K

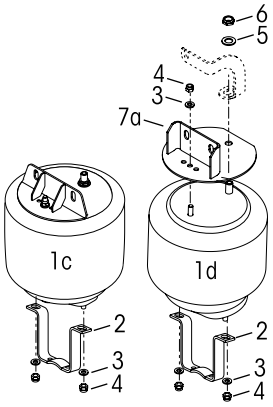

Page 18

PRIMAAX EX 23K T•46K T•69K T
FIREMAAX EX 24K T•48K T

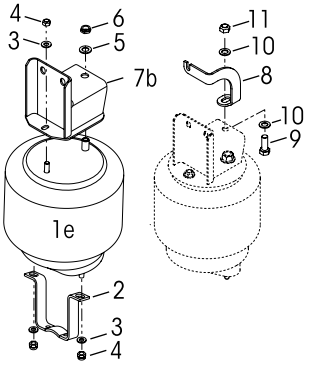

Pages 18,22,26

PRIMAAX EX
26K ST•52K ST•78K ST | 26K T•52K T•78K T
FIREMAAX EX
27K ST•54K ST | 27K T•54K T•31K T•62K T

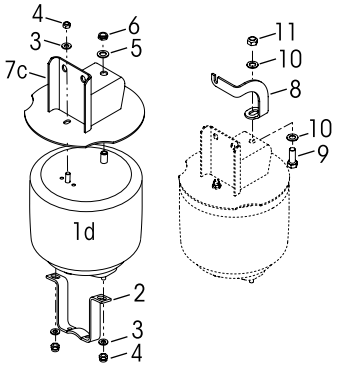

KEY NO.		PART NO.	DESCRIPTION	VEHICLE QTY.
			Air Spring Service Kit, Single	
		60961-230	Includes Key Nos. 1a, 2-4	
		60961-229	Includes Key Nos. 1b, 2-4	
		60961-744	Includes Key Nos. 1c, 2-4	
		60961-231	Includes Key Nos. 1d, 2-6	
		68056-002	Includes Key Nos. 1d, 3-6, 7a	
		60961-227	Includes Key Nos. 1e, 2-6	
1			Air Spring equipped w/Upper Air Spring Bracket	4
	a	67043-002L	PRIMAAX EX 23K•46K•69K	
	b	67392-002	FIREMAAX EX 24K•48K	
	c	67247-002	PRIMAAX EX 26K S•52K S•78K S; 26K•52K•78K	
		78761-001	PRIMAAX EX 26K ST•52K ST•78K ST; FIREMAAX EX 27K ST•54K ST, Includes Key No. 7c	
	d	67044-002	Air Spring Only PRIMAAX EX 23K T•46K T•69K T; 26K ST•52K ST•78K ST; 26K T•52K T•78K T FIREMAAX EX 24K T•48K T for Oshkosh Vehicles; 27K S•54K S; 27K ST•54K ST; 27K •31K •54K •62K ; 27K T•31K T• 54K T•62K T	
	e	67391-002L	PRIMAAX EX 23K T•46K T•69K T; FIREMAAX EX 24K T•48K T	
2		60911-002	Lower Air Spring Mounting Bracket	4
			Air Spring Fastener Service Kit, Single	
		49177-006	Lower, Includes Key Nos. 3-4	
		49177-023	Upper/Lower, Includes Key Nos. 3-6	
		49177-025	Upper/Lower, Includes Key Nos. 3-6, 9-11	
		49177-033	Lower, Includes Key Nos. 2-4	
3			*½" Flat Washer	8
4			*½"-13 UNC Locknut	8
5			*¾" Flat Washer	4
6			*¾"-16 UNF Locknut	4
7			Upper Air Spring Bracket	4
	a		FIREMAAX 27K S•54K S	
		65868-000	8½"-10" Ride Height	
	b		PRIMAAX EX 23K T•46K T•69K T; FIREMAAX EX 24K T•48K T	
		65031-003	12½", 14⅜" Ride Height	
		65031-004	15½" Ride Height	
	c		PRIMAAX EX 26K ST•52K ST•78K ST; FIREMAAX EX 27K ST•54K ST	
		65031-008	12½", 14⅜" Ride Height	
		65031-009	15½" Ride Height	
8	a	59479-003	Air Spring Gusset (if equipped)	2
	b	59479-004	Air Spring Gusset (if equipped)	2
9			*¾"-10 UNC x 2" Bolt	4
10			*¾" Flat Washer	8
11			*¾"-10 UNC Locknut	4

Severe Service Kits

Severe Service Kit No. 60632-033 | QUIK-ALIGN Pivot Bushing Axle Set

Reference Lit. No. 59310-037

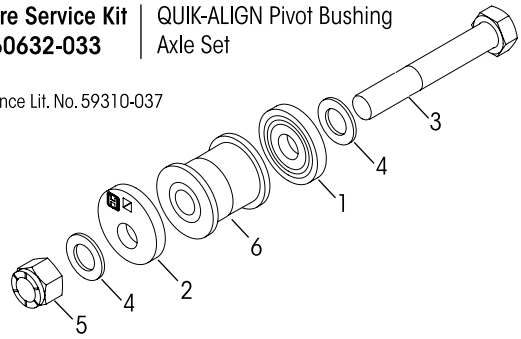

KIT NO. 60632-033

PRIMAAX EX • FIREMAAX EX | PRIMAAX • FIREMAAX
8½"-10" Ride Height

KEY NO.	CONTENTS	KIT QTY.
12	QUIK-ALIGN Concentric Collar	2
13	QUICK-ALIGN Eccentric Collar	2
14	1¼"-12 UNF x 8" Bolt	2
15	1¼" Hardened Washer	4
16	1¼"-12 UNF Nylocknut	2
17	QUIK-ALIGN Pivot Bushing	2
18	P-80 Bushing Lubricant - 10 ml., per Bushing 1	2

Severe Service Kit No. 60632-015 | QUIK-ALIGN Collar Axle Set

Reference Lit. No. 59310-037

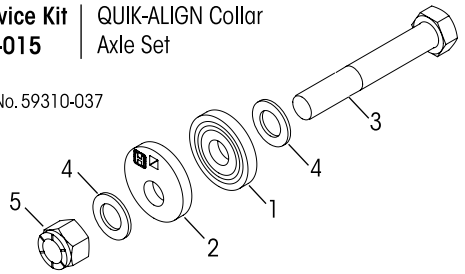

KIT NO. 60632-015

PRIMAAX EX • FIREMAAX EX | PRIMAAX • FIREMAAX
8½"-10" Ride Height

KEY NO.	CONTENTS	KIT QTY.
1	QUIK-ALIGN Concentric Collar	2
2	QUICK-ALIGN Eccentric Collar	2
3	1¼"-12 UNF x 8" Bolt	2
4	1¼" Hardened Washer	4
5	1¼"-12 UNF Nylocknut	2

Severe Service Kit No. 58821-026 | Top Pad Fasteners Axle Set

Reference Lit. No. 59310-036

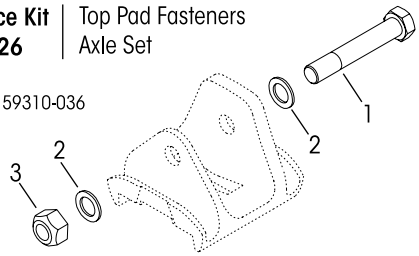

KIT NO. 58821-026

PRIMAAX 230 • 460 • 690 | 230T • 460T • 690T
FIREMAAX 240 • 480 | 240T • 480T
8½"-10"-12½"-14⅜"-15½" Ride Height, Does Not Include Top Pad

KEY NO.	CONTENTS	KIT QTY.
1	M24 x 3-6G H-Coat Hex Bolt	2
2	M24 Hardened Washer	4
3	M24 x 3-6H Locknuts	2

U-beam Assembly Aftermarket Service Kit

Service Kit No. 69565-001, Axle Set

PART NO.	DESCRIPTION	QTY.	COMMENTS
69351-000	Sikaflex 221 Polyurethane Sealant, 300 ml Tube	1	In the event any service to the suspension requiring disassembly of a U-beam assembly equipped with integrated end caps, the Loctite 277, tamper resistant caps and Sikaflex 221 polyurethane sealant must be properly installed to ensure components function to their highest efficiency.
69570-000	Loctite® 277 - 10 ml Bottle	1	
*	Tamper Resistant Cap	2	
*	⅞"-9 UNC x 3¾" Hex Bolt	2	
*	⅞" H-Coat Flat Washer	2	

PRIMAAX EX 23K • 46K • 69K • 26KS • 52KS • 78KS
FIREMAAX EX 24K • 48K • 27KS • 54KS

S – designates Small Clamp Group

8½" – 10" Ride Height

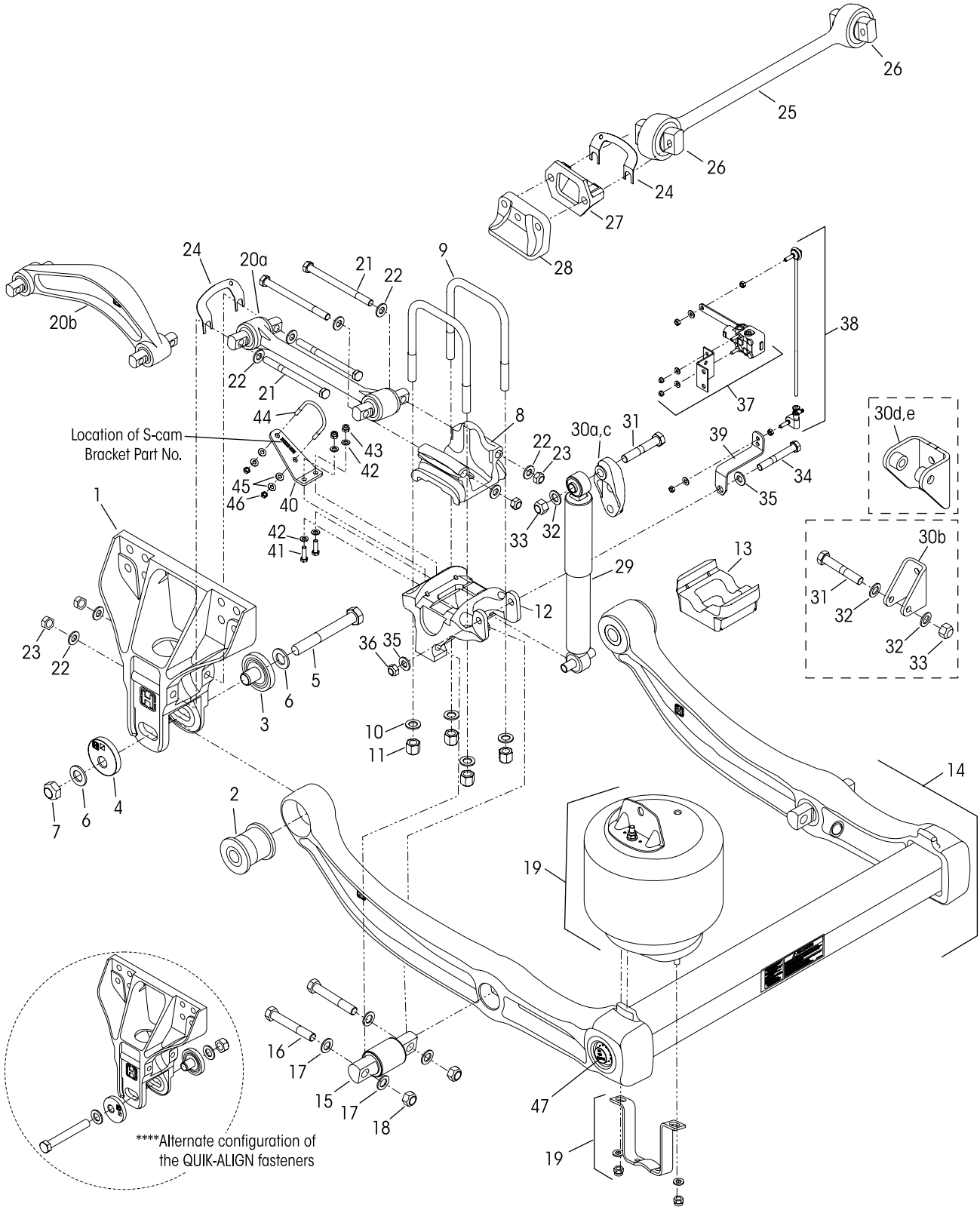

KEY NO.	PART NO.	DESCRIPTION	VEHICLE QTY.
1	67706-000	EX Frame Hanger	4
		QUIK-ALIGN® Pivot Bushing Service Kit, Includes Key Nos. 2-7, 48	
	60961-720	One Wheel End	
	60632-020	Axle Set	
		QUIK-ALIGN Collar Service Kit, Includes Key Nos. 3-7	
	60632-019	One Wheel End, *Replaces 60632-006*	
	60632-021	Axle Set	
	60632-018	**QUIK-ALIGN Fastener Service Kit, One Wheel End,** Includes Key Nos. 5-7, *Replaces 60632-005*	
2		*QUIK-ALIGN Pivot Bushing	4
3		*QUIK-ALIGN Concentric Collar	4
4		*QUIK-ALIGN Eccentric Collar	4
5		*1"-14 UNF-2A x 7½" H-Coat Hex Bolt	4
6		*1" H-Coat Flat Washer	8
7		*1"-14 UNF-2B H-Coat Locknut	4
8	65289-000	Top Pad	4
		U-bolt Fasteners Service Kit, One Wheel End,	
	48718-129	Includes Key Nos. 9a-11	
	48718-130	Includes Key Nos. 9b-11	
9		*¾" Square U-bolt	8
a		8⅞" Length - 10" Ride Height	
b		10⅜" Length - 8½" Ride Height	
10		*¾" Flat Washer	16
11		*¾"-16 UNF U-bolt Locknut	16
12	60556-XXX	Bottom Cap - Front and Rear (Casting No. 60272-000), *See Selection Guide on Page 11*	4
13	65139-003	Axle Spacer, 8½ Ride Height	4
14		U-beam Assembly, Includes Key Nos. 2,15	2
		• Front	
	67249-004	34.0" Frame Width	
	67249-012	34.3" Frame Width	
	67249-010	34.5" Frame Width	
	67249-024	34.8" Frame Width	
	67249-018	35.0" Frame Width	
		• Rear	
	67249-003	34.0" Frame Width	
	67249-011	34.3" Frame Width	
	67249-009	34.5" Frame Width	
	67249-023	34.8" Frame Width	
	67249-017	35.0" Frame Width	
		Single D-pin Bushing Service Kit,	
	34013-117	Includes Key Nos. 15, 16a, 17-18	
	34013-107	Includes Key Nos. 15, 16b, 17-18	
	34013-201	Includes Key Nos. 15, 16c, 17-18	
	34013-116	Includes Key Nos. 15, 16d, 17-18	
15		*D-pin Bushing	4
		D-pin Fastener Service Kit, Axle Set,	
	56659-012	Includes Key Nos. 16a, 17-18	
	56659-009	Includes Key Nos. 16b, 17-18	
	56659-014	Includes Key Nos. 16c, 17-18	
	56659-013	Includes Key Nos. 16d, 17-18	
16		*¾"-16 UNF Bolt	8
a		4¾" Length	
b		5" Length	
c		5¼" Length	
d		5½" Length	
17		*¾" Flat Washer	16
18		*¾"-16 UNF Locknut	8
19		Air Spring Assembly, *Configuration may vary per suspension capacity, See Selection Guide on Page 14*	4

KEY NO.	PART NO.	DESCRIPTION	VEHICLE QTY.
20 a, b		Longitudinal Torque Rod Assembly *See Selection Guide on Page 11*	4
	49176-032	**Longitudinal Torque Rod Bolt Service Kit, One Torque Rod,** Includes Key Nos. 21-23	
21		*⅝"-11 UNC-2B x 8" Bolt	16
22		*⅝" Flat Washer	32
23		*⅝"-11 UNC-2A Locknut	16
24	49689-000L	Shim	As Req.
25	72000-XXXS	**ULTRA ROD® PLUS™ Transverse Torque Rod Assembly, Includes Bushings, Specify length in mm	2
26	64400-002L	Bushing - Straddle Bar Pin (⅝" Holes)	4
27	22186-000	Transverse Torque Rod Frame Bracket	2
28	60593-000L	Axle Stop, Frame Mounted	4
29		Shock Absorber	4
a	60657-003L	Standard	
b	70807-001	FIREMAAX, (Not Shown) *New and retrofitted models, not interchangeable with 29a*	
30		Upper Shock Frame Bracket	4
a	67463-002	Standard Cast	
b	59423-001	Standard Fabricated Clevis	
c	78250-002	High Strength Cast, *use with 29b*	
d	78896-001	High Strength Clevis, High Mount, *use with 29b*	
e	78896-002	High Strength Clevis, Low Mount, *use with 29b*	
		Shock Absorber Fastener Service Kit	
	50754-012	One Wheel End, Includes Key Nos. 31a, 32-36	
	50754-044	One Wheel End, Includes Key Nos. 31b, 32-36	
	50754-055	One Wheel End, Includes Key Nos. 31c, 32-36	
	50754-051	One Wheel End, Includes Key Nos. 31d, 32-36	
31		*¾"-10 UNC Upper Shock Bolt	4
a		3¾", *use with 30b*	
b		4¼", *use with 30a,b*	
c		5", *use with 30c and Oshkosh Bracket*	
d		6½", *use with 30d,e*	
32		*¾" Flat Washer	As Req.
33		*¾"-10 UNC Locknut	4
34		*⅝"-11 UNC x 6" Lower Shock Bolt	4
35		*⅝" Flat Washer	8
36		*⅝"-11 UNC-2B Locknut	4
	58525-019	**Height Control Valve Assembly Service Kit,** Includes Key Nos. 37-39	
37	57977-000	Height Control Valve Assembly	1
38	58994-005L	HCV Linkage Assembly	1
39		*Height Control Valve Linkage Bracket	1
	NOTE	**Key Nos. 40-46** are not required if equipped with 20b and Air Disc Brake	
40	64508-XXX	S-cam Support Bracket, *locate part no. on component*	4
	58821-017	**S-cam Fastener Service Kit, Axle Set,** Includes Key Nos. 41-46	
41		*⅜"-16 UNC x 1¼" Hex Bolt	8
42		*⅜" Hardened Washer	16
43		*⅜"-16 UNC Locknut	8
44		*5/16" S-cam U-bolt	4
45		*5/16" Hardened Washer	16
46		*5/16"-18 UNC Locknut	8
47	69565-001	**U-beam Assembly Enhancement Aftermarket Service Kit, Axle Set,** *See Page 15 for contents*	
48	70867-001	P-80 Lubricant - 10 ml (Not Shown)	per Bushing 1

PRIMAAX EX 23KT • 46KT • 69KT • 26KST • 52KST • 78KST
FIREMAAX EX 24KT • 48KT • 27KST • 54KST

S – designates Small Clamp Group

T – designates Tall Ride Height 12½" – 14⅜" – 15½"

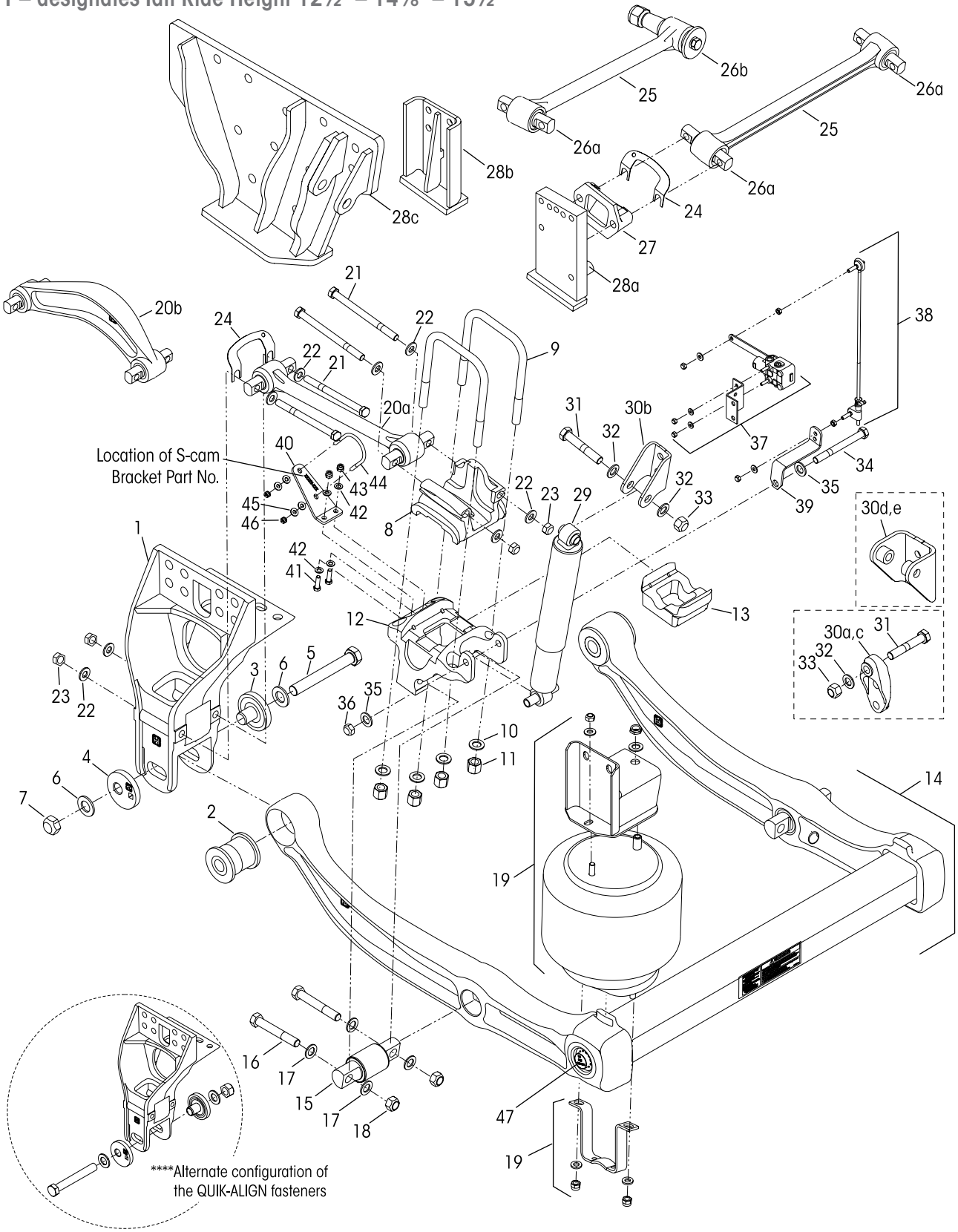

KEY NO.	PART NO.	DESCRIPTION	VEHICLE QTY.
1	67299-001	LH EX Frame Hanger	2
	67299-002	RH EX Frame Hanger	2
		QUIK-ALIGN Pivot Bushing Service Kit, Includes Key Nos. 2-7, 48	
	60961-720	One Wheel End	
	60632-020	Axle Set	
		QUIK-ALIGN Collar Service Kit, Includes Key Nos. 3-7	
	60632-019	One Wheel End, *Replaces 60632-006*	
	60632-021	Axle Set	
	60632-018	**QUIK-ALIGN Fastener Service Kit, One Wheel End**, Includes Key Nos. 5-7, *Replaces 60632-005*	
2		*QUIK-ALIGN Pivot Bushing	4
3		*QUIK-ALIGN Concentric Collar	4
4		*QUIK-ALIGN Eccentric Collar	4
5		*1"-14 UNF-2A x 7½" H-Coat Hex Bolt	4
6		*1" H-Coat Flat Washer	8
7		*1"-14 UNF-2B H-Coat Locknut	4
8	65289-000	Top Pad	4
		U-bolt Service Kit, One Wheel End,	
	48718-129	Includes Key Nos. 9a-11	
	48718-130	Includes Key Nos. 9b-11	
9		*¾" Square U-bolt	8
a		8⅞" Length - 14⅜"-15½" Ride Height	
b		10⅜" Length - 12½" Ride Height	
10		*¾" Flat Washer	16
11		*¾"-16 UNF U-bolt Locknut	16
12	60556-XXX	Bottom Cap, *See Page 11 for part no. location*	4
13	65139-003	Axle Spacer - 12½" Ride Height	4
14		U-beam Assembly, Includes Key Nos. 2, 15	2
		• Front	
	67249-004	34.0" Frame Width	
	67249-012	34.3" Frame Width	
	67249-010	34.5" Frame Width	
	67249-024	34.8" Frame Width	
	67249-018	35.0" Frame Width	
		• Rear	
	67249-003	34.0" Frame Width	
	67249-011	34.3" Frame Width	
	67249-009	34.5" Frame Width	
	67249-023	34.8" Frame Width	
	67249-017	35.0" Frame Width	
		Single D-pin Bushing Service Kit,	
	34013-117	Includes Key Nos. 15, 16a, 17-18	
	34013-107	Includes Key Nos. 15, 16b, 17-18	
	34013-201	Includes Key Nos. 15, 16c, 17-18	
	34013-116	Includes Key Nos. 15, 16d, 17-18	
15		*D-pin Bushing	4
		D-pin Fastener Service Kit, Axle Set,	
	56659-012	Includes Key Nos. 16a, 17-18	
	56659-009	Includes Key Nos. 16b, 17-18	
	56659-014	Includes Key Nos. 16c, 17-18	
	56659-013	Includes Key Nos. 16d, 17-18	
16		*¾"-16 UNF Bolt	8
a		4¾" Length	
b		5" Length	
c		5¼" Length	
d		5½" Length	
17		*¾" Flat Washer	16
18		*¾"-16 UNF Locknut	8
19		Air Spring Assembly, *Configuration may vary per suspension capacity, See Selection Guide on Page 14*	4
20 a, b		Longitudinal Torque Rod Assembly *See Selection Guide on Page 11*	4
	49176-032	**Longitudinal Torque Rod Bolt Service Kit, One Torque Rod,** Includes Key Nos.21-23	
21		*⅝"-11 UNC x 8" Bolt	16
22		*⅝" Flat Washer	32
23		*⅝"-11 UNC Locknut	16
24	49689-000L	Shim	As Req.
25		**Transverse Torque Rod Assembly, Includes Bushing	2
	62250-515	Terex Advance Mixer Vehicles	
	62000-620	Oshkosh Truck Vehicles	
	62000-630	Oshkosh Truck Vehicles	
26 a	47691-000L	Straddle Bar Pin Bushing	
b	64809-000L	Taper Pin Bushing, Includes Fasteners	
27	22186-000	Transverse Torque Rod Frame Bracket	2
28		Axle Stop, Frame Mounted	4
a	64696-002	RH Rear - Oshkosh	
a	64696-003	LH Front - Oshkosh	
b	64692-001	LH Rear - Indiana Phoenix, Oshkosh	
b	64692-004	RH Front- Oshkosh	
b	64692-006	RH Front- Indiana Phoenix	
c	77773-001	RH Rear - Oshkosh, *not interchangeable w/28a,b*	
c	77773-002	LH Front - Oshkosh, *not interchangeable w/28a,b*	
29		Shock Absorber	4
a	60657-003L	Standard	
b	70807-001	FIREMAAX, (Not Shown) *New and retrofitted models, not interchangeable with 29a*	
c	60665-011	Oshkosh Truck Vehicles	
30		Upper Shock Frame Bracket	4
a	67463-002	Standard Cast	
b	59423-001	Standard Fabricated Clevis	
c	78250-002	High Strength Cast, *use with 29b*	
d	78896-001	High Strength Clevis, High Mount, *use with 29b*	
e	78896-002	High Strength Clevis, Low Mount, *use with 29b*	
		Shock Absorber Fastener Service Kit	
	50754-012	One Wheel End, Includes Key Nos. 31a, 32-36	
	50754-044	One Wheel End, Includes Key Nos. 31b, 32-36	
	50754-055	One Wheel End, Includes Key Nos. 31c, 32-36	
	50754-051	One Wheel End, Includes Key Nos. 31d, 32-36	
31		*¾"-10 UNC Upper Shock Bolt	4
a		3¾", *use with 30b*	
b		4¼", *use with 30a,b*	
c		5", *use with 30c*	
d		6½", *use with 30d,e*	
32		*¾" Flat Washer	As Req.
33		*¾"-10 UNC Locknut	4
34		*⅝"-11 UNC x 6" Lower Shock Bolt	4
35		*⅝" Flat Washer	8
36		*⅝"-11 UNC-2B Locknut	4
	58525-019	**Height Control Valve Assembly Service Kit,** Includes Key Nos. 37, 38b, 39	
37	57977-000	Height Control Valve Assembly	1
38		HCV Linkage Assembly	1
a	58994-031	7.48" Length, Terex Only	
b	58994-005L	14.84" Length	
c	58994-029	20.24" Length	
39		Height Control Valve Linkage Bracket	1
	NOTE	**Key Nos. 40-46** not required if equipped with 20b and Air Disc Brake	
40	64508-XXX	S-cam Support Bracket, *Locate part number on component*	4
	58821-017	**S-cam Fastener Service Kit, Axle Set,** Includes Key Nos. 41-46	
41		*⅜"-16 UNC x 1¼" Hex Bolt	8
42		*⅜" Hardened Washer	16
43		*⅜"-16 UNC Locknut	8
44		*5/16" S-cam U-bolt	4
45		*5/16" Hardened Washer	16
46		*5/16"-18 UNC Locknut	8
47	69565-001	**U-beam Assembly Enhancement Aftermarket Service Kit, Axle Set,** *See Page 15 for contents*	
48	70867-001	P-80 Lubricant - 10 ml (Not Shown)	per Bushing 1

PRIMAAX EX 26K • 52K • 78K | FIREMAAX EX 27K • 31K • 54K • 62K

8½" – 10" Ride Height

Drum Brakes

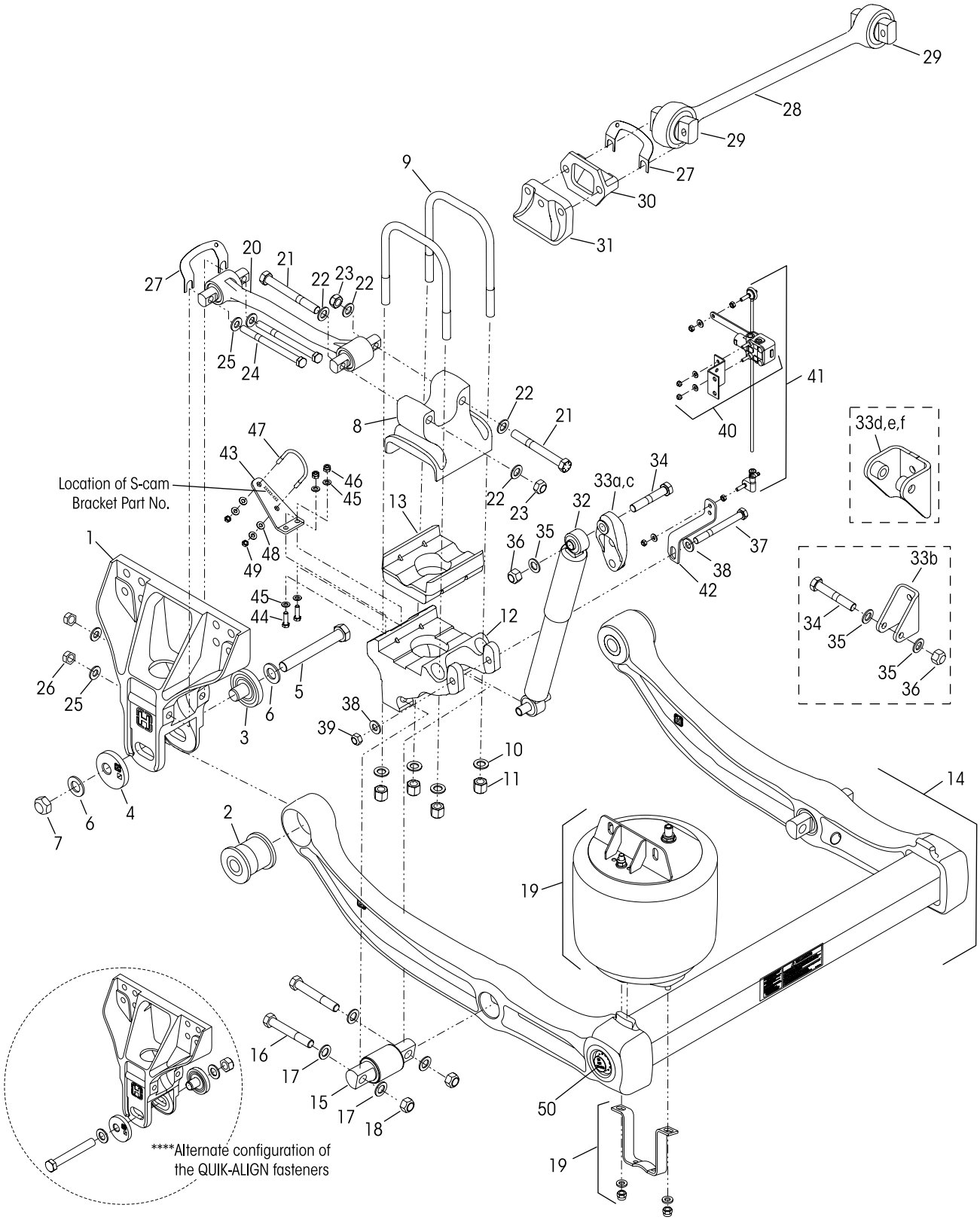

KEY NO.	PART NO.	DESCRIPTION	VEHICLE QTY.
1	67706-000	EX Frame Hanger	4
		QUIK-ALIGN Pivot Bushing Service Kit, Includes Key Nos. 2-7, 51	
	60961-720	One Wheel End	
	60632-020	Axle Set	
		QUIK-ALIGN Collar Service Kit, Includes Key Nos. 3-7	
	60632-019	One Wheel End, *Replaces 60632-006*	
	60632-021	Axle Set	
	60632-026	Axle Set, Pierce Only	
	60632-018	**QUIK-ALIGN Fastener Service Kit, One Wheel End**, Includes Key Nos. 5-7, *Replaces 60632-005*	
2		*QUIK-ALIGN Pivot Bushing	4
3		*QUIK-ALIGN Concentric Collar	4
4		*QUIK-ALIGN Eccentric Collar	4
5		*1"-14 UNF-2A x 7½" H-Coat Hex Bolt	4
6		*1" H-Coat Flat Washer	8
7		*1"-14 UNF-2B H-Coat Locknut	4
8		Top Pad, *See illustration on Page 12*	4
		U-bolt Service Kit, One Wheel End	
	48718-120	10" Ride Height, Includes Key Nos. 9a-9b, 10-11	
	48718-121	8½" Ride Height, Includes Key Nos. 9c-9d, 10-11	
9		*¾" Square U-bolt	8
a		10", Outboard 10" Ride Height	
b		10½", Inboard 10" Ride Height	
c		11½", Outboard 8½" Ride Height	
d		12", Inboard 8½" Ride Height	
10		*¾" Flat Washer	16
11		*¾"-16 UNF U-bolt Locknut	16
12		Bottom Cap - Front and Rear *See Selection Guide on Page 12*	4
13		Axle Spacer - Front and Rear *See Selection Guide on Page 12*	4
14		U-beam Assembly, Includes Key Nos. 2,15	2
		• Front	
	67249-006	34.0" Frame Width	
	67249-014	34.3" Frame Width	
	67249-016	34.5" Frame Width	
	67249-026	34.8" Frame Width	
		• Rear	
	67249-005	34.0" Frame Width	
	67249-013	34.3" Frame Width	
	67249-015	34.5" Frame Width	
	67249-025	34.8" Frame Width	
	34013-114	**Single D-pin Bushing Service Kit,** Includes Key Nos. 15-18	
15		*D-pin Bushing	4
	56659-010	**D-pin Fastener Service Kit, Axle Set** Includes Key Nos. 16-18	
16		*⅞"-14 UNF x 5" Bolt	8
17		*⅞" Flat Washer	16
18		*⅞"-14 UNF Locknut	8
19		Air Spring Assembly, *Configuration may vary per suspension capacity, See Selection Guide on Page 14*	4
20		Longitudinal Torque Rod Assembly *See Selection Guide on Page 13*	4
		Longitudinal Torque Rod Fastener Service Kit,	
	49176-031	Axle Set, Includes Key Nos. 21-26	
	49176-032	Axle Set, Includes Key Nos. 24-26	

KEY NO.	PART NO.	DESCRIPTION	VEHICLE QTY.
21		*¾"-16 UNF x 6" Hex Bolt	8
22		*¾" Flat Washer	16
23		*¾"-16 UNF Locknut	8
24		*⅝"-11 UNC-2B x 8" Bolt	8
25		*⅝" Flat Washer	16
26		*⅝"-11 UNC-2A Locknut	8
27	49689-000L	Shim	As Req.
28	72000-XXXS	**ULTRA ROD PLUS Transverse Torque Rod Assembly, Includes Bushings, Specify length in mm	2
29	64400-002L	Bushing - Straddle Bar Pin - ⅝" Holes	4
30	22186-000	Transverse Torque Rod Frame Bracket	2
31	60593-000L	Axle Stop, Frame Mounted	4
32		Shock Absorber	4
a	60665-013L	Standard with Drum Brakes	
b	68069-002	FIREMAAX EX 31K•62K - Old Setup	
c	70807-002	FIREMAAX EX, (Not Shown) *New and retrofitted models, not interchangeable with 32a,b*	
33		Upper Shock Frame Bracket	4
a	67463-002	Standard Cast	
b	59423-001	Standard Fabricated Clevis	
c	59423-002	FIREMAAX EX 31K•62K, *use with 33b*	
d	78250-002	High Strength Cast, *use with 33c*	
e	78896-001	High Strength Clevis, High Mount, *use with 33c*	
f	78896-002	High Strength Clevis, Low Mount, *use with 33c*	
		Shock Absorber Fastener Service Kit	
	50754-034	One Wheel End, Includes Key Nos. 34a, 35-39	
	50754-036	One Wheel End, Includes Key Nos. 34b, 35-39	
	50754-056	One Wheel End, Includes Key Nos. 34c, 35-39	
	50754-050	One Wheel End, Includes Key Nos. 34d, 35-39	
34		*¾"-10 UNC Upper Shock Bolt	4
a		3¾", *use with 33b*	
b		4¼", *use with 33a,b,c*	
c		5", *use with 33d*	
d		6½", *use with 33e,f*	
35		*¾" Flat Washer	As Req.
36		*¾"-10 UNC Locknut	4
37		*⅝"-11 UNC x 7" Lower Shock Bolt	4
38		*⅝" Flat Washer	8
39		*⅝"-11 UNC-2B Locknut	4
	58525-019	**Height Control Valve Assembly Service Kit,** Includes Key Nos. 40-42	
40	57977-000	Height Control Valve Assembly	As Req.
41	58994-005L	HCV Linkage Assembly	As Req.
42		*Height Control Valve Linkage Bracket	As Req.
43	64508-XXX	S-cam Support Bracket, *Locate part number on component*	4
	58821-017	**S-cam Fastener Service Kit, Axle Set,** Includes Key Nos. 44-49	
44		*⅜"-16 UNC x 1¼" Hex Bolt	8
45		*⅜" Hardened Washer	16
46		*⅜"-16 UNC Locknut	8
47		*5/16" S-cam U-bolt	4
48		*5/16" Hardened Washer	16
49		*5/16"-18 UNC Locknut	8
50	69565-001	**U-beam Assembly Enhancement Aftermarket Service Kit, Axle Set,** *See Page 15 for contents*	
51	70867-001	P-80 Lubricant - 10 ml (Not Shown)	per Bushing 1
	30272-000	Pressure Protection Valve, E-One Fire/Rescue Vehicles Only (Not Shown)	1

PRIMAAX EX 26KT • 52KT • 78KT | FIREMAAX EX 27KT • 31KT • 54KT • 62KT

T – designates Tall Ride Height 14⅜" – 15½"
Drum Brakes

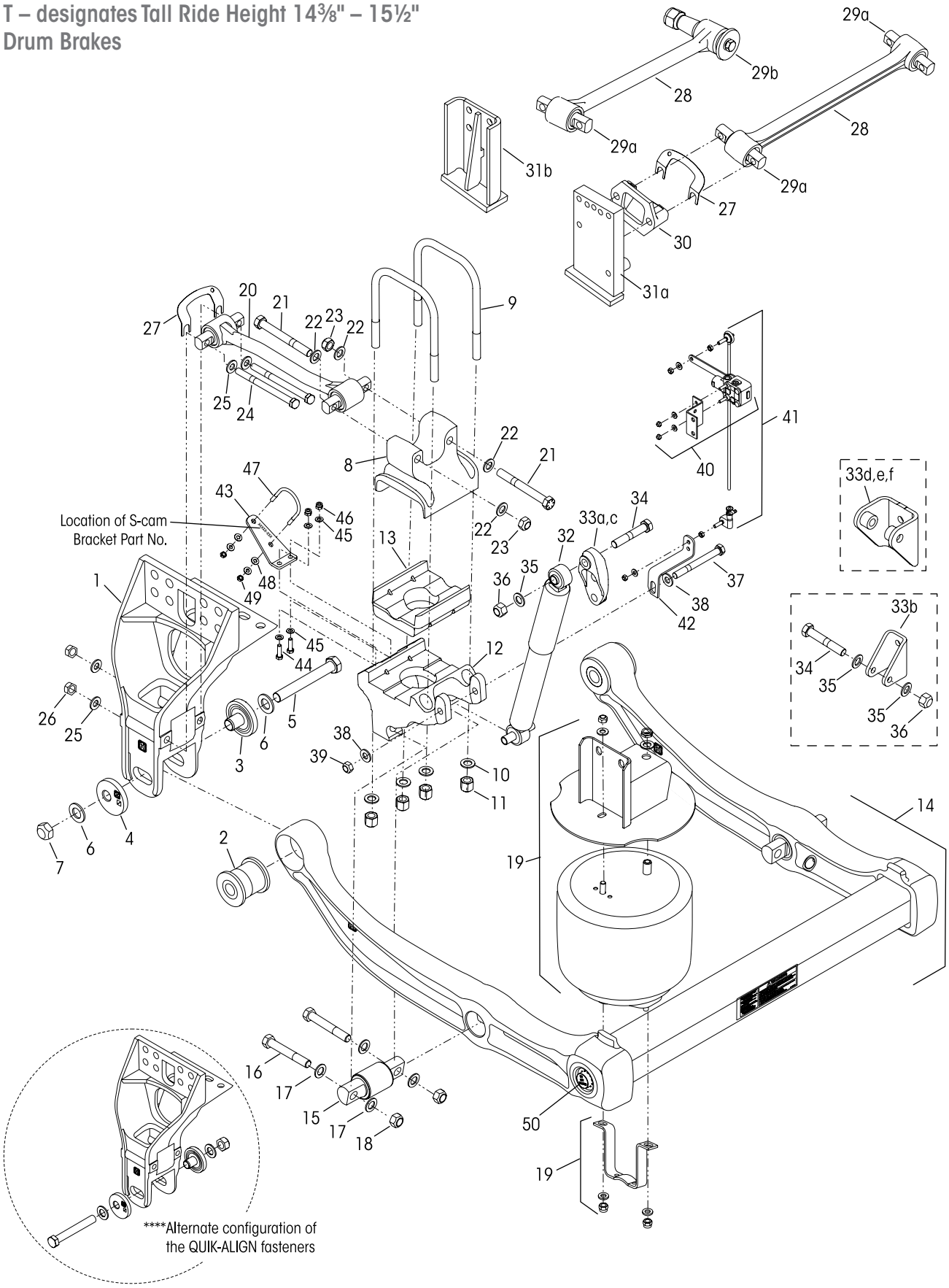

KEY NO.	PART NO.	DESCRIPTION	VEHICLE QTY.
1	67299-001	LH EX Frame Hanger	2
	67299-002	RH EX Frame Hanger	2
		QUIK-ALIGN Pivot Bushing Service Kit, Includes Key Nos. 2-7, 51	
	60961-720	One Wheel End	
	60632-020	Axle Set	
		QUIK-ALIGN Collar Service Kit, Includes Key Nos. 3-7	
	60632-019	One Wheel End	
	60632-021	Axle Set	
	60632-026	Axle Set, Pierce Only	
	60632-018	**QUIK-ALIGN Fastener Service Kit, One Wheel End**, Includes Key Nos. 5-7	
2		*QUIK-ALIGN Pivot Bushing	4
3		*QUIK-ALIGN Concentric Collar	4
4		*QUIK-ALIGN Eccentric Collar	4
5		*1"-14 UNF-2A x 7½" H-Coat Hex Bolt	4
6		*1" H-Coat Flat Washer	8
7		*1"-14 UNF-2B H-Coat Locknut	4
8		Top Pad, *See illustration on Page 12*	4
		U-bolt Service Kit, One Wheel End	
	48718-120	14⅜"-15½" Ride Height, Includes Key Nos. 9a,b, 10-11	
	48718-121	12½" Ride Height, Includes Key Nos. 9c,d, 10-11	
9		*¾" Square U-bolt	8
a		10", Outboard 14⅜"-15½" Ride Height	
b		10½", Inboard 14⅜"-15½" Ride Height	
c		11½", Outboard 12½" Ride Height	
d		12", Inboard 12½" Ride Height	
10		*¾" Flat Washer	16
11		*¾"-16 UNF U-bolt Locknut	16
12		Bottom Cap - Front and Rear *See Selection Guide on Page 12*	4
13		Axle Spacer - Front and Rear *See Selection Guide on Page 12*	4
14		U-beam Assembly, Includes Key Nos. 2,15	2
		• Front	
	67249-006	34.0" Frame Width	
	67249-014	34.3" Frame Width	
	67249-016	34.5" Frame Width	
	67249-026	34.8" Frame Width	
		• Rear	
	67249-005	34.0" Frame Width	
	67249-013	34.3" Frame Width	
	67249-015	34.5" Frame Width	
	67249-025	34.8" Frame Width	
	34013-114	**Single D-pin Bushing Service Kit,** Includes Key Nos. 15-18	
15		*D-pin Bushing	4
	56659-010	**D-pin Fastener Service Kit, Axle Set** Includes Key Nos. 16-18	
16		*⅞"-14 UNF x 5" Bolt	8
17		*⅞" Flat Washer	16
18		*⅞"-14 UNF Locknut	8
19		Air Spring Assembly, *Configuration may vary per suspension capacity, See Selection Guide on Page 14*	4
20		Longitudinal Torque Rod Assembly *See Selection Guide on Page 13*	4
		Longitudinal Torque Rod Fastener Service Kit,	
	49176-031	Axle Set, Includes Key Nos. 21-26	
	49176-032	Axle Set, Includes Key Nos. 24-26	
21		*¾"-16 UNF x 6" Hex Bolt	8
22		*¾" Flat Washer	16
23		*¾"-16 UNF Locknut	8
24		*⅝"-11 UNC-2B x 8" Bolt	8
25		*⅝" Flat Washer	16
26		*⅝"-11 UNC-2A Locknut	8
27	49689-000L	Shim	As Req.
28		**Transverse Torque Rod Assembly, Includes Bushing	2
	62250-515	Terex Advance Mixer Vehicles	
	62000-620	Oshkosh Truck Vehicles	
	62000-630	Oshkosh Truck Vehicles	
29 a	47691-000L	Straddle Torque Rod Bushing	As Req.
b	64809-000L	Taper Pin Bushing, Includes Fasteners	
30	22186-000	Transverse Torque Rod Frame Bracket	2
31		Axle Stop, Frame Mounted	4
a	64696-002	Right Hand Rear - Oshkosh	
a	64696-003	Left Hand Front - Oshkosh	
b	64692-001	Left Hand Rear - Indiana Phoenix, Oshkosh	
b	64692-004	Right Hand Front- Oshkosh	
b	64692-006	Right Hand Front- Indiana Phoenix	
32		Shock Absorber	4
a	60665-013L	Standard	
b	68069-002	FIREMAAX EX 31K •62K - Old Setup	
c	70807-002	FIREMAAX EX, (Not Shown) *New and retrofitted models, not interchangeable with 32a,b*	
33		Upper Shock Frame Bracket	4
a	67463-002	Standard Cast	
b	59423-001	Standard Fabricated Clevis	
c	59423-002	FIREMAAX EX 31K•62K, *use with 32b*	
d	78250-002	High Strength Cast, *use with 32c*	
e	78896-001	High Strength Clevis, High Mount, *use with 32c*	
f	78896-002	High Strength Clevis, Low Mount, *use with 32c*	
		Shock Absorber Fastener Service Kit	
	50754-034	One Wheel End, Includes Key Nos. 34a, 35-39	
	50754-036	One Wheel End, Includes Key Nos. 34b, 35-39	
	50754-056	One Wheel End, Includes Key Nos. 34c, 35-39	
	50754-050	One Wheel End, Includes Key Nos. 34d, 35-39	
34		*¾"-10 UNC Upper Shock Bolt	4
a		3¾", *use with 33b*	
b		4¼", *use with 33a,b,c*	
c		5", *use with 33d*	
d		6½", *use with 33e,f*	
35		*¾" Flat Washer	As Req.
36		*¾"-10 UNC Locknut	4
37		*⅝"-11 UNC x 6" Lower Shock Bolt	4
38		*⅝" Flat Washer	8
39		*⅝"-11 UNC-2B Locknut	4
	58525-019	**Height Control Valve Assembly Service Kit,** Includes Key Nos. 40, 41a, 42	
40	57977-000	Height Control Valve Assembly	As Req.
41		HCV Linkage Assembly	1
a	58994-005L	14.84" Length	
b	58994-029	20.24" Length	
42		*Height Control Valve Linkage Bracket	As Req.
43	64508-XXX	S-cam Support Bracket, *Locate part number on component*	4
	58821-017	**S-cam Service Kit, Axle Set**, Includes Key Nos. 44-49	
44		*⅜"-16 UNC x 1¼" Hex Bolt	8
45		*⅜" Hardened Washer	16
46		*⅜"-16 UNC Locknut	8
47		*5/16" S-cam U-bolt	4
48		*5/16" Hardened Washer	16
49		*5/16"-18 UNC Locknut	8
50	69565-001	**U-beam Assembly Enhancement Aftermarket Service Kit, Axle Set,** *See Page 15 for contents*	
51	70867-001	P-80 Lubricant - 10 ml (Not Shown)	per Bushing 1

PRIMAAX EX 26K • 52K • 78K | FIREMAAX EX 27K • 31K • 54K • 62K

8½" – 10" Ride Height
Air Disc Brakes

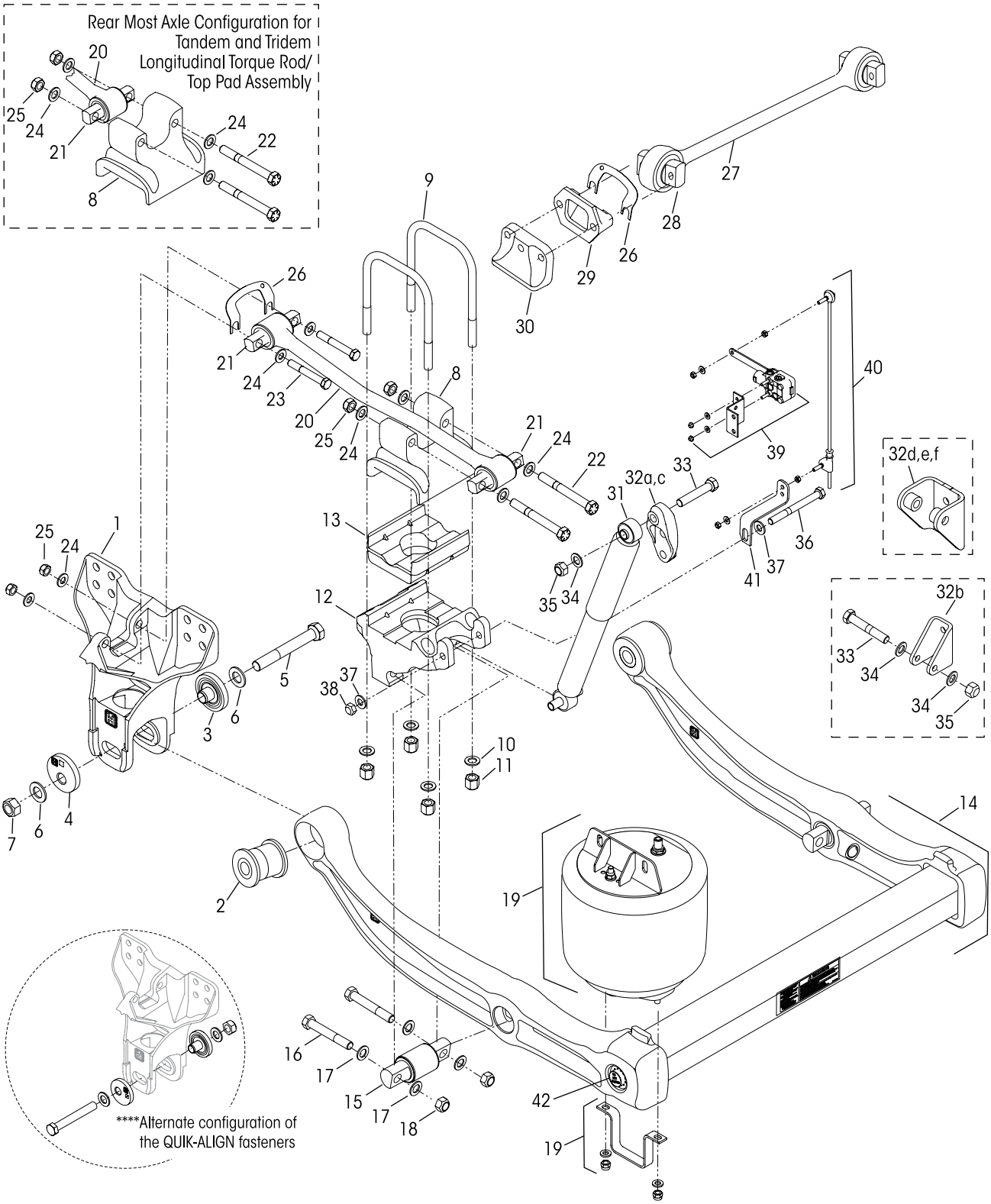

KEY NO.	PART NO.	DESCRIPTION	VEHICLE QTY.
1	60821-001	Frame Hanger	4
		QUIK-ALIGN Pivot Bushing Service Kit, Includes Key Nos. 2-7, 43	
	60961-720	One Wheel End	
	60632-020	Axle Set	
		QUIK-ALIGN Collar Service Kit, Includes Key Nos. 3-7	
	60632-019	One Wheel End	
	60632-021	Axle Set	
	60632-018	**QUIK-ALIGN Fastener Service Kit, One Wheel End**, Includes Key Nos. 5-7	
2		*QUIK-ALIGN Pivot Bushing	4
3		*QUIK-ALIGN Concentric Collar	4
4		*QUIK-ALIGN Eccentric Collar	4
5		*1"-14 UNF-2A x 7½" H-Coat Hex Bolt	4
6		*1" H-Coat Flat Washer	8
7		*1"-14 UNF-2B H-Coat Locknut	4
8		Top Pad, *See illustration on Page 12*	4
		U-bolt Service Kit, One Wheel End	
	48718-120	Includes Key Nos. 9a, b, 10-11	
	48718-121	Includes Key Nos. 9c, d, 10-11	
9		*¾" Square U-bolt	8
a		10", Outboard 10" Ride Height	
b		10½", Inboard 10" Ride Height	
c		11½", Outboard 8½" Ride Height	
d		12", Inboard 8½" Ride Height	
10		*¾" Flat Washer	16
11		*¾"-16 UNF U-bolt Locknut	16
12		Bottom Cap - Front and Rear *See Selection Guide on Page 12*	4
13		Axle Spacer, *See Selection Guide on Page 12*	4
14		U-beam Assembly, Includes Key Nos. 2,15	2
		• Front	
	67249-006	34.0" Frame Width	
	67249-014	34.3" Frame Width	
	67249-016	34.5" Frame Width	
	67249-026	34.8" Frame Width	
		• Rear	
	67249-005	34.0" Frame Width	
	67249-013	34.3" Frame Width	
	67249-015	34.5" Frame Width	
	67249-025	34.8" Frame Width	
	34013-114	**Single D-pin Bushing Service Kit,** Includes Key Nos. 15-18	
15		*D-pin Bushing	4
	56659-010	**D-pin Fastener Service Kit, Axle Set** Includes Key Nos. 16-18	
16		*⅞"-14 UNF x 5" Bolt	8
17		*⅞" Flat Washer	16
18		*⅞"-14 UNF Locknut	8
19		Air Spring Assembly, *Configuration may vary per suspension capacity, See Selection Guide on Page 14*	4

KEY NO.	PART NO.	DESCRIPTION	VEHICLE QTY.
20		Longitudinal Torque Rod Assembly *See Selection Guide on Page 13*	4
21	69210-000L	Bushing - Straddle Bar Pin (¾" Holes)	8
	49176-017	**Longitudinal Torque Rod Fastener Kit, Axle Set** Includes Key No. 22-25	
22		*¾"-16 UNF 6" Hex Bolt	8
23		*¾"-16 UNF 3¾" Hex Bolt	8
24		*¾" Flat Washer	32
25		*¾"-16 UNF Locknut	16
26	49689-000L	Shim	As Req.
27	72000-XXXS	**ULTRA ROD PLUS Transverse Torque Rod Assembly, Includes Bushings, Specify length in mm	2
28	64400-002L	Bushing - Straddle Bar Pin - ⅝" Holes	4
29	22186-000	Transverse Torque Rod Frame Bracket	2
30	60593-000L	Axle Stop, Frame Mounted	4
31		Shock Absorber	4
a	60665-015	Standard with Air Disc Brake	
b	68069-002	FIREMAAX EX 31K•62K - Old Setup	
c	70807-002	FIREMAAX EX, (Not Shown) *New and retrofitted models, not interchangeable with 31a,b*	
32		Upper Shock Frame Bracket	4
a	67463-002	Standard Cast	
b	59423-001	Standard Fabricated Clevis	
c	59423-002	FIREMAAX 31K•62K, *use with 31b*	
d	78250-002	High Strength Cast, *use with 31c*	
e	78896-001	High Strength Clevis, High Mount, *use with 31c*	
f	78896-002	High Strength Clevis, Low Mount, *use with 31c*	
		Shock Absorber Fastener Service Kit	
	50754-036	One Wheel End, Includes Key Nos. 43a, 34-38	
	50754-056	One Wheel End, Includes Key Nos. 43b, 34-38	
	50754-050	One Wheel End, Includes Key Nos. 43c, 34-38	
33		*¾"-10 UNC Upper Shock Bolt	4
a		4¼", *use with 32a,b,c*	
b		5", *use with 32d*	
c		6½", *use with 32e,f*	
34		*¾" Flat Washer	As Req.
35		*¾"-10 UNC Locknut	4
36		*⅝"-11 UNC x 7" Lower Shock Bolt	4
37		*⅝" Flat Washer	8
38		*⅝"-11 UNC-2B Locknut	4
	58525-019	**Height Control Valve Assembly Service Kit,** Includes Key Nos. 39-41	
39	57977-000	Height Control Valve Assembly,	As Req.
40	58994-005L	HCV Linkage Assembly,	As Req.
41		*Height Control Valve Linkage Bracket	As Req.
42	69565-001	**U-beam Assembly Enhancement Aftermarket Service Kit, Axle Set,** *See Page 15 for contents*	
43	70867-001	P-80 Lubricant - 10 ml (Not Shown)	per Bushing 1

PRIMAAX EX 26KT • 52KT • 78KT | FIREMAAX EX 27KT • 31KT • 54KT • 62KT

T – designates Tall Ride Height 12½" – 14⅜" – 15½"

Air Disc Brakes

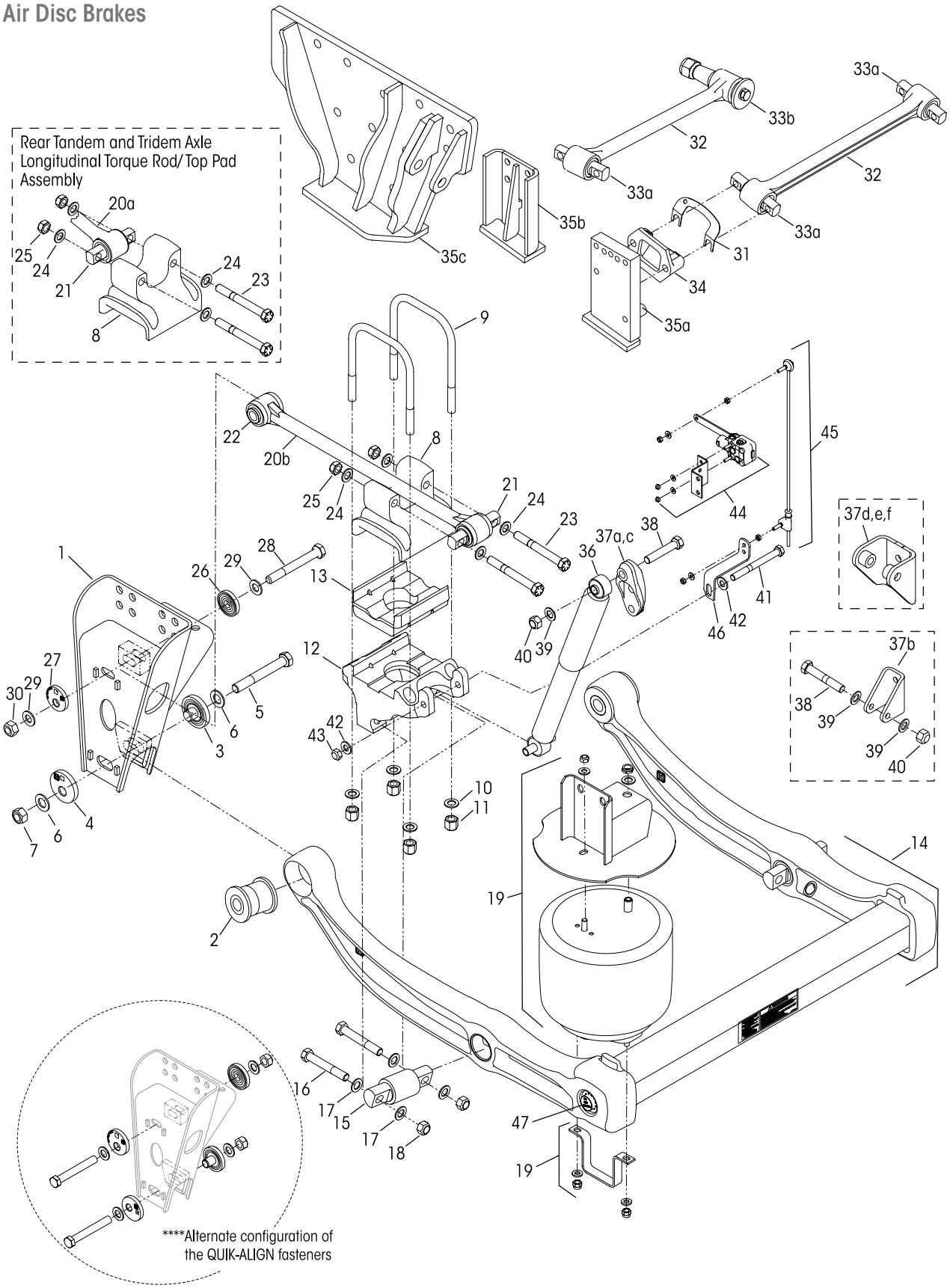

KEY NO.	PART NO.	DESCRIPTION	VEHICLE QTY.
1		Frame Hanger	4
	64451-001	Left Hand - Terex/IPI	
	64451-002	Right Hand - Terex/IPI	
	64451-003	Left Hand - Oshkosh	
	64451-004	Right Hand - Oshkosh	
	60632-022	**QUIK-ALIGN Pivot Bushing & Torque Rod Service Kit, Axle Set,** Includes Key Nos. 2-7, 26-30, 48	
	60632-023	**QUIK-ALIGN Collar Service Kit, One Wheel End,** Includes Key Nos. 3-7	
	60632-018	**QUIK-ALIGN Fastener Service Kit, One Wheel End,** Includes Key Nos. 5-7	
2		*QUIK-ALIGN Pivot Bushing	4
3		*Support Beam QUIK-ALIGN Concentric Collar	4
4		*Support Beam QUIK-ALIGN Eccentric Collar	4
5		*1"-14 UNF-2A x 7½" H-Coat Hex Bolt	4
6		*1" H-Coat Flat Washer	8
7		*1"-14 UNF-2B H-Coat Locknut	4
8		Top Pad, *See illustration on Page 12*	4
		U-bolt Service Kit, One Wheel End	
	48718-120	14⅜"-15½" Ride Height, Includes Key Nos. 9a,b, 10-11	
	48718-121	12½" Ride Height, Includes Key Nos. 9c,d, 10-11	
9		*¾" Square U-bolt	8
a		10", Outboard 14⅜"-15½" Ride Height	
b		10½", Inboard 14⅜"-15½" Ride Height	
c		11½", Outboard 12½" Ride Height	
d		12", Inboard 12½" Ride Height	
10		*¾" Flat Washer	16
11		*¾"-16 UNF U-bolt Locknut	16
12		Bottom Cap - Front and Rear *See Selection Guide on Page 12*	4
13		Axle Spacer - Front and Rear *See Selection Guide on Page 12*	4
14		U-beam Assembly, Includes Key Nos. 2,15	2
		• Front	
	67249-006	34.0" Frame Width	
	67249-014	34.3" Frame Width	
	67249-016	34.5" Frame Width	
	67249-026	34.8" Frame Width	
		• Rear	
	67249-005	34.0" Frame Width	
	67249-013	34.3" Frame Width	
	67249-015	34.5" Frame Width	
	67249-025	34.8" Frame Width	
	34013-114	**Single D-pin Bushing Service Kit,** Includes Key Nos. 15-18	
15		*D-pin Bushing	4
	56659-010	**D-pin Fastener Service Kit, Axle Set** Includes Key Nos. 16-18	
16		*⅞"-14 UNF x 5" Bolt	8
17		*⅞" Flat Washer	16
18		*⅞"-14 UNF Locknut	8
19		Air Spring Assembly, *Configuration may vary per suspension capacity, See Selection Guide on Page 14*	4
20		Longitudinal Torque Rod Assembly	4
a	65285-620	Rear Tandem Axle	
b	65285-685	Front Tandem and Single Axle	
21	69210-000L	Torque Rod Bushing - Straddle	4
22	47692-000	Torque Rod Bushing - Thru Hole	4
	49176-024	**Longitudinal Torque Rod Fastener Kit, Axle Set,** Includes Key No. 23-25	
23		*¾"-16 UNF x 6" Hex Bolt	8

KEY NO.	PART NO.	DESCRIPTION	VEHICLE QTY.
24		*¾" Flat Washer	16
25		*¾"-16 UNF Locknut	8
	58821-011	**Torque Rod QUIK-ALIGN Collar Bolt Service Kit, One Wheel End,** Includes Key Nos. 26-30	
26		*Torque Rod QUIK-ALIGN Concentric Collar	4
27		*Torque Rod QUIK-ALIGN Eccentric Collar	4
28		*⅞"-9 UNC x 7½" Hex Bolt	4
29		*⅞" H-Coat Flat Washer	8
30		*⅞"-9 UNC H-Coat Locknut	4
31	49689-000L	Shim	As Req.
32		**Transverse Torque Rod Assembly, Includes Bushing	2
	62250-515	Terex Advance Mixer Vehicles	
	62000-620	Oshkosh Truck Vehicles	
	62000-630	Oshkosh Truck Vehicles	
33 a	47691-000L	Straddle Torque Rod Bushing	
b	64809-000L	Taper Pin Bushing, Includes Fasteners	
34	22186-000	Transverse Torque Rod Frame Bracket	2
35		Axle Stop, Frame Mounted	4
a	64696-002	RH Rear - Oshkosh	
a	64696-003	LH Front - Oshkosh	
b	64692-001	LH Rear - Indiana Phoenix, Oshkosh	
b	64692-004	RH Front- Oshkosh	
b	64692-006	RH Front- Indiana Phoenix	
c	77773-001	RH Rear - Oshkosh, *not interchangeable w/35a,b*	
c	77773-002	LH Front - Oshkosh, *not interchangeable w/35a,b*	
36		Shock Absorber	4
a	60665-013L	For vehicles with Drum Brakes Only	
b	60665-015	For vehicles with Disc Brakes Only	
c	68069-002	FIREMAAX EX 31K•62K - Old Setup	
d	70807-002	FIREMAAX EX, (Not Shown) *New and retrofitted models, not interchangeable with 36a,b,c*	
37		Upper Shock Frame Bracket	4
a	67463-002	Standard Cast	
b	59423-001	Standard Fabricated Clevis	
c	59423-002	FIREMAAX EX 31K•62K, *use with 36c*	
d	78250-002	High Strength Cast, *use with 36d*	
e	78896-001	High Strength Clevis, High Mount, *use with 36d*	
f	78896-002	High Strength Clevis, Low Mount, *use with 36d*	
		Shock Absorber Fastener Service Kit	
	50754-036	One Wheel End, Includes Key Nos. 38a, 39-43	
	50754-056	One Wheel End, Includes Key Nos. 38b, 39-43	
	50754-050	One Wheel End, Includes Key Nos. 38c, 39-43	
38		*¾"-10 UNC Upper Shock Bolt	4
a		4¼", For use with 37a,b,c	
b		5", For use with 37d	
c		6½", For use with 37e,f	
39		*¾" Flat Washer	As Req.
40		*¾"-10 UNC Locknut	4
41		*⅝"-11 UNC x 7" Lower Shock Bolt	4
42		*⅝" Flat Washer	8
43		*⅝"-11 UNC-2B Locknut	4
	58525-019	**Height Control Valve Assembly Service Kit,** Includes Key Nos. 44, 45a, 46	
44	57977-000	Height Control Valve Assembly	As Req.
45		HCV Linkage Assembly	1
a	58994-005L	14.84" Length	
b	58994-029	20.24" Length	
46		*Height Control Valve Linkage Bracket	As Req.
47	69565-001	**U-beam Assembly Enhancement Aftermarket Service Kit, Axle Set,** *See Page 15 for contents*	
48	70867-001	P-80 Lubricant - 10 ml (Not Shown)	per Bushing 1
Not Shown	30272-000	Pressure Protection Valve, E-One Fire/Rescue Vehicles Only	1

PRIMAAX 230 • 460 • 690 | FIREMAAX 240 • 480

8½" – 10" Ride Height

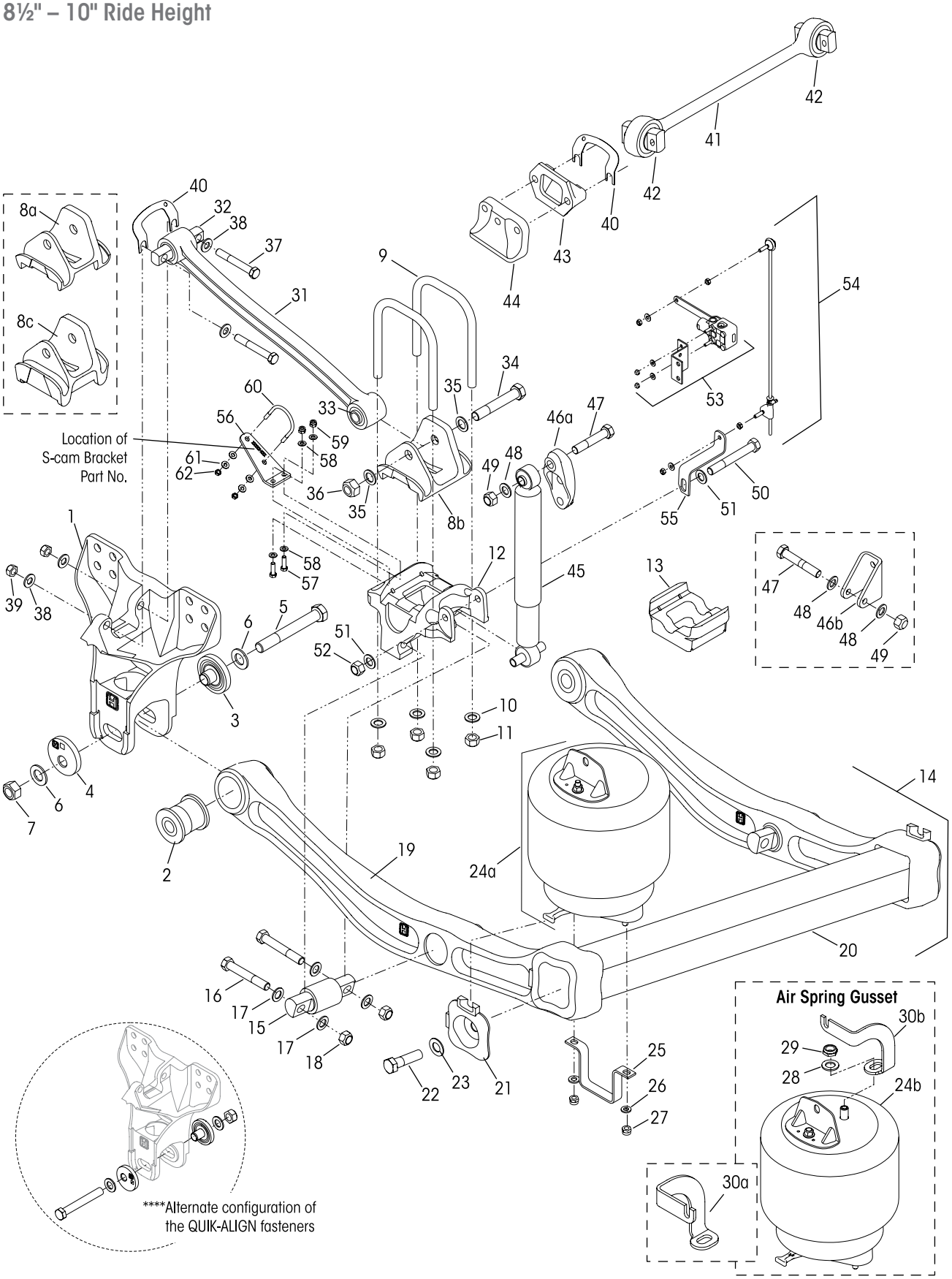

KEY NO.	PART NO.	DESCRIPTION	VEHICLE QTY.
1	60821-001	Frame Hanger	4
		QUIK-ALIGN Pivot Bushing Service Kit, Includes Key Nos. 2-7, 63	
	60961-720	One Wheel End	
	60632-020	Axle Set	
		QUIK-ALIGN Collar Service Kit, Includes Key Nos. 3-7	
	60632-019	One Wheel End, *Replaces 60632-006*	
	60632-021	Axle Set	
	60632-018	**QUIK-ALIGN Fastener Service Kit, One Wheel End,** Includes Key Nos. 5-7, *Replaces 60632-005*	
2		*QUIK-ALIGN Pivot Bushing	4
3		*QUIK-ALIGN Concentric Collar	4
4		*QUIK-ALIGN Eccentric Collar	4
5		*1"-14 UNF-2A x 7½" H-Coat Hex Bolt	4
6		*1" H-Coat Flat Washer	8
7		*1"-14 UNF-2B H-Coat Locknut	4
8 a	60877-001	Top Pad – Meritor Axle, *Replaces 60877-000*	4
b	60877-001	Top Pad – Dana Axle	4
c	65641-000	Top Pad – Disc Brake Applications	4
		U-bolt Service Kit, One Wheel End	
	48718-108	Includes Key Nos. 9a-11	
	48718-125	Includes Key Nos. 9b-11	
	48718-126	Includes Key Nos. 9c-11	
	48718-132	Includes Key Nos. 9d-11	
9		*¾" Square U-bolt	8
a		8⅞" Length, 10" Ride Ht, *use with 8a,8b*	
b		10⅜" Length, 8½" Ride Ht, *use with 8a,8b,13*	
c		9⅞" Length, 10" Ride Ht, *use with 8c*	
d		11⅜" Length, 8½" Ride Ht, *use with 8c,13*	
10		*¾" Flat Washer	16
11		*¾"-16 UNF U-bolt Locknut	16
12	60556-XXX	Bottom Cap, *See Selection Guide on Page 11*	4
13	65139-003	Axle Spacer - 8½" Ride Ht.	4
14	60961-XXX	U-beam Assembly, Includes Key Nos. 2, 15 *(Replaces previous U-beam assembly, support beam and cross tube assembly, see replacement guide on Page 34)*	2
		Single D-pin Bushing Service Kit,	
	34013-117	Includes Key Nos. 15, 16a, 17-18	
	34013-107	Includes Key Nos. 15, 16b, 17-18	
	34013-201	Includes Key Nos. 15, 16c, 17-18	
	34013-116	Includes Key Nos. 15, 16d, 17-18	
15		*D-pin Bushing	4
		D-pin Fastener Service Kit, Axle Set,	
	56659-012	Includes Key Nos. 16a, 17-18	
	56659-009	Includes Key Nos. 16b, 17-18	
	56659-014	Includes Key Nos. 16c, 17-18	
	56659-013	Includes Key Nos. 16d, 17-18	
16		*¾"-16 UNF Bolt	8
a		4¾" Length	
b		5" Length	
c		5¼" Length	
d		5½" Length	
17		*¾" Flat Washer	16
18		*¾"-16 UNF Locknut	8
19		***Support Beam Assembly *(66435-XXX, see Replacement Guide on Page 34)*	
20		***Cross Tube *(60912-001, see Replacement Guide on Page 34)*	
	46772-001	**End Cap and Fastener Kit, Axle Set,** Includes Key Nos. 21-23	
21		*End Cap	4
22		*⅞"-9 UNC x 3½" Hex Bolt	4
23		*⅞" H-Coat Flat Washer	4
		Single Air Spring Service Kit,	
	60961-062	PRIMAAX, Includes Key Nos. 24a, 25-27	
	60961-126	FIREMAAX, Includes Key Nos. 24b, 25-29	

KEY NO.	PART NO.	DESCRIPTION	VEHICLE QTY.
24		Air Spring Assembly with Upper Frame Bracket	4
a	60271-002L	PRIMAAX	
b	65183-002L	FIREMAAX	
25	60911-000	Lower Air Spring Mounting Bracket	4
		Air Spring Fastener Service Kits, Single	
	49177-006	Lower, Includes Key Nos. 26-27	
	49177-024	Upper/Lower, Includes Key Nos. 26-29	
26		*½" Flat Washer	8
27		*½"-13 UNC Locknut	8
28		*¾" Flat Washer	4
29		*¾"-16 UNF Locknut	4
30 a	59479-003	Air Spring Gusset (if equipped)	2
b	59479-004	Air Spring Gusset (if equipped)	2
31		Longitudinal Torque Rod Assembly, *See Selection Guide on Page 11*, Includes Key Nos. 32-33	4
32	69210-000L	Bushing - Straddle Bar Pin - ¾" Holes	4
33	47692-000L	Torque Rod Bushing - Thru Holes	4
		Longitudinal Torque Rod Fastener Kit	
	49176-008	**Axle Set,** Includes Key Nos. 34-39	
	58821-012	**Single,** Thru Bolt Connection, Includes Key Nos. 34-36	
34		*⅞"-14 UNF-2A x 5½" Hex Bolt	4
35		*⅞" H-Coat Flat Washer	8
36		*⅞"-14 UNF-2B Locknut	4
37		*¾"-16 UNF-2A x 3¾" Hex Bolt	8
38		*¾" Flat Washer	16
39		*¾"-16 UNF-2B Locknut	8
40	49689-000L	Shim	As Req.
41	72000-XXXS	**ULTRA ROD PLUS Transverse Torque Rod Assembly, Includes Bushings, Specify length in mm	2
42	64400-002L	Bushing - Straddle Bar Pin (⅝" Holes)	4
43	22186-000	Transverse Torque Rod Frame Bracket	2
44	60593-000L	Axle Stop, Frame Mounted	4
45		Shock Absorber	4
	60657-003L	Standard	
	60665-014	FIREMAAX Disc Brake Applications	
	60665-018L	FIREMAAX Drum Brake Applications	
46		Upper Shock Frame Bracket	4
a	67463-002	Standard, *Replaces 65000-002*	
b	59423-001	FIREMAAX	
	50754-030	**Single Shock Fastener Service Kit,** Includes Key Nos. 47-52	
47		*¾"-10 UNC x 4¼" Upper Shock Bolt	4
48		*¾" Flat Washer	As Req.
49		*¾"-10 UNC Locknut	4
50		*⅝"-11 UNC x 6" Lower Shock Bolt	4
51		*⅝" Flat Washer	8
52		*⅝"-11 UNC-2B Locknut	4
	58525-019	**Height Control Valve Assembly Service Kit,** Includes Key Nos. 53-55	
53	57977-000	HCV Assembly	1
54	58994-005L	HCV Linkage Assembly 14.84" Length	1
55		*Height Control Valve Linkage Bracket	1
56	64508-XXX	S-cam Support Bracket *Locate part number on component*	4
	58821-017	**S-cam Fastener Service Kit, Axle Set,** Includes Key Nos. 57-62	
57		*⅜"-16 UNC x 1¼" Hex Bolt	8
58		*⅜" Hardened Washer	16
59		*⅜"-16 UNC Locknut	8
60		*5/16" S-cam U-bolt	4
61		*5/16" Hardened Washer	16
62		*5/16"-18 UNC Locknut	8
63	70867-001	P-80 Lubricant - 10 ml (Not Shown)	per Bushing 1

PRIMAAX 230 T • 460 T • 690 T | FIREMAAX 240 T • 480 T

T – designates Tall Ride Height 12½" – 14⅜" – 15½"

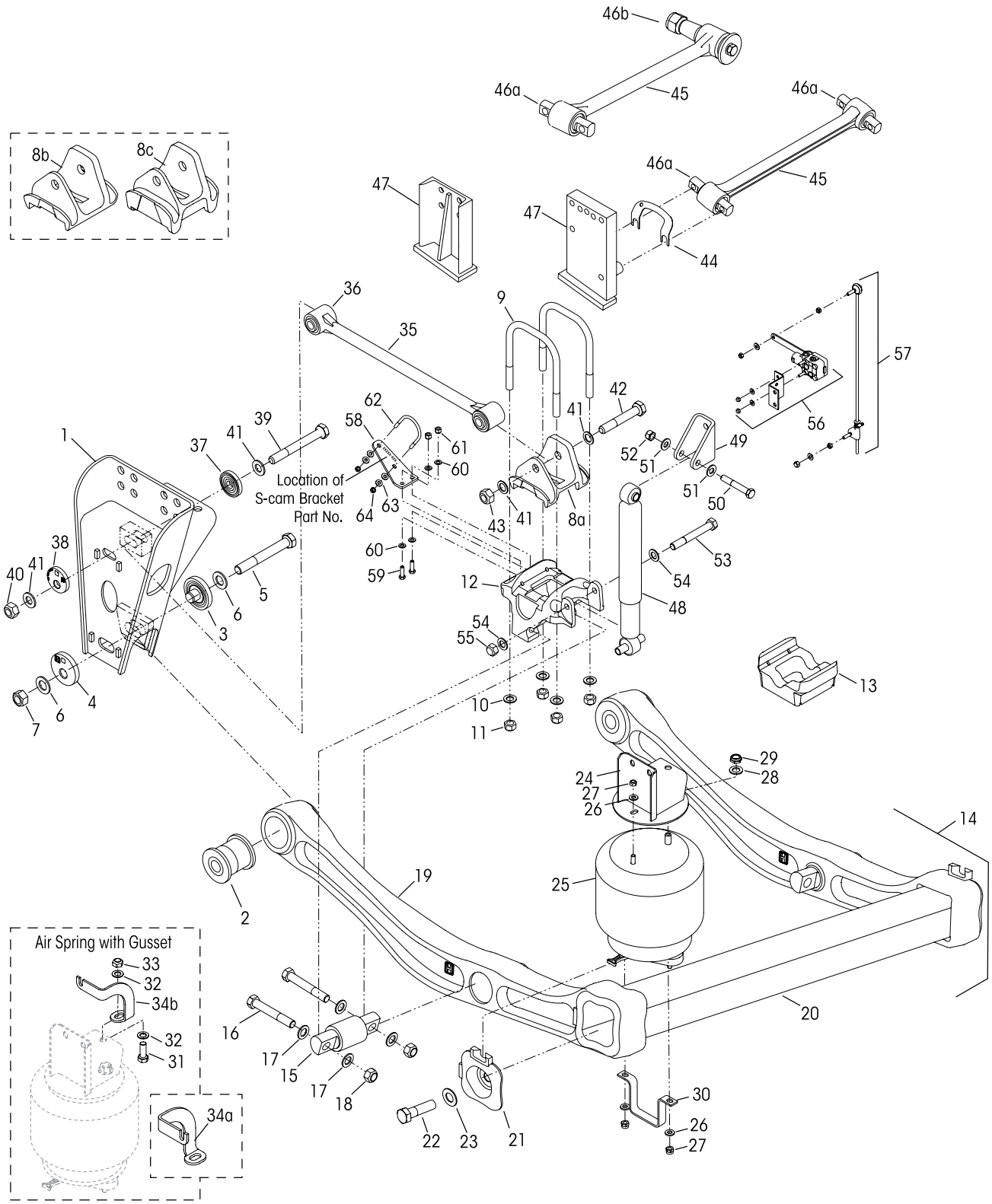

KEY NO.		PART NO.	DESCRIPTION	VEHICLE QTY.
1			Frame Hanger	4
		64451-001	LH - Terex/IPI	
		64451-002	RH - Terex/IPI	
		64451-003	LH - Oshkosh, *Replaces 64451-001*	
		64451-004	RH - Oshkosh, *Replaces 64451-002*	
		60632-022	**QUIK-ALIGN Pivot Bushing & Torque Rod Service Kit, Axle Set,** *Replaces 60632-009* Includes Key Nos. 2-7, 39-43, 65	
		60632-023	**QUIK-ALIGN Collar Service Kit, One Wheel End,** *Replaces 60632-007*, Includes Key Nos. 2-7	
		60632-018	**QUIK-ALIGN Fastener Service Kit, One Wheel End**, Includes Key Nos. 5-7, *Replaces 60632-005*	
2			*QUIK-ALIGN Pivot Bushing	4
3			*Support Beam QUIK-ALIGN Concentric Collar	4
4			*Support Beam QUIK-ALIGN Eccentric Collar	4
5			*1"-14 UNF-2A x 7½" H-Coat Hex Bolt	4
6			*1" H-Coat Flat Washer	8
7			*1"-14 UNF-2B H-Coat Locknut	4
8	a	60877-001	Top Pad - Meritor Axle, *Replaces 60877-000*	4
	b	60877-001	Top Pad - Dana Axle	4
	c	65641-000	Top Pad - Disc Brake Applications	4
			U-bolt Service Kit, One Wheel End,	
		48718-108	Includes Key Nos. 8a-10	
		48718-125	Includes Key Nos. 8b-10	
		48718-126	Includes Key Nos. 8c-10	
		48718-132	Includes Key Nos. 8d-10	
9			*¾" Square U-bolt	8
	a		8⅞" Length, 10" Ride Ht, *use with 8a,8b*	
	b		10⅜" Length, 8½" Ride Ht, *use with 8a,8b,13*	
	c		9⅞" Length, 10" Ride Ht, *use with 8c*	
	d		11⅜" Length, 8½" Ride Ht, *use with 8c,13*	
10			*¾" Flat Washer	16
11			*¾"-16 UNF U-bolt Locknut	16
12		60556-XXX	Bottom Cap, *See Page 11 for part no. location*	4
13		65139-003	Axle Spacer – 12½" Ride Height	4
14		60961-XXX	U-beam Assembly, Includes Key Nos. 2,15 *(Replaces the previous support beam and cross tube assembly, see replacement guide on Page 34)*	2
			Single D-pin Bushing Service Kit,	
		34013-107	Includes Key Nos. 15, 16a, 17-18	
		34013-116	Includes Key Nos. 15, 16b, 17-18	
		34013-117	Includes Key Nos. 15, 16c, 17-18	
15			*D-pin Bushing	4
			D-pin Fastener Service Kit, Axle Set,	
		56659-009	Includes Key Nos. 16a, 17-18	
		56659-013	Includes Key Nos. 16b, 17-18	
		56659-012	Includes Key Nos. 16c, 17-18	
16			*¾"-16 UNF Bolt	8
	a		Length 5"	
	b		Length 5½"	
	c		Length 4¾"	
17			*¾" Flat Washer	16
18			*¾"-16 UNF Locknut	8
19			***Support Beam Assembly *(66435-XXX, see Replacement Guide on Page 34)*	
20			***Cross Tube *(60912-XXX, see Replacement Guide on Page 34)*	
		46772-001	**End Cap and Fastener Kit, Axle Set,** Includes Key Nos. 21-23	
21			*End Cap	4
22			*⅞"-9 UNC x 3½" Hex Bolt	4
23			*⅞" H-Coat Flat Washer	4
24		65031-001	Upper Air Spring Bracket Ass'y - 14⅜" Ride Ht.	4
		65031-002	Upper Air Spring Bracket Ass'y - 15½" Ride Ht.	4
			Single Air Spring Service Kit,	
		60961-124	PRIMAAX, Includes Key Nos. 25-30	
		60961-125	FIREMAAX, Includes Key Nos.25-33	
25		65032-002	Air Spring	4
			Air Spring Fastener Service Kits, Single	
		49177-006	Lower, Includes Key Nos. 26-27	
		49177-023	Upper/Lower, Includes Key Nos. 26-29	
		49177-025	FIREMAAX, Includes Key Nos. 26-29, 31-33	
26			*½" Flat Washer	12
27			*½"-13 UNC Locknut	12
28			*¾" Flat Washer	4
29			*¾"-16 UNF Locknut	4
30		60911-000	Lower Air Spring Mounting Bracket	4
31			*¾"-10 UNC x 2" Bolt	4
32			*¾" Flat Washer	8
33			*¾"-10 UNC Locknut	4
34	a	59479-003	Air Spring Gusset (if equipped)	2
	b	59479-004	Air Spring Gusset (if equipped)	2
35			Longitudinal Torque Rod Assembly	4
		60641-640	Front, Includes Bushings	
		60641-660	Rear, Includes Bushings	
36		47692-000L	Torque Rod Bushing - Thru Holes	8
		58821-011	**Torque Rod QUIK-ALIGN Collar Bolt Service Kit, Per Wheel End,** Includes Key Nos. 37-41	
		58821-012	**Single Longitudinal Torque Rod Fastener Kit,** Thru Bolt Connection, Includes Key Nos. 41-43	
37			*Torque Rod QUIK-ALIGN Concentric Collar	4
38			*Torque Rod QUIK-ALIGN Eccentric Collar	4
39			*⅞"-9 UNC x 7½" Hex Bolt	4
40			*⅞"-9 UNC H-Coat Locknut	4
41			*⅞" H-Coat Flat Washer	16
42			*⅞"-14 UNF x 5½" Hex Bolt	4
43			*⅞"-14 UNF Locknut	4
44		49689-000L	Shim	As Req.
45			**Transverse Torque Rod Assembly, Includes Bushing	2
		62250-515	Terex Advance Mixer Vehicles	
		62000-620	Oshkosh Truck Vehicles	
46	a	47691-000L	Straddle Torque Rod Bushing	
	b	64809-000L	Taper Pin Bushing with Fasteners	
47			Axle Stop, Frame Mounted	1
		64692-001	Left Hand Rear - Indiana Phoenix	
		64696-002	Right Hand Rear - Oshkosh	
		64696-003	Left Hand Front - Oshkosh	
		64692-004	Right Hand Front - Oshkosh	
		64692-006	Right Hand Front - Indiana Phoenix	
48		60665-011	Shock Absorber	4
49		59423-001	Upper Shock Frame Bracket	4
		50754-030	**Single Shock Fastener Service Kit,** Includes Key Nos. 50-55	
50			*¾"-10 UNC x 4¼" Upper Shock Bolt	4
51			*¾" Flat Washer	8
52			*¾"-10 UNC Locknut	4
53			*⅝"-11 UNC x 6" Lower Shock Bolt	4
54			*⅝" Flat Washer	8
55			*⅝"-11 UNC Locknut	4
		58525-020	**Height Control Valve Assembly Service Kit,** Includes Key Nos. 56-57a	
56		57977-000	Height Control Valve Assembly	1
57			HCV Linkage Assembly	1
	a	58994-015	8.27" Length	
	b	58994-005L	14.84" Length	
	c	58994-029	20.24" Length	
58		64508-XXX	S-cam Support Bracket, *Locate part number on component*	4
		58821-017	**S-cam Fastener Service Kit, Axle Set,** Includes Key Nos. 59-64	
59			*⅜"-16 UNC x 1¼" Hex Bolt	8
60			*⅜" Hardened Washer	16
61			*⅜"-16 UNC Locknut	8
62			*5/16" S-cam U-bolt	4
63			*5/16" Hardened Washer	16
64			*5/16"-18 UNC Locknut	8
65		70867-001	P-80 Lubricant - 10 ml (Not Shown)	per Bushing 1

PRIMAAX 260 • 520 • 780 | FIREMAAX 270 • 540

8½" – 10" Ride Height

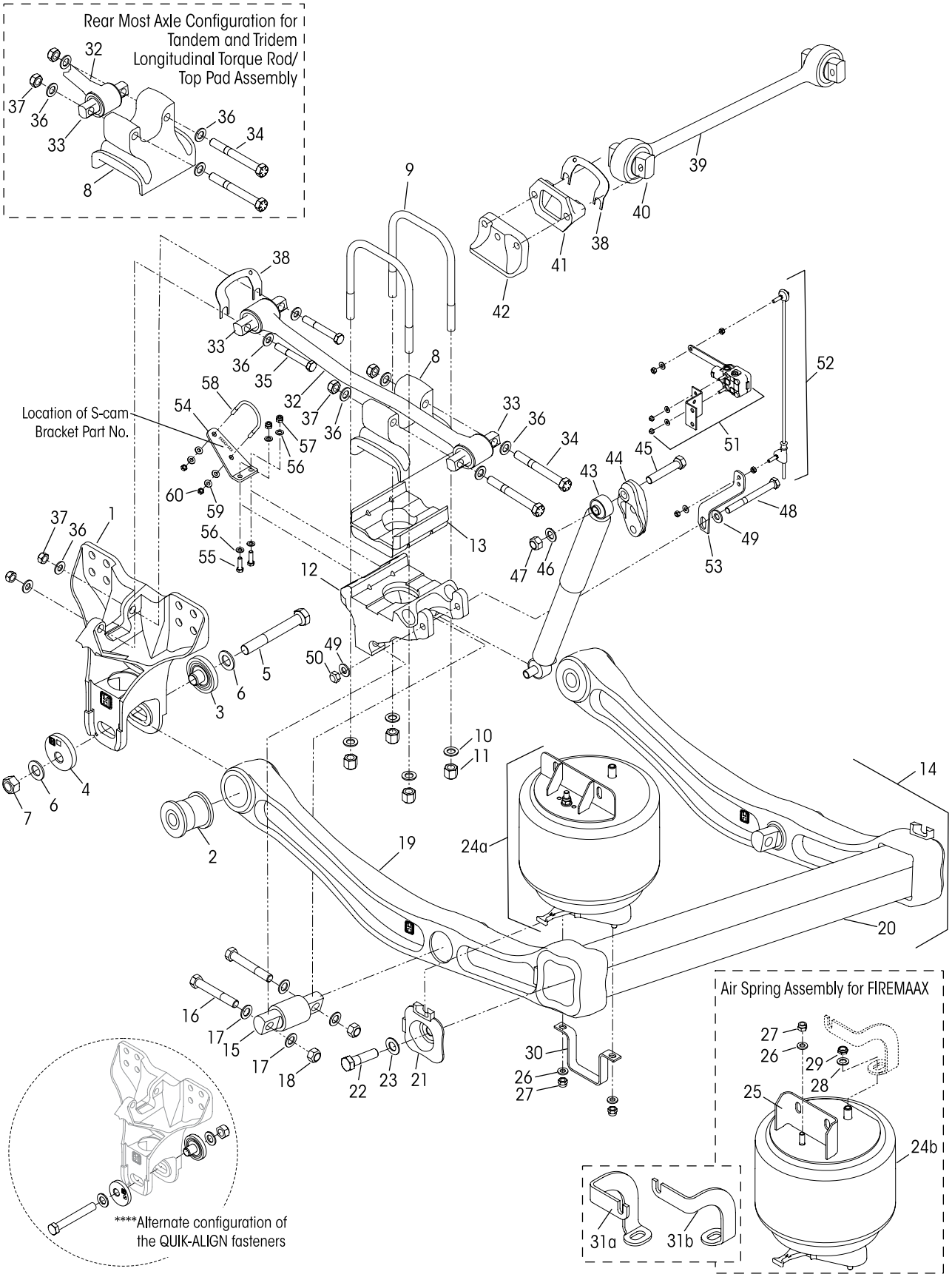

KEY NO.	PART NO.	DESCRIPTION	VEHICLE QTY.
1	60821-001	Frame Hanger	4
		QUIK-ALIGN Pivot Bushing Service Kit, Includes Key Nos. 2-7, 61	
	60961-720	One Wheel End	
	60632-020	Axle Set	
		QUIK-ALIGN Collar Service Kit, Includes Key Nos. 3-7	
	60632-019	One Wheel End, *Replaces 60632-006*	
	60632-021	Axle Set	
	60632-018	**QUIK-ALIGN Fastener Service Kit, One Wheel End,** Includes Key Nos. 5-7, *Replaces 60632-005*	
2		*QUIK-ALIGN Pivot Bushing	4
3		*QUIK-ALIGN Concentric Collar	4
4		*QUIK-ALIGN Eccentric Collar	4
5		*1"-14 UNF-2A x 7½" H-Coat Hex Bolt	4
6		*1" H-Coat Flat Washer	8
7		*1"-14 UNF-2B H-Coat Locknut	4
8		Top Pad, *See illustration on Page 12*	4
	65210-001	Meritor Straight Side	
	65210-002	Dana Straight Side	
	65210-003	Meritor Transition Side	
	65210-004	Dana Transition Side	
		U-bolt Service Kit, One Wheel End	
	48718-120	Includes Key Nos. 9a, 9b, 10-11	
	48718-118	Includes Key Nos. 9c, 9d, 10-11	
9		*¾" Square U-bolt	8
a		10", Outboard 10" Ride Height	
b		10½", Inboard 10" Ride Height	
c		11½", Outboard 8½" Ride Height	
d		12", Inboard 8½" Ride Height	
10		*¾" Flat Washer	16
11		*¾"-16 UNF U-bolt Locknut	16
12		Bottom Cap - Front and Rear *See Selection Guide on Page 12*	4
13		Axle Spacer, *See Selection Guide on Page 12*	4
14	60961-XXX	U-beam Assembly, Includes Key Nos. 2,15 *(Replaces previous U-beam assembly, support beam and cross tube assembly, see replacement guide on Page 34)*	2
	34013-114	**Single D-pin Bushing Service Kit,** Includes Key Nos. 15-18	
15		*D-pin Bushing	4
	56659-010	**D-pin Fastener Service Kit, Axle Set** Includes Key Nos. 16-18	
16		*⅞"-14 UNF x 5" Bolt	8
17		*⅞" Flat Washer	16
18		*⅞"-14 UNF Locknut	8
19		***Support Beam Assembly *(66435-XXX, see Replacement Guide on Page 34)*	
20		***Cross Tube *(60912-XXX, see Replacement Guide on Page 34)*	
	46772-001	**End Cap and Fastener Kit, Axle Set,** Includes Key Nos. 21-23	
21		*End Cap	4
22		*⅞"-9 UNC x 3½" Hex Bolt	4
23		*⅞" H-Coat Flat Washer	4
		Single Air Spring Service Kit,	
	60961-118	PRIMAAX, Includes Key Nos. 24a, 26-30	
	60961-119	FIREMAAX, Includes Key Nos. 24b, 25-30	
24		Air Spring Assembly	4
a	66255-002	PRIMAAX with Upper Frame Bracket	
b	69153-002	FIREMAAX, Air Spring Only, *Replaces 65282-002*	

KEY NO.	PART NO.	DESCRIPTION	VEHICLE QTY.
25	65868-000	Upper Air Spring Frame Bracket for FIREMAAX	4
		Air Spring Fastener Service Kits, Single	
	49177-006	Lower, Includes Key Nos. 26-27	
	49177-023	Upper/Lower, Includes Key Nos. 26-29	
26		*½" Flat Washer	12
27		*½"-13 UNC Locknut	12
28		*¾" Flat Washer	4
29		*¾"-16 UNF Locknut	4
30	60911-000	Lower Air Spring Mounting Bracket	4
31 a	59479-003	Air Spring Gusset (if equipped)	2
b	59479-004	Air Spring Gusset (if equipped)	2
32		Longitudinal Torque Rod Assembly *See Selection Guide on Page 13*	4
33	69210-000L	Bushing - Straddle Bar Pin (¾" Holes)	8
	49176-017	**Longitudinal Torque Rod Fastener Kit, Axle Set** Includes Key No. 31-34	
34		*¾"-16 UNF 6" Hex Bolt	8
35		*¾"-16 UNF 3¾" Hex Bolt	8
36		*¾" Flat Washer	32
37		*¾"-16 UNF Locknut	16
38	49689-000L	Shim	As Req.
39	72000-XXXS	**ULTRA ROD PLUS Transverse Torque Rod Assembly, Includes Key No. 40, Specify length in mm	2
40	64400-002L	Bushing - Straddle Bar Pin - ⅝" Holes	4
41	22186-000	Transverse Torque Rod Frame Bracket	2
42	60593-000L	Axle Stop, Frame Mounted	4
43		Shock Absorber	4
	60665-013L	For vehicles with Drum Brakes only	
	60665-015	For vehicles with Disc Brakes only	
44	67463-002	Upper Shock Frame Bracket, *Replaces 65000-002*	4
	50754-029	**Single Shock Fastener Service Kit,** Includes Key Nos. 45-50	
45		*¾"-10 UNC x 4¼" Upper Shock Bolt	4
46		*¾" Flat Washer	4
47		*¾"-10 UNC Locknut	4
48		*⅝"-11 UNC x 7" Lower Shock Bolt	4
49		*⅝" Flat Washer	8
50		*⅝"-11 UNC Locknut	4
	58525-019	**Height Control Valve Assembly Service Kit,** Includes Key Nos. 51-53	
51	57977-000	Height Control Valve Assembly,	2
52	58994-005L	HCV Linkage Assembly,	2
53		*Height Control Valve Linkage Bracket	2
54	64508-XXX	S-cam Support Bracket *Locate part number on component*	4
	58821-017	**S-cam Fastener Service Kit, Axle Set,** Includes Key Nos. 55-60	
55		*⅜"-16 UNC x 1¼" Hex Bolt	8
56		*⅜" Hardened Washer	16
57		*⅜"-16 UNC Locknut	8
58		*5/16" S-cam U-bolt	4
59		*5/16" Hardened Washer	16
60		*5/16"-18 UNC Locknut	8
61	70867-001	P-80 Lubricant - 10 ml (Not Shown)	per Bushing 1

Support Beam and Cross Tube Replacement Guide

(Built prior to May 2010)

Pages 28, 30, 32
Key Nos. 14, 19, 20

				DISCONTINUED May 2010			NEW
				Support Beam Assembly Part Number		Cross Tube Part Number	U-beam Assembly Service Kit Number
				60831-00X • 66435-00X		60912-XXX	60961-XXX
Vehicle Manufacturer	Ride Height	Drive Axle	Frame Width+	LEFT HAND	RIGHT HAND		
PRIMAAX 230 • 460 • 690 | 230T • 460T • 690T FIREMAAX 240 • 480 | 240T • 480T							
Volvo • Mack	8.5"-10.0"	Forward	33.5"	-003	-004	-005	-237
		Rear		-001	-002		-238
Kenworth • Western Star	8.5"-10.0"	Forward	34.0"	-003	-004	-001	-235
		Rear		-001	-002		-236
Freightliner • Sterling • Autocar	8.5"-10.0"	Forward	34.3"	-003	-004	-003	-241
		Rear		-001	-002		-242
Freightliner • Sterling	8.5"-10.0"	Forward	34.5"	-003	-004	-002	-239
		Rear		-001	-002		-240
International	8.5"-10.0"	Forward	34.3"	-003	-004	-003	-261
		Rear		-001	-002		-262
		Forward	34.5"	-003	-004	-002	-263
		Rear		-001	-002		-264
		Forward	34.8"	-003	-004	-009	-243
		Rear		-001	-002		-244
Fire / Rescue (Except Spartan)	8.5"-10.5"	Forward	34.0"	-003	-004	-001	-267
		Rear		-001	-002		-268
IPI • Advance • Oshkosh • Fire / Rescue	12.5"-15.5"	Forward	34.0" *Fab Hanger*	-003	-004	-001	-247++
		Rear		-001	-002		-248++
PRIMAAX 260 • 520 • 780 | FIREMAAX 270 • 540							
Kenworth • Western Star • Fire / Rescue (Except Spartan)	8.5"-10.0"	Forward	34.0"	-007	-008	-001	-253
		Rear		-005	-006		-254
		+++		-001	-002	-001	-718++
Freightliner	8.5"-10.0"	Forward	34.3"	-007	-008	-003	-257
		Rear		-005	-006		-258
		Forward	34.5"	-007	-008	-002	-255
		Rear		-005	-006		-256
All 12.5"-15.5" suspensions, including Fire / Rescue	12.5"-15.5"	Forward	34.0"	-003	-004	-001	-269++
		Rear		-001	-002		-270++

NOTE:

+ Contact vehicle manufacturer to verify frame width.

++ Upper air spring bracket not included. The original bracket equipped on this vehicle can be used with the new air spring assembly included in the U-beam assembly service kit.

+++ PRIMAAX 260 single axle only, use with Dana S26-190 axle.

SECTION 5
Special Tools

D-PIN / QUIK-ALIGN PIVOT BUSHING SERVICE TOOLS

Hendrickson Part No. 66086-202

OTC Part No. 4246 Visit otctools.com

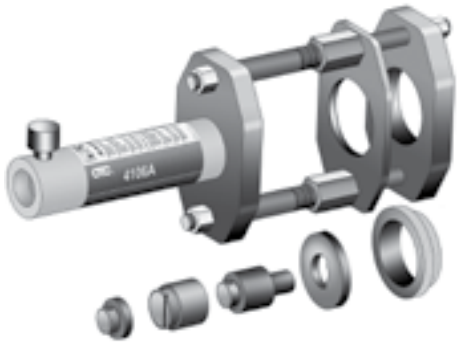

Hendrickson Part No. 66086-204

OTC Part No. 4247 Visit otctools.com

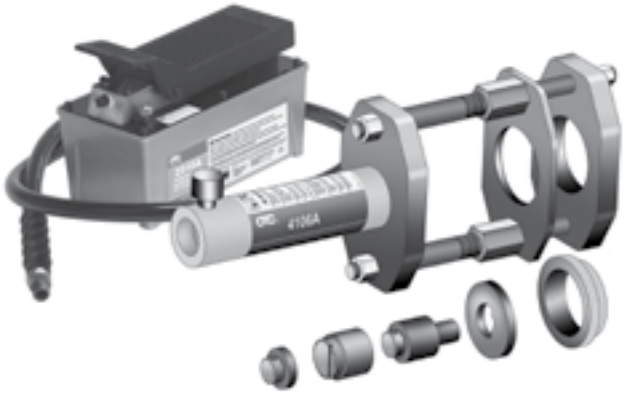

Hendrickson Part No. 66086-205

OTC Part No. 4254 Visit otctools.com

NOTE: In conjunction with Hendrickson Part No. 66086-204 (OTC 4247) this additional adapter tool kit is available to purchase to be used on Hendrickson SOFTEK NXT suspension (not needed for this suspension)

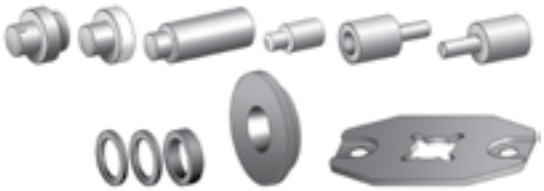

QUIK-ALIGN PIVOT BUSHING SERVICE TOOL

Hendrickson Part No. 66086-203L

Reference Literature No. 59310-061

QUIK-ALIGN SOCKET TOOL

Hendrickson Part No. 66086-200

OTC Part No. 1767

Visit otctools.com

QUIK-WRENCH TOOL

Hendrickson Part No. 66086-201

OTC Part No. 1768

Visit otctools.com

DETACHABLE END CAP USAGE: Use on Hendrickson **PRIMAAX • FIREMAAX** suspensions only for end cap, **NOT FOR USE** on the **PRIMAAX EX • FIREMAAX EX** suspensions. Use to tighten the detachable end cap bolts, as shown in graphic.

- Reduces maintenance time by eliminating the need to remove the tires to gain access to the detachable end cap bolt

NOTE: Due to some vehicle configurations and/or tire sizes wheel removal may be required.

Support Beam with Detachable End Cap

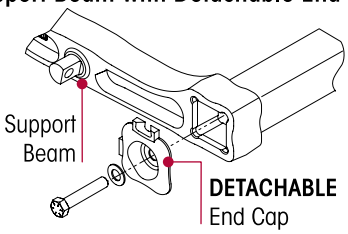

Top Pad

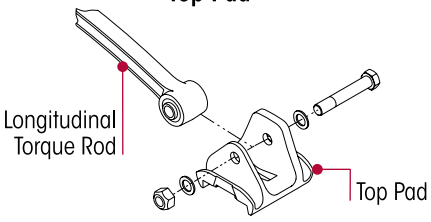

TORQUE ROD BUSHING TOOLS

FUNNEL

Hendrickson Part No. 66086-001L

ULTRA ROD®

Hendrickson Part No. 66086-000L

ULTRA ROD® PLUS™

NOTE: Some torque rods assemblies equipped on the PRIMAAX EX • FIREMAAX EX | PRIMAAX • FIREMAAX suspensions have curled end hubs and **ARE NOT** re-bushable. The entire torque rod assembly must be replaced. This feature provides superior bushing retention in the torque rod end hub. These torque rods can be identified by the part number: 67428-XXX • 67219-XXX • 65302-XXX or the suffix N after any part number (i.e. 62000-615N).

These shop made tools are designed to install and remove torque rod bushings. Bushing tools are made from cold rolled steel or equivalent. Drawings are for reference only. Hendrickson does not supply these tools.

RECEIVING TOOLS

ULTRA ROD

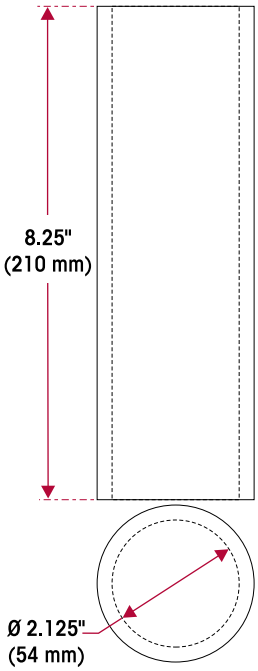

ULTRA ROD PLUS • XTRB

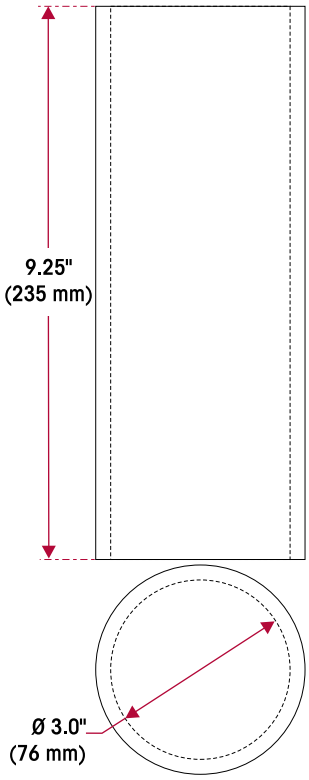

INSTALLATION / REMOVAL TOOLS

ULTRA ROD

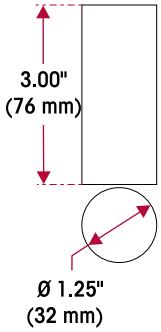

ULTRA ROD PLUS • XTRB

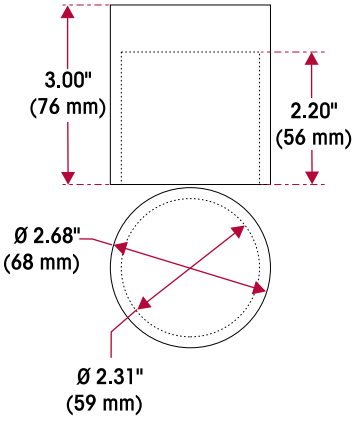

QUIK-ALIGN TOOLS

These shop made tools are designed to service QUIK-ALIGN. These tools are made from cold rolled steel or equivalent. Drawings are for reference only. Hendrickson does not supply these tools.

Pivot Bushing Installer

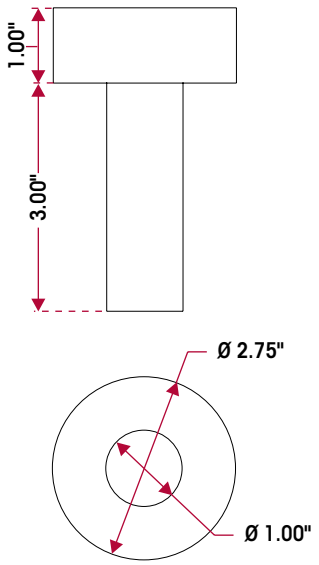

Pivot Bushing Remover

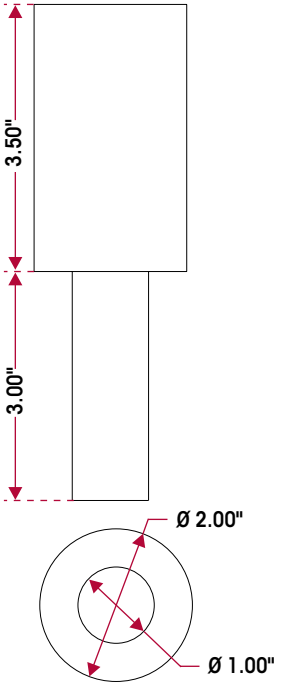

Pivot Bushing Receiver

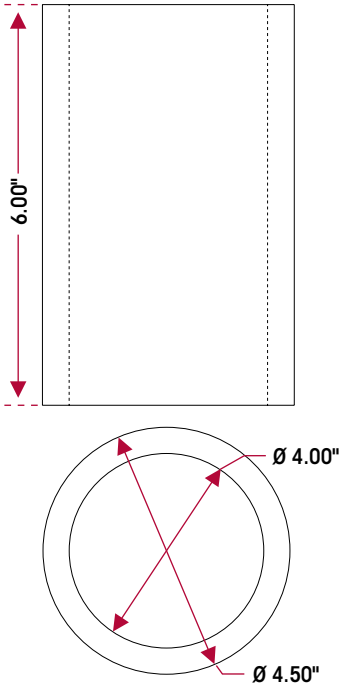

D-PIN TOOLS

These shop made tools are designed to service D-Pin. These tools are made from cold rolled steel or equivalent. Drawings are for reference only. Hendrickson does not supply these tools.

Installer

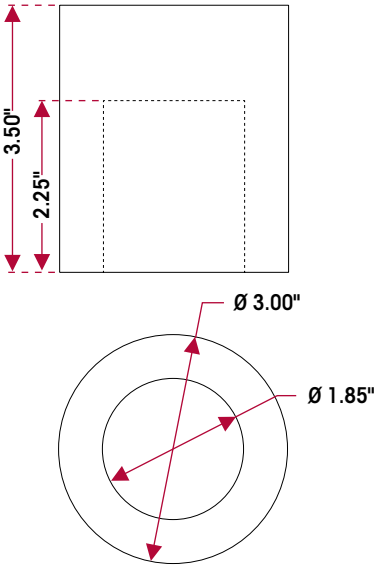

Remover

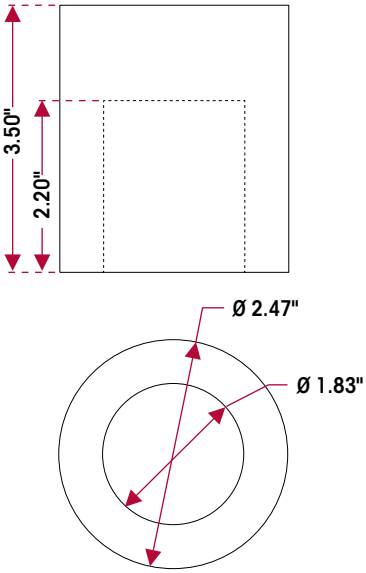

Receiver

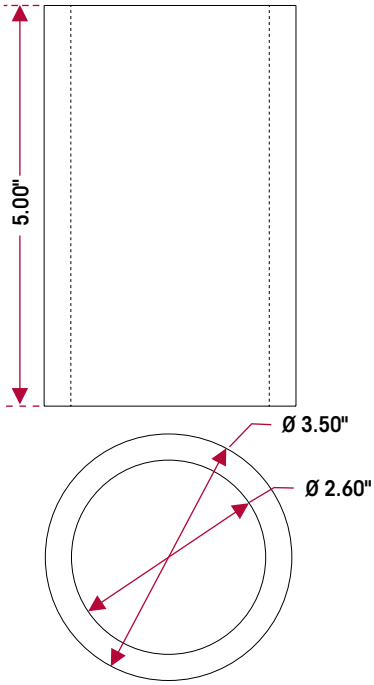

SECTION 6
Preventive Maintenance

Following appropriate inspection procedures is important to help ensure the proper maintenance and operation of the suspension system and component parts function to their highest efficiency. Hendrickson recommends PRIMAAX EX • FIREMAAX EX and PRIMAAX • FIREMAAX heavy-duty rear suspensions be inspected at pre-delivery, the first 1,000 miles of service and at the regular preventive maintenance intervals. Off-highway and severe service operating conditions require more frequent inspections than on-highway service operation.

NOTE Torque values shown in this publication apply only if Hendrickson supplied fasteners are used. If non Hendrickson fasteners are used, follow the torque specification listed in the vehicle manufacturer's service manual.

AREAS OF INSPECTION

- ■ Air springs
- • Air supply and fittings
- • All fasteners
- • Tire wear
- ■ Clamp group: Top pad • U-bolts and locknuts
- ■ U-beam assembly: Cross tube / Support beam / End cap (enhanced or detachable)
- • Frame hanger bracket
- • Height control valve and air lines
- ■ QUIK-ALIGN connections
- • S-cam support tube bracket
- • Shock absorbers
- • Transverse and longitudinal torque rods

■ Signifies performance critical components.

HENDRICKSON RECOMMENDED INSPECTION INTERVALS	PRE-DELIVERY INSPECTION	FIRST IN-SERVICE INSPECTION	PREVENTIVE MAINTENANCE
Visual inspection for proper assembly and function. Check for all of the following and replace components as necessary: • Signs of unusual movement, loose or missing components • Signs of abrasive or adverse contact with other components • Damaged, or cracked parts • Improper suspension function or alignment	Within the first 500 miles (500 km)	Within the first 1,000 miles (1,600 km) or 100 Hours	**OFF-HIGHWAY** Every 6 Months/1,200 Hours or 25,000 miles/ 40,000 km, whichever comes first **ON-HIGHWAY** Every 12 Months or 50,000 miles, whichever comes first
Visually inspect the overall condition of and for any signs of damage to: • U-beam assembly • Air springs and air lines			
Inspect fasteners for proper torque as recommended in the Torque Specification Section of this publication: • QUIK-ALIGN fasteners and Torque rod to top pad fasteners, see Figure 6-1 • Clamp group U-bolt fasteners, see Figure 6-2 • **DO NOT** re-torque Integrated End Cap, see Figure 6-3			Every 12 Months / 2400 Hours
Verify the lateral alignment of the drive axles are within the vehicle manufacturer's tolerances			
Verify ride height. Refer to ride height in the Alignment & Adjustment section of this publication			

See vehicle manufacturer's applicable publications for other preventive maintenance requirements.

NOTE Figures 6-1 through 6-3 illustrate PRIMAAX EX • FIREMAAX EX suspension basic connections.

FIGURE 6-1

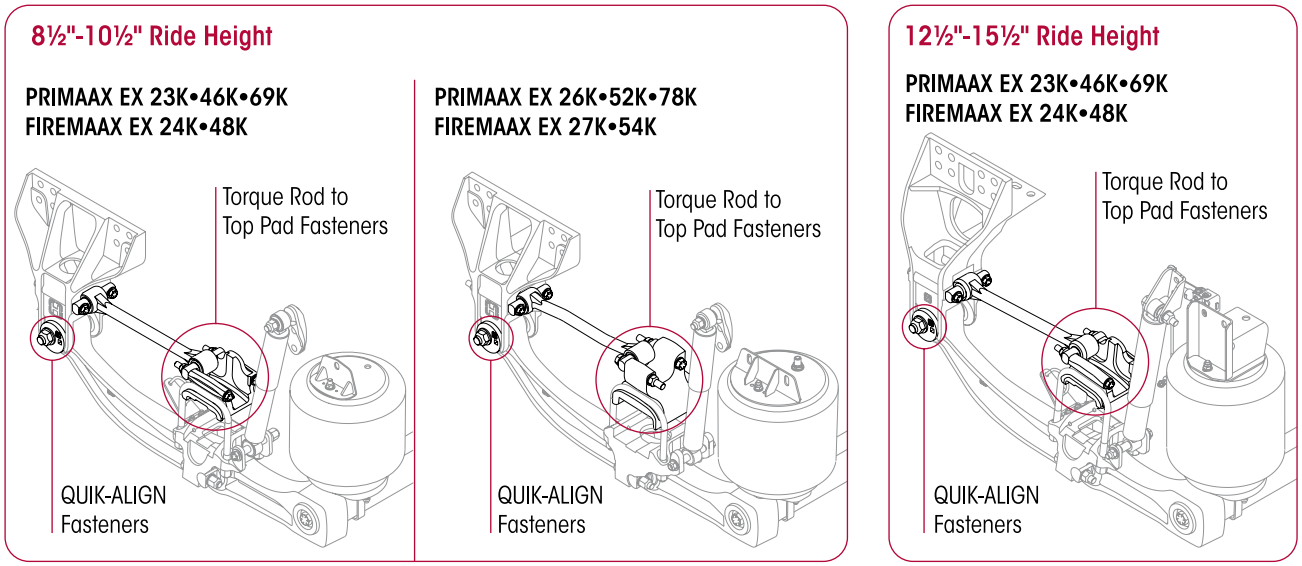

FIGURE 6-2

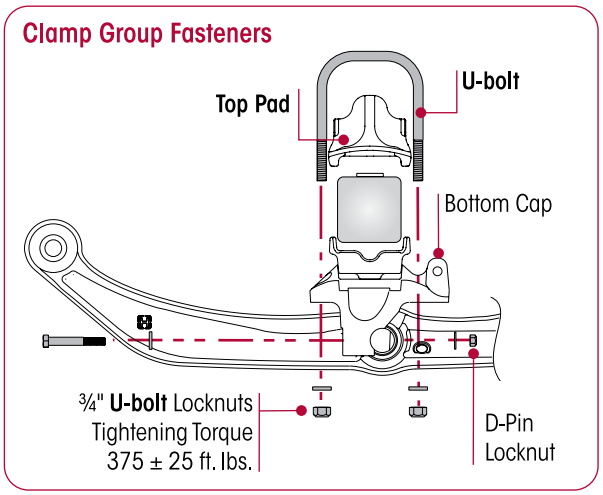

FIGURE 6-3

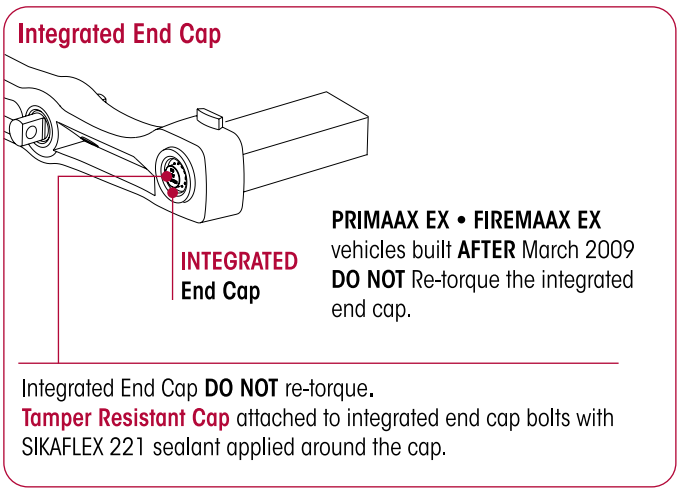

FIGURE 6-4

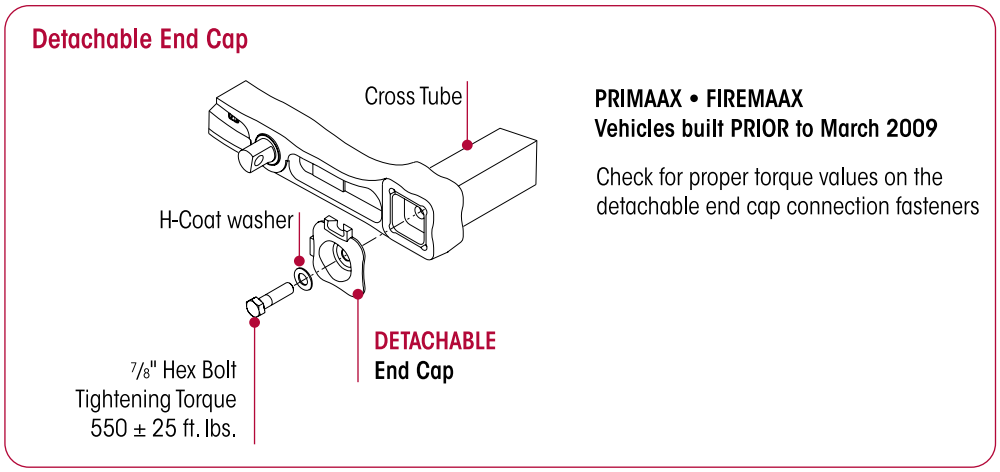

COMPONENT INSPECTION

IMPORTANT NOTE Replace all worn or damaged parts.

- **Air springs** — Visually inspect the outer surface of the air spring for chafing, uneven wear, cracks or any signs of component damage. Ensure that the upper bead plate is tight against the underside of the frame. Check for any lateral slippage at the lower air spring bracket. An 1/8" of slippage in either direction is acceptable. Verify all mounting hardware have the proper torque values maintained. See the Torque Specification Section of this publication for recommended torque requirements.
- **Air supply (Pneumatic components)** — The air supply to the system plays a large role in the air springs' performance. Inspect, clean and replace, if necessary, any support products to the air springs, valves, regulators and air lines. See Air Fitting Inspection in this section if an air leak is suspected.
- **Fasteners** — Visually inspect for any loose or damaged fasteners on the entire suspension. Make sure all fasteners are tightened to a torque value within the specified torque range. See Torque Specification Section in this publication for recommended torque requirements. Use a calibrated torque wrench to check torque in a tightening direction. As soon as the fastener starts to move, record the torque and correct the torque if necessary.
- **Tire wear** — Visually inspect the tires for wear patterns that may indicate suspension damage or misalignment.
- **Clamp group** — Visually inspect for any loose or damaged fasteners. Verify the U-bolt locknuts have the proper torque values maintained. See the U-bolt Locknuts in this section.
- **Cross tube** — Visually inspect for cracks, damage, metal shavings, or looseness at the beam connection.
- **Support beam assembly** — Visually inspect the overall condition of the support beam for dents, dings, or other damage on the outer edges of the beam flanges. Visually inspect the D-pin bushings for tearing or extreme bulging. Check for any metal-to-metal contact in the bushed joints.
- **Frame hanger bracket** — Visually inspect for any signs of loose fasteners, movement, or damage. Verify the frame attaching fasteners have the proper torque values maintained. See the vehicle manufacturer for proper torque specifications.
- **QUIK-ALIGN connection** — Visually inspect the connection for signs of looseness or movement. Visually inspect the bushing for wear. Verify the connections have the proper torque values maintained. See the Torque Specification Section of this publication for recommended torque requirements. See QUIK-ALIGN Fastener Warnings in the Important Safety Notice Section of this publication prior to installing the QUIK-ALIGN connection.
- **Shock absorbers** — Visually inspect for any signs of dents or leakage. Misting is not considered a leak, see Shock Absorber Inspection in this section.
- **Torque rods (longitudinal and transverse)** — All torque rods must be inspected for looseness, torn or shredded rubber, and for proper fastener torque. If there is metal-to-metal contact in the bushing joint, this is a sign of excessive bushing wear and the torque rod needs to be serviced, see Longitudinal and Transverse Torque Rod inspection in this section.
- **Top pad/Longitudinal torque rod connection** — Visually inspect the connection for signs of movement or damage. Use a lever check to help assess movement in this joint, see Longitudinal and Transverse Torque Rods in this section for proper inspection. Verify the top pad/longitudinal torque rod connections have the proper torque values maintained. See the Torque Specifications Section of this publication for recommended torque requirements.
- **Height control valve and Air lines** — Check the suspension air system for air leaks. Check all air lines for proper routing. Check for chafing or pinched air lines. Check the height control valve linkage for damage or interference with peripheral components.
- **Wear and damage** — Visually inspect all parts of the suspension for wear and damage. Look for bent or cracked parts.

- **S-cam support tube bracket** (If equipped) — Visually inspect the bracket for damage and check for any loose or damaged fasteners.
- **End cap** (if equipped) — Visually inspect the end cap connection for signs of movement or damage. Verify the support beam / cross tube connection bolts have the proper torque values maintained. See the Torque Specification Section of this publication for recommended torque requirements.

NOTE

Some torque rods assemblies equipped on the PRIMAAX EX • FIREMAAX EX | PRIMAAX • FIREMAAX suspension have curled end hubs and are not re-bushable. The entire torque rod assembly must be replaced. This feature provides superior bushing retention in the torque rod end hub.

- These torque rods can be identified by the part number **67428**-XXX or the suffix N after any part number (i.e. **62000-615**N)

See vehicle manufacturer's applicable publications for other preventive maintenance requirements.

U-BOLT LOCKNUTS

NOTE

U-bolt clamp group hardware for the PRIMAAX EX • FIREMAAX EX | PRIMAAX • FIREMAAX suspensions are ¾"-16 UNF Grade C locknuts and ¾"-16 UNF Grade 8 U-bolts which are phosphate and oil coated.

1. U-bolt locknuts (see Figure 6-5) must be torqued to specification at preparation for delivery.
2. U-bolt locknuts must be re-torqued at 1,000 miles.
3. Thereafter, follow the inspection and re-torque intervals below:
   - **Off-highway and severe service** – Every 25,000 miles or 6 months, whichever comes first.
   - **100% On-highway** – Every 50,000 miles or 12 months, whichever comes first.

FIGURE 6-5

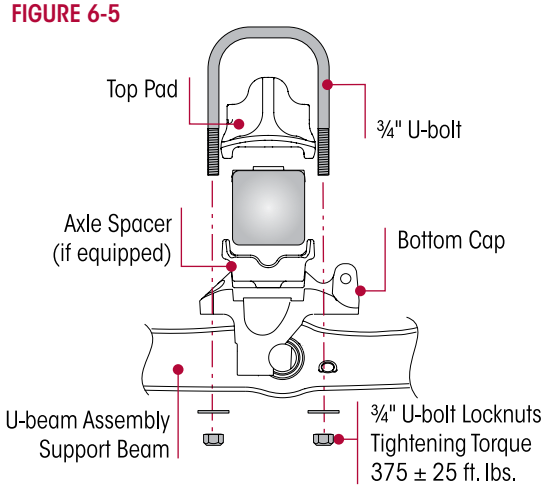

Off-highway and severe service operating conditions require more frequent inspections than on-highway service operation.

SERVICE HINT

Due to certain pinion angle configurations, the removal of the D-Pin bolts may be necessary to access the U-bolt locknuts.

WARNING

IT IS IMPORTANT THAT THE U-BOLT CLAMP GROUP CONNECTION BE PROPERLY ALIGNED AND HAVE THE PROPER TORQUE VALUES MAINTAINED. METAL SURFACES CAN WORK AND WEAR AGAINST OTHER RELATED CLAMP GROUP COMPONENTS IF NOT PROPERLY ALIGNED OR PROPERLY TIGHTENED TO MAINTAIN THE PROPER CLAMP FORCE. FAILURE TO DO SO CAN CAUSE PREMATURE COMPONENT WEAR, POSSIBLE SEPARATION OF THE CLAMP GROUP, CAUSING ADVERSE VEHICLE HANDLING, PROPERTY DAMAGE, OR PERSONAL INJURY.

4. Tighten the U-bolt locknuts evenly in 50 foot pound increments to 375 ± 25 foot pounds torque in the proper pattern to achieve uniform bolt tension, see Figures 6-6.

FIGURE 6-6

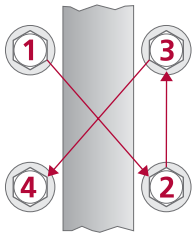

PIVOT BUSHING AND D-PIN BUSHING INSPECTION

WARNING

THE PIVOT BUSHING AND THE D-PIN BUSHING ARE CRITICAL COMPONENTS OF THE PRIMAAX EX • FIREMAAX EX | PRIMAAX • FIREMAAX SUSPENSIONS. IF ANY SUCH COMPONENTS APPEAR DAMAGED OR WORN THE COMPONENT MUST BE REPLACED. FAILURE TO REPLACE SUCH WORN OR DAMAGED COMPONENTS CAN RESULT IN THE DEFORMATION OF PARTS, LOSS OF CLAMP FORCE, BOLT FAILURE, LOSS OF THE AXLE'S ALIGNMENT, ADVERSE VEHICLE HANDLING, PROPERTY DAMAGE, OR PERSONAL INJURY.

There are two types of pivot bushing inspections for the PRIMAAX EX • PRIMAAX | FIREMAAX EX • FIREMAAX suspension. The pivot bushing can be visually inspected by looking at the outer rubber flange(s) of the bushing. If the visual inspection warrants, a physical inspection can be conducted in which disassembly is required.

PIVOT BUSHING VISUAL INSPECTION

To perform pivot bushing visual inspection, it is not necessary to disassemble the pivot bushing connection. If the pivot bushing rubber flange(s) are intact and there are no signs of metal to metal contact the bushing does not require replacement.

FIGURE 6-7 FIGURE 6-8 FIGURE 6-9

INSPECT FOR TORN, DISCONNECTED OR MISSING RUBBER FLANGE

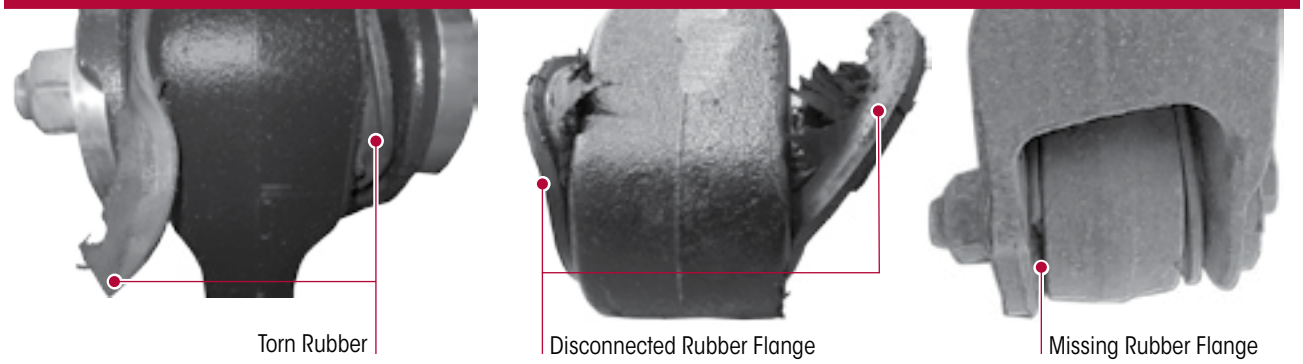

- The support beam is designed with the pivot bushing centered in the support beam end hub. If the pivot bushing is not centered in the end hub, it is an indication that the pivot bushing could be worn and a pivot bushing physical inspection is required.
- If the pivot bushing shows signs of torn, separated or disconnected rubber, see Figures 6-7 and 6-8, this could be a result of axle misalignment. If this condition is evident, a pivot bushing physical inspection is required.
- If the outer rubber flange(s) is missing, or there are shards of rubber visible, see Figure 6-9, this could be a result of axle misalignment. If this condition is evident, pivot bushing replacement is required.

FIGURE 6-10

GOOD JOINT - NO REPLACEMENT NEEDED

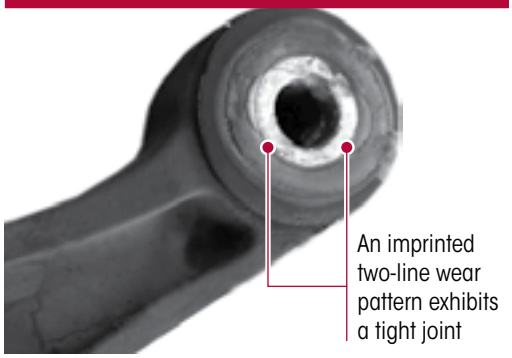

PIVOT BUSHING PHYSICAL INSPECTION

1. Remove the U-beam assembly, refer to U-beam Assembly in the Component Replacement of this publication.
2. After removal, inspect the pivot bushing connection, examine the pivot bushing inner metal area.
3. No replacement is needed if the bushing exhibits a tight joint, see Figure 6-10. An imprinted two-line wear pattern on the bushing inner metal indicates the pivot bushing is securely clamped in the frame hanger.

4. Inspect pivot bushing, replacement is necessary if any indications of the following are apparent, see Figure 6-11:
   - Signs of rust, distorted, separated or torn rubber, elongated or damaged bore. This could be a result of axle misalignment or loose fasteners.

FIGURE 6-11

INSPECT FOR INDICATIONS OF A LOOSE JOINT

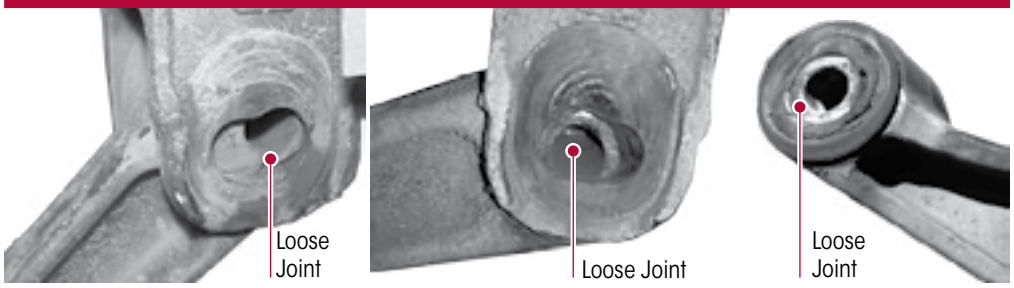

5. Inspect the inside of the frame hanger legs and the QUIK-ALIGN collars. If any of the following are present, the pivot bushing and one (1) or more of the mating components may require replacement:
   - Evidence of wear marks on the inside of the frame hanger legs indicating metal to metal contact or movement
   - The snout of the QUIK-ALIGN concentric or eccentric collar is elongated or damaged
6. Check the suspension alignment and adjust if necessary. Refer to Alignment & Adjustments Section of this publication.

D-PIN BUSHING VISUAL INSPECTION

It is not necessary to disassemble the D-Pin connection to perform a D-Pin visual inspection. The D-Pin bushing is designed with a layer of rubber in the bushing, it is acceptable to see a bead of rubber protruding from the bushing, see Figure 6-12.

D-Pin bushing replacement **IS REQUIRED** only when:

- Metal to metal contact wear marks on the D-pin outer metal are evident, see Figure 6-13
- D-pin outer metal is distorted, see Figure 6-13

FIGURE 6-12

ACCEPTABLE D-PIN

FIGURE 6-13

UNACCEPTABLE D-PIN

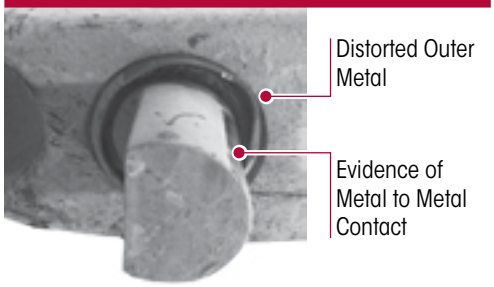

LONGITUDINAL AND TRANSVERSE TORQUE RODS

INSPECTION

NOTE Hendrickson recommends the use of Grade 8 bolts and Grade C locknuts for all straddle mount torque rod attachments.

WARNING PRIMAAX EX • FIREMAAX EX | PRIMAAX • FIREMAAX SUSPENSIONS INCORPORATE TRANSVERSE RODS FOR VEHICLE STABILITY. IF THESE COMPONENTS ARE DISCONNECTED OR ARE NON-FUNCTIONAL THE VEHICLE SHOULD NOT BE OPERATED. FAILURE TO DO SO CAN RESULT IN ADVERSE VEHICLE HANDLING AND POSSIBLE TIRE CONTACT WITH THE FRAME. OPERATING A VEHICLE WITH NON-FUNCTIONAL TRANSVERSE TORQUE RODS CAN RESULT IN ADVERSE VEHICLE HANDLING, SEVERE PERSONAL INJURY, AND PREMATURE COMPONENT DAMAGE.

Visually inspect torque rod bushings for torn or shredded rubber, inspect for bent, cracked, or broken torque rods, and for end hubs with an elongated oval shape. Any of these conditions will require component replacement.

Torque rod looseness inspection is necessary per one of the following methods below.

- **Method 1** — for tractor applications only with brakes applied, slowly rock the empty vehicle with power while a mechanic visually checks the action at both ends
- **Method 2** — with the vehicle shut down, a lever check can be made with a long pry bar placed under each rod end and pressure applied

TORQUE ROD LENGTH

Longitudinal torque rod length is determined by the truck manufacturer for optimum driveline angles. The longitudinal torque rods along with the bottom caps maintain these angles and control acceleration and brake forces, refer to the Pinion Angle Chart in the Parts Lists Section of this publication.

Transverse rod length is also determined by the vehicle manufacturer to center the axles under the frame.

- If the lateral alignment of the axles is incorrect, it may be necessary to shim the transverse torque rod at the straddle mount end. Shims can be installed between the transverse torque rod and the transverse torque rod frame bracket or between the transverse torque rod and axle tower bracket. Refer to vehicle manufacturer for proper shim location; also see Lateral Alignment in the Alignment & Adjustments Section of this publication.
- The transverse torque rods also control axle walk-out during cornering. The mounting brackets at the axle housing end of the torque rods are furnished and welded into position on the axle housings by the axle or vehicle manufacturer.

Transverse and longitudinal torque rods have attaching ends designated as straddle mount, tapered stud, or through bolt as shown in Figures 6-14 and 6-15. Most can be replaced by pressing out the worn torque rod bushing and installing a replacement bushing, others require complete torque rod assembly replacement.

FIGURE 6-14

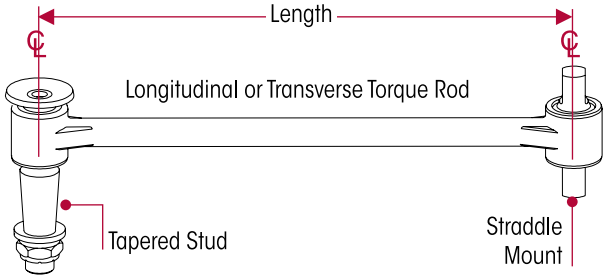

FIGURE 6-15

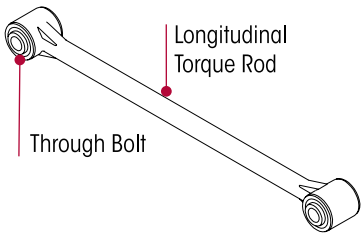

NOTE Some torque rods assemblies equipped on PRIMAAX EX • FIREMAAX EX | PRIMAAX • FIREMAAX suspension have curled end hubs and are not re-bushable. The entire torque rod assembly must be replaced. This feature provides superior bushing retention in the torque rod end hub.

- These torque rods can be identified by the part number **67428**-XXX or the suffix N after any part number (i.e. **62000-615N**)

A two-piece **transverse torque rod** is available to cut and weld to the desired length, see Hendrickson Literature No. 45745-148.

AIR FITTING INSPECTION

1. If an air leak is suspected, begin by building up the air system to normal operating pressure.
2. Spray all nylon tube air fittings with a soapy water solution to detect the leak location.

NOTE Air lines and fittings may be inspected for leaks using a soapy water solution. The height control valve, however, cannot be inspected using this method. All height control valves have an allowable leakage rate. The only acceptable method for inspection of the height control valves is the height control valve test found in this section.

3. If an air leak is located, ensure the tubing end is clean and in good condition and the end is cut square. Check to see if the tubing is binding, bent or being pulled upon.
4. Visually inspect the air fitting's O-ring seal for signs of damage or contamination.

SHOCK ABSORBER INSPECTION

FIGURE 6-16

Hendrickson uses a long service life, premium shock absorber on all PRIMAAX EX • FIREMAAX EX | PRIMAAX • FIREMAAX suspensions. If shock absorber replacement is necessary, Hendrickson recommends that the shock absorbers be replaced with original Hendrickson Genuine parts for servicing. Failure to do so will affect the suspension performance, durability, and will void the warranty.

Inspection of the shock absorber can be performed by doing a heat test, and a visual inspection. Also inspect the shock absorber mounting brackets and hardware for damage or wear, replace as necessary. See shock absorber replacement in the Component Replacement Section of this publication. It is not necessary to replace shock absorbers in pairs if one (1) shock absorber requires replacement.

HEAT TEST

1. Drive the vehicle at moderate speeds on rough road for minimum of fifteen minutes.

⚠ WARNING DO NOT GRAB THE SHOCK AS IT COULD POSSIBLY CAUSE PERSONAL INJURY.

2. Use an infrared thermometer to check the temperature of the shock absorber. This can also be performed by carefully touching the shock body below the dust cover. Touch the frame to get an ambient reference, see Figure 6-16. A warm shock absorber is acceptable, a cold shock absorber should be replaced.
3. To inspect for an internal failure, remove and shake the suspected shock. Listen for the sound of metal parts rattling inside. Rattling of metal parts can indicate that the shock has an internal failure.

VISUAL INSPECTION

Look for these potential problems when doing a visual inspection as shown in Figure 6-17. Inspect the shock absorbers fully extended. Replace as necessary.

FIGURE 6-17

SHOCK ABSORBER VISUAL INSPECTION - UNACCEPTABLE CONDITIONS

LEAKING VS. MISTING SHOCK VISUAL INSPECTION

FIGURE 6-18

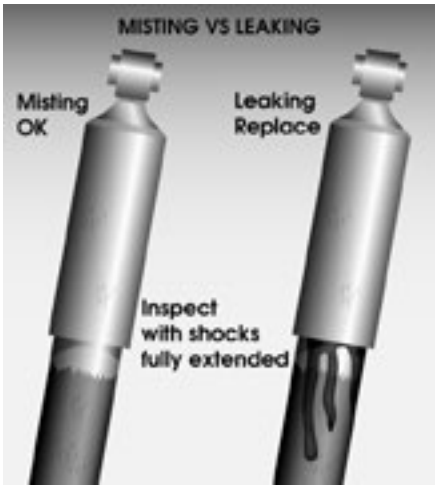

The inspection must not be conducted after driving in wet weather or a vehicle wash. Shocks need to be free from water. Many shocks are often misdiagnosed as failures. Misting is the process whereby very small amounts of shock fluid evaporate at a high operating temperature through the upper seal of the shock. When the "mist" reaches the cooler outside air, it condenses and forms a film on the outside of the shock body. Misting is perfectly normal and necessary function of the shock. The fluid, which evaporates through the seal area helps to lubricate and prolong the life of the seal.

A shock that is truly leaking and needs to be replaced will show signs of fluid leaking in streams from the upper seal. These streams can easily be seen when the shock is fully extended, underneath the main body (dust cover) of the shock. Look for these potential problems when doing a visual inspection. Inspect the shock absorbers fully extended. Replace as necessary.

NOTE

The PRIMAAX EX • FIREMAAX EX | PRIMAAX • FIREMAAX suspension is equipped with a premium seal on the shock, however this seal will allow for misting to appear on the shock body (misting is not a leak and is considered acceptable).

If the shock is damaged install new shock absorber and replace as detailed in the Component Replacement Section of this publication.

SECTION 7
Alignment & Adjustments

RIDE HEIGHT

Hendrickson recommends a single height control valve for most tandem and single axle suspensions. However, some applications require dual height control valves. Hendrickson has approved dual height control valves for the following applications:

FIGURE 7-1

- All front discharge mixer vehicles equipped with PRIMAAX EX • PRIMAAX 14⅜"-15½" ride height
- All fire rescue vehicles equipped with FIREMAAX EX • FIREMAAX suspensions
- Contact Hendrickson and the vehicle manufacturer for other applications that may be approved

NON-HENDRICKSON HEIGHT CONTROL VALVES EQUIPPED

Some vehicles may be equipped with non Hendrickson supplied height control valve(s).

NOTE When servicing a suspension with non Hendrickson height control valves, refer to the vehicle manufacturer's instructions for ride height inspection and adjustment.

SINGLE HEIGHT CONTROL VALVE

INSPECTION

1. Drive the vehicle onto a level surface.
2. Free and center all suspension joints by slowly moving vehicle back and forth several times without using the brakes. **When coming to a complete stop, make sure the brakes are released.** End with all wheels positioned straight ahead. Try to roll to a stop without the brakes being used. **DO NOT** set the parking brake.
3. Chock front wheels of the vehicle.
4. When checking or adjusting ride height, verify and maintain the vehicle's air system is at full operating pressure.

SERVICE HINT It is very important that the height control valve is cycled completely before and after any ride height adjustments. The cycling of the height control valve will help to make the adjustment more accurate.

WARNING PRIOR TO AND DURING DEFLATION AND INFLATION OF THE AIR SUSPENSION SYSTEM, ENSURE THAT ALL PERSONNEL AND EQUIPMENT ARE CLEAR FROM UNDER THE VEHICLE AND AROUND THE SERVICE AREA, FAILURE TO DO SO CAN CAUSE SERIOUS PERSONAL INJURY, DEATH, OR PROPERTY DAMAGE.

5. See additional Air Spring Cautions and Warnings in the Important Safety Notice Section of this publication prior to deflating or inflating the air system.

WARNING SOME VEHICLE APPLICATIONS, SUCH AS VEHICLES EQUIPPED WITH OUTRIGGERS, RETAIN SOME AIR PRESSURE IN THE AIR SPRINGS AT ALL TIMES. PRIOR TO PERFORMING ANY MAINTENANCE, SERVICE, OR REPAIR OF THE SUSPENSION, VERIFY EACH AIR SPRING IS COMPLETELY DEFLATED. FAILURE TO DO SO COULD RESULT SERIOUS PROPERTY DAMAGE AND/OR SEVERE PERSONAL INJURY.

6. Deflate the suspension by using one of the following appropriate methods:
   a. If vehicle is equipped with a suspension dump system in the cab, deflate the suspension air system by using the cab dump valve control.

b. If not equipped with a suspension dump system detach the upper rubber grommet of the height control valve linkage from the height control valve arm and exhaust the suspension system air by lowering the height control valve arm, see Figure 7-2.

FIGURE 7-2

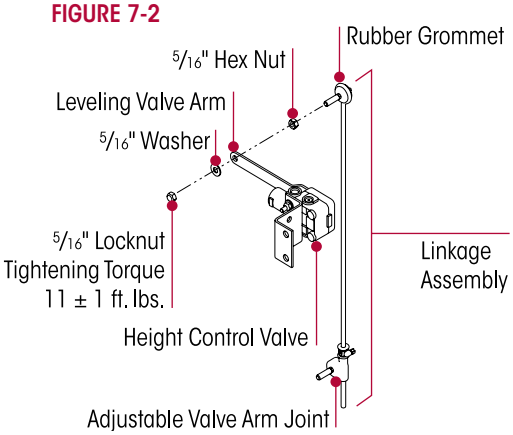

7. Inflate the suspension by using one of the following methods:
   a. If the vehicle is equipped with a suspension dump system in the cab, inflate the suspension air system by using the cab dump valve control. Allow the suspension system to inflate.
   b. If the vehicle is not equipped with a suspension dump system, raise the height control valve arm and attach the upper rubber grommet of the height control valve linkage to the height control valve arm. Allow the suspension system to inflate.
8. Measure the suspension ride height. Measure the distance from the bottom of the frame rail to the axle centerline on the wheel ends where the height control valve is located.

NOTE All ride heights to be taken on the axle attached to the height control valve(s). Ride height is measured from the bottom of the frame to the axle centerline.

9. Compare the measured ride height dimensions to the specified dimension for your suspension in Figure 7-3.
   a. If the ride height **IS** correct then height control valve adjustment is not required.
   b. If the ride height is **NOT** correct, then height control valve adjustment is required. Refer to the Adjustment Procedure in this section.

FIGURE 7-3

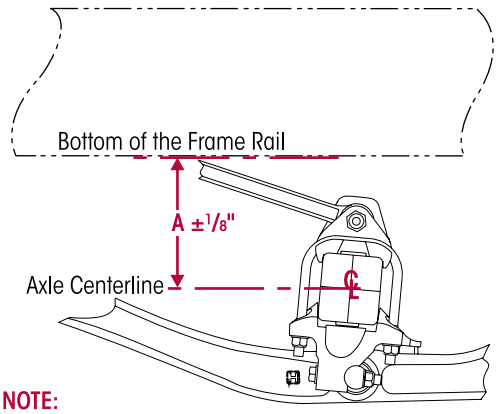

NOTE:
- All ride heights to be taken on the axle with the height control valve(s) attached.
- Ride height is measured from the bottom of frame rail to the axle centerline ± 1/8", (average of weld bead on front and rear of axle at the clamp group).
- If the vehicle is equipped with dual height control valves, the ride height must be checked at each height control valve location.

	Ride Height Dim. A ± 1/8"		Ride Height / Tall Hanger Dim. A ± 1/8"		
OEM	Spacer	No Spacer	Spacer	No Spacer	
Advance	—	—	—	14.375"	—
ALF	8.5"	10.0"	—	—	—
Autocar					
CCC					
E-One					
Ferrara					
Freightliner					
HME					
IPI	—	—	—	14.375"	15.5"
Kenworth	8.5"	10.0"	—	—	15.5"
Oshkosh	—	—	—	14.375"	15.5"
Pierce	8.65"	10.5"	12.5"	—	—
Seagrave	8.5"	10.0"	—	—	—
Sterling					
Sutphen					
Western Star					

ADJUSTMENT PROCEDURE

1. Drive the vehicle onto a level surface.
2. Free and center all suspension joints by slowly moving vehicle back and forth several times without using the brakes. When coming to a complete stop, make sure the brakes are released. End with all wheels positioned straight ahead. Try to roll to a stop without the brakes being used. **DO NOT** set the parking brake.
3. Chock front wheels of the vehicle.
4. When checking or adjusting ride height, verify and maintain the vehicle's air system at full operating pressure.

SERVICE HINT

It is very important that the height control valve is cycled completely before and after any ride height adjustments. The cycling of the height control valve will help to make the adjustment more accurate.

WARNING

PRIOR TO AND DURING DEFLATION AND INFLATION OF THE AIR SUSPENSION SYSTEM, ENSURE THAT ALL PERSONNEL AND EQUIPMENT ARE CLEAR FROM UNDER THE VEHICLE AND AROUND THE SERVICE AREA, FAILURE TO DO SO CAN CAUSE SERIOUS PERSONAL INJURY, DEATH, OR PROPERTY DAMAGE.

WARNING

SOME VEHICLE APPLICATIONS, SUCH AS VEHICLES EQUIPPED WITH OUTRIGGERS, RETAIN SOME AIR PRESSURE IN THE AIR SPRINGS AT ALL TIMES. PRIOR TO PERFORMING ANY MAINTENANCE, SERVICE, OR REPAIR OF THE SUSPENSION, VERIFY EACH AIR SPRING IS COMPLETELY DEFLATED. FAILURE TO DO SO COULD RESULT SERIOUS PROPERTY DAMAGE AND/OR SEVERE PERSONAL INJURY.

5. See additional Air Spring Cautions and Warnings in the Important Safety Notice Section of this publication prior to deflating or inflating the air system.
6. Detach the upper rubber grommet of the height control valve linkage from the height control valve arm and exhaust the suspension system air by lowering the height control valve arm.
7. Refill the suspension by raising the height control valve arm by hand, so that the air springs are above the proper ride height.
8. Lower the height control valve arm to exhaust the air system until the suspension is at proper ride height.
9. Use a ⅛" wooden dowel rod (golf tee) to set the neutral position for the height control valve by aligning the hole in the leveling arm with the hole in the height control valve cover, as shown in Figure 7-4. **DO NOT** use a metal rod or nail as this may cause damage to the height control valve.

FIGURE 7-4

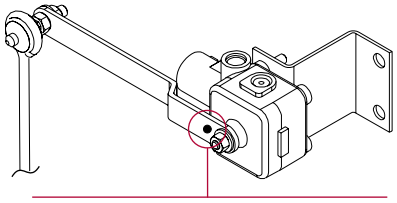

To set neutral position align hole with hole on height control valve cover

10. Correct the adjustable valve arm joint so the rubber grommet can be reconnected to the height control valve arm at the proper height. Check the rubber components for any tearing or damage, replace as necessary.
11. Connect the rubber grommet to the height control valve arm.
12. Tighten the clamp on the adjustable valve arm joint with a screwdriver until securely fastened, see Figure 7-2. Remove the dowel from the height control valve.
13. Verify the ride height is correct by performing the Ride Height Inspection as detailed in this section.

DUAL HEIGHT CONTROL VALVES

INSPECTION

SERVICE HINT

When inspecting or setting ride height on a lightly loaded vehicle, such as, a bobtail tractor equipped with dual height control valves, it is necessary to have a load on the vehicle. Loading the vehicle to its normal operating condition, such as a tractor with a loaded trailer, increases ride height setting accuracy.

1. Drive the vehicle onto a level surface.
2. Free and center all suspension joints by slowly moving vehicle back and forth several times without using the brakes. **When coming to a complete stop, make sure the brakes are released.** End with all wheels positioned straight ahead. Try to roll to a stop without the brakes being used. **DO NOT** set the parking brake.
3. Chock front wheels of the vehicle.
4. When checking or adjusting ride height, verify and maintain the vehicle's air system at full operating pressure.

SERVICE HINT

It is very important that the height control valves be cycled completely before and after any ride height adjustments. The cycling of the height control valve will help to make the adjustment more accurate.

WARNING

PRIOR TO AND DURING DEFLATION AND INFLATION OF THE AIR SUSPENSION SYSTEM, ENSURE THAT ALL PERSONNEL AND EQUIPMENT ARE CLEAR FROM UNDER THE VEHICLE AND AROUND THE SERVICE AREA, FAILURE TO DO SO CAN CAUSE SERIOUS PERSONAL INJURY, DEATH, OR PROPERTY DAMAGE.

5. See additional Air Spring Cautions and Warnings in the Important Safety Notice Section of this publication prior to deflating or inflating the air system.

WARNING

SOME VEHICLE APPLICATIONS, SUCH AS VEHICLES EQUIPPED WITH OUTRIGGERS, RETAIN SOME AIR PRESSURE IN THE AIR SPRINGS AT ALL TIMES. PRIOR TO PERFORMING ANY MAINTENANCE, SERVICE, OR REPAIR OF THE SUSPENSION, VERIFY EACH AIR SPRING IS COMPLETELY DEFLATED. FAILURE TO DO SO COULD RESULT SERIOUS PROPERTY DAMAGE AND/OR SEVERE PERSONAL INJURY.

6. Deflate the suspension by using one of the following appropriate methods:
   a. If vehicle is equipped with a suspension dump system in the cab, deflate the suspension air system by using the cab dump valve control.
   b. If not equipped with a suspension dump system, detach both the upper rubber grommets of the height control valve linkages from the height control valve arms and exhaust the suspension system air by lowering the height control valve arms, see Figure 7-2.
7. Inflate the suspension by using one of the following methods:
   a. If the vehicle is equipped with a suspension dump system in the cab, inflate the suspension air system by using the cab dump valve control. Allow the suspension system to inflate.
   b. If the vehicle is not equipped with a suspension dump system, raise the height control valve arms and attach the upper rubber grommets of the height control valve linkage to the height control valve arms. Allow the suspension system to inflate.
8. Measure the suspension ride height. Measure the distance from the bottom of the frame rail to the axle centerline on the wheel ends where the height control valves are located.

NOTE

A vehicle equipped with dual height control valves must measure the ride height at each height control valve location.

NOTE

All ride heights are measured on the axle attached to the height control valve(s). Ride height is measured from the bottom of the frame to the axle centerline.

9. Compare the measured ride height dimensions to the specified dimension for your suspension in Figure 7-3.
   a. If ride height is correct then height control valve adjustment is not required.
   b. If ride height is **NOT** correct then height control valve adjustment is required. Refer to the Adjustment Procedure in this section.

ADJUSTMENT PROCEDURE

SERVICE HINT

When inspecting or setting ride height on a lightly loaded vehicle, such as a bobtail tractor, equipped with dual height control valves, it is necessary to have a load on the vehicle. Loading the vehicle to its normal operating condition, such as a tractor with a loaded trailer, increases ride height setting accuracy.

1. Drive the vehicle onto a level surface.
2. Free and center all suspension joints by slowly moving vehicle back and forth several times without using the brakes. When coming to a complete stop, make sure the brakes are released. End with all wheels positioned straight ahead. Try to roll to a stop without the brakes being used. **DO NOT** set the parking brake.
3. Chock front wheels of the vehicle.
4. When checking or adjusting ride height, verify and maintain the vehicle's air system at full operating pressure.

SERVICE HINT

It is very important that the height control valves be cycled completely before and after any ride height adjustments. The cycling of the height control valves will help to make the adjustment more accurate.

⚠ WARNING

PRIOR TO AND DURING DEFLATION AND INFLATION OF THE AIR SUSPENSION SYSTEM, ENSURE THAT ALL PERSONNEL AND EQUIPMENT ARE CLEAR FROM UNDER THE VEHICLE AND AROUND THE SERVICE AREA, FAILURE TO DO SO CAN CAUSE SERIOUS PERSONAL INJURY, DEATH, OR PROPERTY DAMAGE.

5. See additional Air Spring Cautions and Warnings in the Important Safety Notice Section of this publication prior to deflating or inflating the air system.

⚠ WARNING

SOME VEHICLE APPLICATIONS, SUCH AS VEHICLES EQUIPPED WITH OUTRIGGERS, RETAIN SOME AIR PRESSURE IN THE AIR SPRINGS AT ALL TIMES. PRIOR TO PERFORMING ANY MAINTENANCE, SERVICE, OR REPAIR OF THE SUSPENSION, VERIFY EACH AIR SPRING IS COMPLETELY DEFLATED. FAILURE TO DO SO COULD RESULT SERIOUS PROPERTY DAMAGE AND/OR SEVERE PERSONAL INJURY.

6. Detach the upper rubber grommets of the height control valve linkages from the height control valve arms and exhaust the suspension system air by lowering the height control valve arms.
7. Refill the suspension by raising the height control valve arms by hand, so that the air springs are above the proper ride height.
8. Lower the height control valve arms to exhaust the suspension air system until the suspension is at proper ride height.

NOTE

Adjustments to one (1) height control valve may affect ride height setting on the other height control valve. Verify ride height is correct at both height control valves whenever an adjustment is made.

9. Use a ⅛" wooden dowel rod (golf tee) to set the neutral position for each height control valve by aligning the hole in the leveling arm with the hole in the height control valve cover, as shown in Figure 7-4. **DO NOT** use a metal rod or nail as this may cause damage to the height control valve.
10. Steps 7 to 9 might need to be repeated using one (1) height control valve at a time.
11. Correct the adjustable valve arm joints so the rubber grommets can be reconnected to the height control valve arms at the proper height. Check the rubber components for any tearing or damage, replace as necessary.
12. Connect the rubber grommets to the height control valve arms.

13. Tighten the clamps on the adjustable valve arm joints with a screwdriver until securely fastened, see Figure 7-2. Remove the dowel from the height control valves.
14. Verify the ride height is correct by performing the Ride Height Inspection as detailed in this section.

DRIVE AXLE ALIGNMENT INSPECTION

Proper alignment is essential for maximum ride quality, performance, and tire service life, the recommended alignment procedure is described below. This procedure should be performed if excessive or irregular tire wear is observed, or any time the QUIK-ALIGN connection is loosened or removed.

1. Use a work bay with a level surface.
2. Relax the suspension by slowly moving the vehicle back and forth several times in a straight line without using the brakes. This will slacken or loosen the suspension as the vehicle is positioned. End with all wheels positioned straight ahead.
3. **DO NOT** set the parking brake. Chock the front wheels of the vehicle.
4. Verify and maintain the air system at full operating pressure.
5. Verify the vehicle is at the correct ride height. Correct as necessary. Refer to Ride Height Adjustment in this section.
6. Verify all suspension components are in good condition. Repair or replace any worn or damaged suspension components before proceeding with the alignment process.
7. Ensure all drive axle tires are the same size.
8. If axle alignment equipment is not available, using "C" clamps, securely clamp a six-foot piece of STRAIGHT bar stock or angle iron across the lower frame flange as shown in Figure 7-5. Select a location for the angle iron as far forward of the drive axle as possible where components will not interfere.
9. Accurately square the straight edge to the frame using a carpenter's square.
10. Using a measuring tape, measure from the straight edge to the forward face of the front drive axle arms at the centerline on both sides of the vehicle as shown in Figure 7-5, **A** and **B**.

FIGURE 7-5

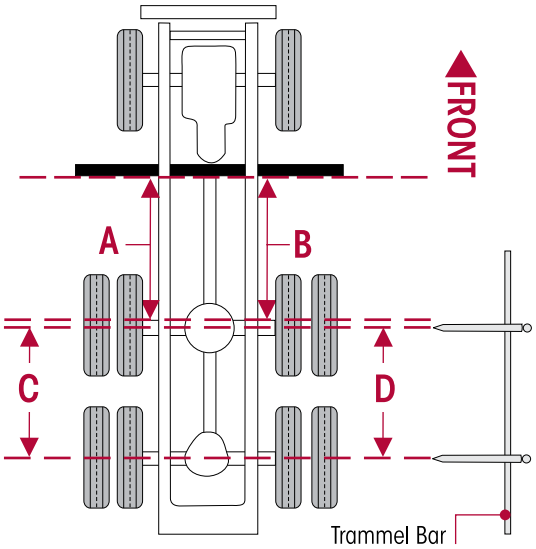

11. Calculate the difference between measurements **A** and **B**.
    a. If the front drive axle is within vehicle manufacturer's specifications, proceed to check the rear drive axle (Step 12).
    b. If alignment of the front drive axle **IS NOT** within the vehicle manufacturer's specifications, then the alignment of this axle **MUST** be corrected **BEFORE** measuring the rear drive axle alignment (Step 12). Correct the alignment of this axle by following the proper alignment instructions for the PRIMAAX EX • FIREMAAX EX | PRIMAAX • FIREMAAX suspension model as determined by the ride height of the suspension.

NOTE Since the remaining drive axle(s) will be aligned relative to the front drive axle, it is essential that the front drive axle is aligned within the vehicle manufacturer's specifications prior to the alignment of the remaining drive axle(s).

12. Using a trammel bar, measure the distance from the spindle center of the front drive axle to the spindle center of the rear drive axle on both sides of the vehicle, see Figure 7-5, **C** and **D**.
13. Calculate the difference between measurements **C** and **D**.
    a. If the measurements are within the vehicle manufacturer's specifications, then the rear drive axle alignment is acceptable. Proceed to check the pinion angles of the drive axles (Step 15).
    b. If alignment of the rear drive axle **IS NOT** within the vehicle manufacturer's specifications, then the alignment of this axle **MUST** be corrected **BEFORE** checking the drive axle pinion angles. Correct the alignment of this axle by following the proper alignment instructions for the PRIMAAX EX • FIREMAAX EX | PRIMAAX • FIREMAAX suspension model as determined by the ride height of the suspension.
14. Repeat Steps 12 and 13 for any remaining drive axle(s). Be sure all remaining drive axles are aligned relative to the front drive axle.
15. After all drive axles are aligned, check the pinion angle of each drive axle with a digital protractor, see Figure 7-6. Refer to the vehicle manufacturer specifications for the required pinion angles.
    a. If all pinion angles are within the vehicle manufacturer's specifications then proceed to Step 16.
    b. If any pinion angle is out of the vehicle manufacturer's specifications it must be corrected. Follow the correct Pinion Angle Adjustment Suspension Procedure for the PRIMAAX EX • FIREMAAX EX | PRIMAAX • FIREMAAX suspension model and ride height.
16. Recheck measurements to confirm adjustments. Repeat Steps 10 through 15 until the correct alignment and pinion angles are achieved.
17. When all drive axle alignments and pinion angles are within the vehicle manufacturer's specifications then the alignment procedure is complete.

AXLE PINION ANGLE

FIGURE 7-6

Drive axle pinion angles are established by the vehicle manufacturer. The suspension bottom caps, called out in the Pinion Angle Chart in the Parts Lists Section of this publication, are machined to specific angles to meet the vehicle manufacturer's specified requirements. If it is necessary to fine tune the pinion angle see the Alignment & Adjustments Section of this publication.

To check the pinion angle, verify first that the suspension is at the proper ride height (see Ride Height Adjustment in this Section), place a digital protractor on the axle housing as shown in Figure 7-6. Verify the pinion angle is within the range specified by the vehicle manufacturer.

AXLE LATERAL ALIGNMENT

FIGURE 7-7

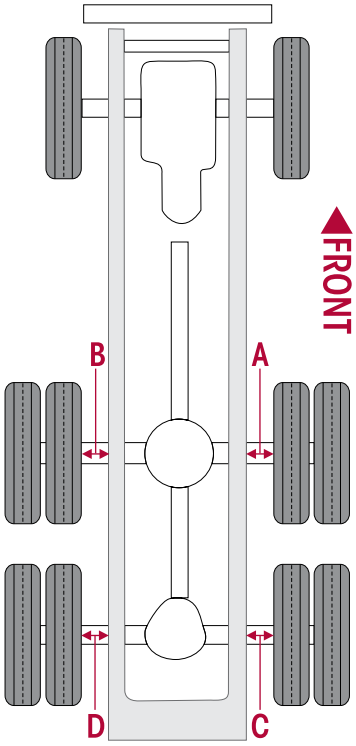

1. Use a work bay with a level floor. Drive the vehicle slowly, straight ahead. Try to slacken or loosen the suspension as the vehicle is positioned. End with all wheels positioned straight ahead. Try to roll to a stop without the brakes being used. **DO NOT** set the parking brake. Chock the front wheels of the vehicle.
2. Measure from the outside of the frame rail to the rim flange of the inner tire. Record the measurement **A** and **B**, see Figure 7-7.
3. Measure the same distance on the opposite side of the same axle. Record the measurement **C** and **D**, see Figure 7-7.
4. Verify the axle lateral alignment is within the vehicle manufacturer's specifications. Adding or removing shims that are located between the transverse torque rod and the frame rail will normally correct the axle lateral alignment.
   - A general rule of thumb is to use a torque rod shim with a thickness that is half of the difference between the two measurements.

EXAMPLE If the axle lateral alignment is out of specification by ¼" (6 mm), remove or install a ⅛" (3 mm) torque rod shim between the transverse torque rod and frame rail as needed. Refer to Longitudinal and Transverse Torque Rod Section in Preventive Maintenance Section of this publication.

NOTE Hendrickson recommends the use of Grade 8 bolts and Grade C locknuts. Washers are not necessary when flanged fasteners are used.

ALIGNMENT ADJUSTMENT INSTRUCTIONS

- **All models except: PRIMAAX • FIREMAAX Ride Height 12½", 14⅜", 15½"**

SERVICE HINT The eccentric collars (with the square drive feature) are located on the outboard side of the frame hangers with the concentric collars on the inboard side. The total range of fore/aft axle adjustment is 1.0" ± ½".

SERVICE HINT A suspension equipped with eccentric QUIK-ALIGN collars on both sides of an axle can be adjusted on both sides. A suspension equipped with an eccentric QUIK-ALIGN collar on only one side of the axle can be adjusted only on the side that has the eccentric QUIK-ALIGN collar. Contact the vehicle manufacturer for specifications.

⚠ WARNING

DISCARD USED QUIK-ALIGN FASTENERS. ALWAYS USE NEW QUIK-ALIGN FASTENERS TO COMPLETE A REPAIR. FAILURE TO DO SO COULD RESULT IN FAILURE OF THE PART, OR MATING COMPONENTS, ADVERSE VEHICLE HANDLING, PERSONAL INJURY, OR PROPERTY DAMAGE.

DO NOT ASSEMBLE QUIK-ALIGN JOINT WITHOUT THE PROPER FASTENERS. USE ONLY H-COATED FASTENERS TO SUSTAIN PROPER CLAMP FORCE. FAILURE TO DO SO CAN CAUSE ADVERSE VEHICLE HANDLING, PROPERTY DAMAGE OR PERSONAL INJURY AND VOID WARRANTY. ENSURE THAT THE QUIK-ALIGN FASTENER'S TORQUE VALUES ARE SUSTAINED AS RECOMMENDED IN THE TORQUE SPECIFICATIONS SECTION OF THIS PUBLICATION. FAILURE TO DO SO CAN CAUSE ADVERSE VEHICLE HANDLING RESULTING IN PERSONAL INJURY OR PROPERTY DAMAGE. FOLLOW VEHICLE MANUFACTURER'S FASTENER ORIENTATION WHEN PERFORMING ANY MAINTENANCE, SERVICE OR REPAIR.

1. Support the frame at ride height.

WARNING

PRIOR TO AND DURING DEFLATION AND INFLATION OF THE AIR SUSPENSION SYSTEM, ENSURE THAT ALL PERSONNEL AND EQUIPMENT ARE CLEAR FROM UNDER THE VEHICLE AND AROUND THE SERVICE AREA, FAILURE TO DO SO CAN CAUSE SERIOUS PERSONAL INJURY, DEATH, OR PROPERTY DAMAGE.

2. See additional Air Spring Warnings and Instructions in the Important Safety Notice Section of this publication prior to deflating or inflating the suspension system.
3. Disconnect the height control linkage assembly from the height control valve arm. Lower the height control valve arm to exhaust the air in the air springs and deflate the rear suspension. (See vehicle manufacturer's instructions).

FIGURE 7-8

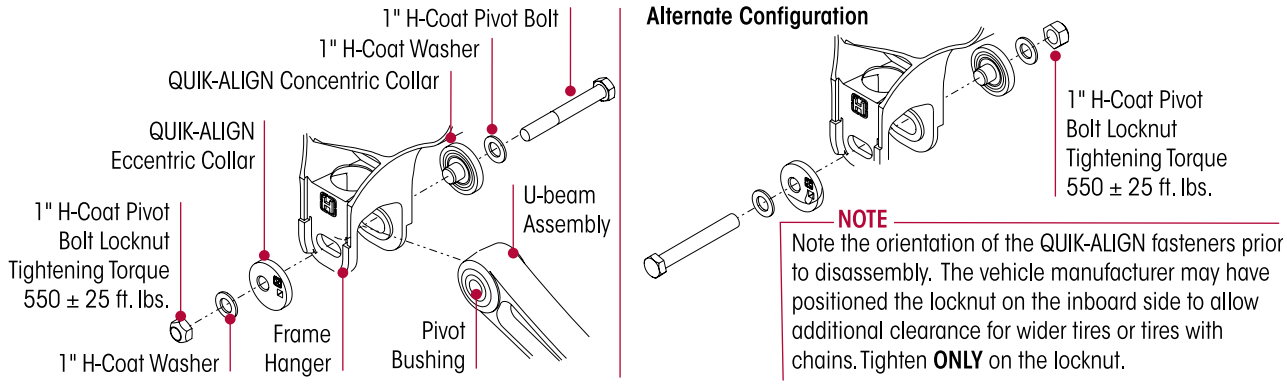

WARNING

SOME VEHICLE APPLICATIONS, SUCH AS VEHICLES EQUIPPED WITH OUTRIGGERS, RETAIN SOME AIR PRESSURE IN THE AIR SPRINGS AT ALL TIMES. PRIOR TO PERFORMING ANY MAINTENANCE, SERVICE, OR REPAIR OF THE SUSPENSION, VERIFY EACH AIR SPRING IS COMPLETELY DEFLATED. FAILURE TO DO SO COULD RESULT SERIOUS PROPERTY DAMAGE AND/OR SEVERE PERSONAL INJURY.

4. Using the measurements from the Drive Axle Alignment Inspection Procedure, Step 11, determine which QUIK-ALIGN collar will need adjusting to correct the axle alignment.

SERVICE HINT

If the axle can be adjusted on both sides, begin the adjustment on the side that is furthest out of specification.

NOTE

Use a new QUIK-ALIGN pivot bolt kit (see the Parts List Section of this publication) for any axle alignment or disassembly of the QUIK-ALIGN connection. This will help ensure that the proper clamp load is applied to the connection and help prevent the joint to slip in service.

5. On the side being adjusted, remove the old QUIK-ALIGN fastener and replace it with a new QUIK-ALIGN fastener. Snug the QUIK-ALIGN fastener to 50-100 foot pounds. **DO NOT** tighten to torque at this time, see Figure 7-8. This will hold the eccentric flanged collar in place against the frame hanger face, and within the adjustment guide, but loose enough to permit the QUIK-ALIGN eccentric flanged collar to rotate freely.
6. Inflate the suspension by connecting the height control valve linkage to the height control valve arm. Verify the air springs inflate uniformly without binding.
7. Verify correct ride height.

NOTE

When adjusting the alignment of an axle, the fasteners connecting the longitudinal torque rod to the frame hanger, above the QUIK-ALIGN collar being adjusted, must be loose at the frame hanger. This will allow the longitudinal torque rod to move freely with the axle while the alignment is adjusted. Failure to do so will result in bushing preload in all rubber connections on that side of the axle, shortening component life.

8. On the side of the axle being adjusted, loosen the fasteners connecting the longitudinal torque rod to the frame hanger. Remove any existing shims from this connection. Leave connection loose at this time.

FIGURE 7-9

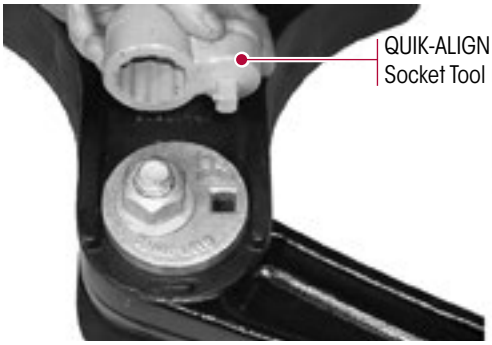

FIGURE 7-10

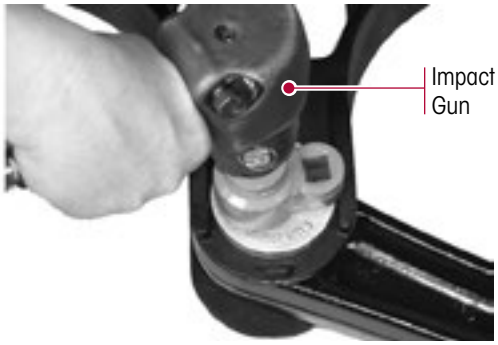

9. Use a QUIK-ALIGN socket tool, Figure 7-9 (also see Tool Section of this publication) and impact gun, see Figure 7-10, or a ½" square drive breaker bar to rotate the QUIK-ALIGN eccentric collar to align the axle.
10. Once the correct axle alignment is achieved, use a calibrated torque wrench to tighten the 1" QUIK-ALIGN locknuts to 550 ± 25 foot pounds torque.
11. Fill any gap between the frame hanger and longitudinal torque rod with shims.
12. Tighten the longitudinal torque rod fasteners to the proper specification, see Torque Specification Section of this publication per model designation.
13. Re-check the ride height and the axle alignment to verify they are within the vehicle manufacturer's specifications. See Rear Axle Alignment Inspection in this Section.
14. Return to the Drive Axle Alignment Inspection Procedure, Step 12, for the remaining drive axles.

ALIGNMENT ADJUSTMENT INSTRUCTIONS

■ PRIMAAX • FIREMAAX Ride Height 12½", 14⅜", 15½"

SERVICE HINT

The eccentric collars (with the square drive feature) are located on the outboard side of the frame hangers with the concentric collars on the inboard side. The total range of fore/aft axle adjustment is 1.0" ± ½".

SERVICE HINT

A suspension equipped with eccentric QUIK-ALIGN collars on both sides of an axle can be adjusted on both sides. A suspension equipped with an eccentric QUIK-ALIGN collar on only one side of the axle can be adjusted only on the side that has the eccentric QUIK-ALIGN collar. Contact the vehicle manufacturer for specifications.

WARNING

DISCARD USED QUIK-ALIGN FASTENERS. ALWAYS USE NEW QUIK-ALIGN FASTENERS TO COMPLETE A REPAIR. FAILURE TO DO SO COULD RESULT IN FAILURE OF THE PART, OR MATING COMPONENTS, ADVERSE VEHICLE HANDLING, PERSONAL INJURY, OR PROPERTY DAMAGE.

DO NOT ASSEMBLE QUIK-ALIGN JOINT WITHOUT THE PROPER FASTENERS. USE ONLY H-COATED FASTENERS TO SUSTAIN PROPER CLAMP FORCE. FAILURE TO DO SO CAN CAUSE ADVERSE VEHICLE HANDLING, PROPERTY DAMAGE OR PERSONAL INJURY AND VOID WARRANTY. ENSURE THAT THE QUIK-ALIGN FASTENER'S TORQUE VALUES ARE SUSTAINED AS RECOMMENDED IN THE TORQUE SPECIFICATIONS SECTION OF THIS PUBLICATION. FAILURE TO DO SO CAN CAUSE ADVERSE VEHICLE HANDLING RESULTING IN PERSONAL INJURY OR PROPERTY DAMAGE. FOLLOW VEHICLE MANUFACTURER'S FASTENER ORIENTATION WHEN PERFORMING ANY MAINTENANCE, SERVICE OR REPAIR.

1. Support the frame at ride height.

WARNING

PRIOR TO AND DURING DEFLATION AND INFLATION OF THE AIR SUSPENSION SYSTEM, ENSURE THAT ALL PERSONNEL AND EQUIPMENT ARE CLEAR FROM UNDER THE VEHICLE AND AROUND THE SERVICE AREA, FAILURE TO DO SO CAN CAUSE SERIOUS PERSONAL INJURY, DEATH, OR PROPERTY DAMAGE.

2. See additional Air Spring Warnings and Instructions in the Important Safety Notice Section of this publication prior to deflating or inflating the suspension system.

3. Disconnect the height control linkage assembly from the height control valve arm. Lower the height control valve arm to exhaust the air in the air springs and deflate the rear suspension, see vehicle manufacturer's instructions.

WARNING

SOME VEHICLE APPLICATIONS, SUCH AS VEHICLES EQUIPPED WITH OUTRIGGERS, RETAIN SOME AIR PRESSURE IN THE AIR SPRINGS AT ALL TIMES. PRIOR TO PERFORMING ANY MAINTENANCE, SERVICE, OR REPAIR OF THE SUSPENSION, VERIFY EACH AIR SPRING IS COMPLETELY DEFLATED. FAILURE TO DO SO COULD RESULT SERIOUS PROPERTY DAMAGE AND/OR SEVERE PERSONAL INJURY.

4. Using the measurements from the Drive Axle Alignment Inspection Procedure, Step 11, determine which QUIK-ALIGN collar will need adjusting to correct the axle thrust angle.

SERVICE HINT

If the axle can be adjusted on both sides, begin the adjustment on the side that is furthest out of specification.

NOTE

Use a new QUIK-ALIGN pivot bolt kit (see the Parts List Section of this publication) for any axle alignment or disassembly of the QUIK-ALIGN connection. This will help ensure that the proper clamp load is applied to the connection and help prevent the joint to slip in service.

5. On the side being adjusted, remove the old longitudinal torque rod QUIK-ALIGN fastener and replace it with a new longitudinal torque rod QUIK-ALIGN fastener. Leave the connection finger-tight at this time.

NOTE

When adjusting the alignment of an axle, the fastener connecting the longitudinal torque rod to the frame hanger, above the QUIK-ALIGN collar being adjusted, must be loose at the frame hanger. This will allow the longitudinal torque rod to move freely with the axle while the alignment is adjusted. Failure to do so will result in bushing preload in all rubber connections on that side of the axle, shortening component life.

6. On the side being adjusted, remove the old support beam QUIK-ALIGN fastener and replace it with a new support beam QUIK-ALIGN fastener. Snug to the new support beam QUIK-ALIGN fastener to 50-100 foot pounds. This will hold the eccentric flanged collar in place against the frame hanger face, and within the adjustment guide, but loose enough to permit the QUIK-ALIGN eccentric flanged collar to rotate freely.
7. See additional air spring warnings and instructions in the Important Safety Notice Section of this publication prior to deflating or inflating the suspension system.
8. Inflate the suspension by connecting the height control valve linkage to the height control valve arm. Verify the air springs inflate uniformly without binding.
9. Verify correct ride height.

SERVICE HINT

The square drive of both the torque rod and support beam eccentric collars will rotate to move in the same direction fore and aft, see Figure 7-11.

10. Use a QUIK-ALIGN socket tool (refer to the Special Tools Section) and impact gun, see Figure 7-12, or a ½" square drive breaker bar to rotate the support beam QUIK-ALIGN eccentric collar to align the axle. The square drive on the QUIK-ALIGN collar will rotate fore and aft above the centerline of the bolt. From the center position, see Figure 7-13, a 90° rotation of the support beam QUIK-ALIGN eccentric collar will move the axle fore or aft up to a maximum of ½".
11. Once the correct axle alignment is achieved, use a calibrated torque wrench to tighten the support beam QUIK-ALIGN locknuts to 500 ± 25 foot pounds torque.

FIGURE 7-11

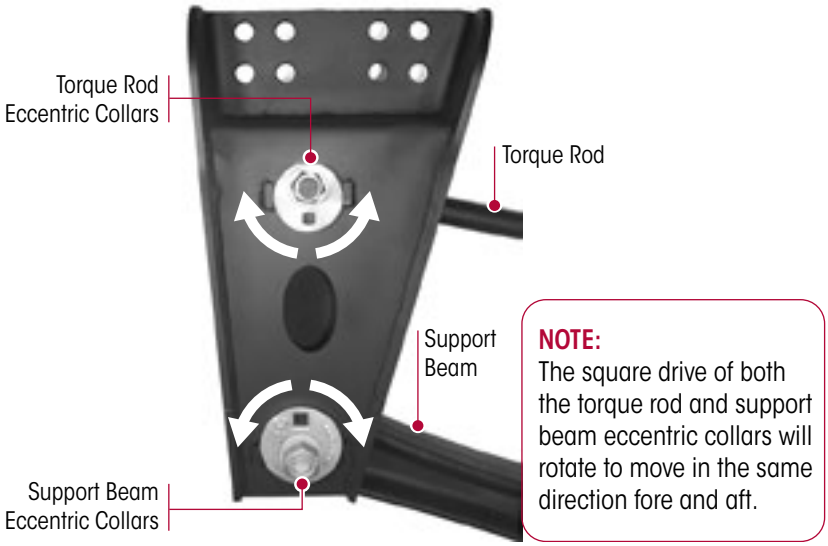

NOTE:
The square drive of both the torque rod and support beam eccentric collars will rotate to move in the same direction fore and aft.

FIGURE 7-12

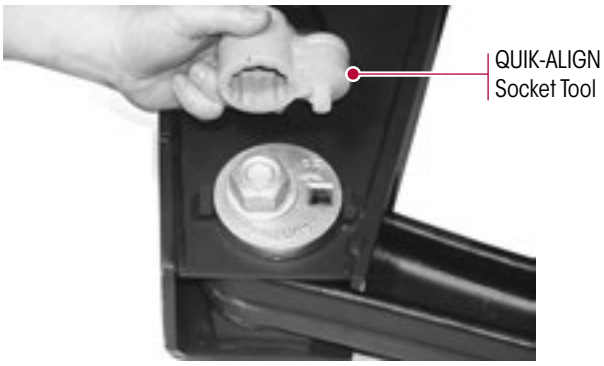

FIGURE 7-13

12. Verify the longitudinal QUIK-ALIGN eccentric collar is seated properly against the frame hanger face and is between the alignment guides. Rotate the longitudinal QUIK-ALIGN eccentric collar, clockwise or counter-clockwise as needed, until the longitudinal torque rod is neither being pushed or pulled on.
13. Tighten the longitudinal torque rod QUIK-ALIGN fastener to 🔧 500 ± 25 foot pounds torque.
14. Re-check the ride height and the axle alignment to verify they are within the vehicle manufacturer's specifications. See Drive Axle Alignment Procedure in this Section.
15. Proceed to Step 12 on the Drive Axle Alignment Inspection Procedure.

PINION ANGLE ADJUSTMENT

■ **All models except: PRIMAAX • FIREMAAX Ride Height 12½", 14⅜", 15½"**

ADJUSTMENT OF 1.5 DEGREES OR LESS

NOTE When correcting the pinion angle of an axle the correction must be in equal amounts on both sides of the axle. However, the total number of shims per side may differ due to axle alignment.

SERVICE HINT A general rule of thumb is, ⅛" change in the shim pack thickness will increase or decrease the pinion angle by ½ degree.

1. Loosen the fasteners connecting the longitudinal torque rods to the frame hangers.

2. Install or remove shims as required in **equal amounts** to both sides of the axle to achieve the proper pinion angle, see Figure 7-14. Therefore, to increase the pinion angle install shims, to decrease the pinion angle remove shims.
3. Tighten the longitudinal torque rod fasteners to the proper specification, see Torque Specification Section of this publication per model designation.
4. Re-check the pinion angle and verify it is within the vehicle manufacturer's specifications.

FIGURE 7-14

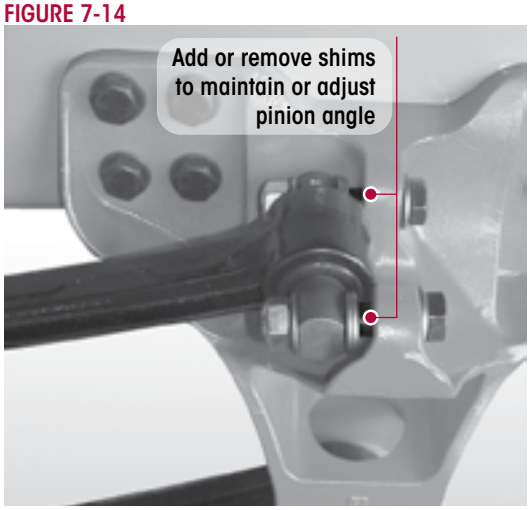

ADJUSTMENT OF MORE THAN 1.5 DEGREES

If an adjustment of more than 1.5 degrees is required, it will be necessary to replace the bottom cap with a bottom cap that will achieve the desired pinion angle. After replacement of the bottom cap perform the drive axle alignment procedure. See Pinion Angle Chart in the Parts List Section of this publication.

PINION ANGLE ADJUSTMENT

■ PRIMAAX • FIREMAAX ADJUSTMENT OF 1.5 DEGREES OR LESS

NOTE When correcting the pinion angle of an axle the torque rod, QUIK-ALIGN collars must be installed so they **DO NOT** preload either torque rod bushing.

1. Chock the front wheels of the vehicle.
2. Verify proper ride height adjustment; see Ride Height Adjustment in the Preventative Maintenance Section of this publication.
3. Install a floor jack under the pinion so the axle housing will not rotate when the **longitudinal QUIK-ALIGN** fasteners are loose.
4. Remove the **longitudinal QUIK-ALIGN** fasteners and discard.
5. From the inboard side of the frame hanger, install new **longitudinal QUIK-ALIGN** fasteners, flat washer, and **longitudinal QUIK-ALIGN concentric** collar through the frame hanger and torque rod bushing. **DO NOT** attach the **longitudinal QUIK-ALIGN eccentric** collar, flat washer, and locknut at this time, see Figure 7-15.
6. Raise or lower the floor jack to achieve the proper pinion angle. Refer to the vehicle manufacturer for the specified angle.

⚠ WARNING DISCARD USED QUIK-ALIGN FASTENERS. ALWAYS USE NEW QUIK-ALIGN FASTENERS TO COMPLETE A REPAIR. FAILURE TO DO SO COULD RESULT IN FAILURE OF THE PART, OR MATING COMPONENTS, ADVERSE VEHICLE HANDLING, PERSONAL INJURY, OR PROPERTY DAMAGE.

⚠ WARNING DO NOT ASSEMBLE QUIK-ALIGN JOINT WITHOUT THE PROPER FASTENERS. USE ONLY H-COATED FASTENERS TO SUSTAIN PROPER CLAMP FORCE. FAILURE TO DO SO CAN CAUSE ADVERSE VEHICLE HANDLING, PROPERTY DAMAGE OR PERSONAL INJURY AND VOID WARRANTY. ENSURE THAT THE QUIK-ALIGN FASTENER'S TORQUE VALUES ARE SUSTAINED AS RECOMMENDED IN THE TORQUE SPECIFICATIONS SECTION OF THIS PUBLICATION. FAILURE TO DO SO CAN CAUSE ADVERSE VEHICLE HANDLING RESULTING IN PERSONAL INJURY OR PROPERTY DAMAGE. FOLLOW VEHICLE MANUFACTURER'S FASTENER ORIENTATION WHEN PERFORMING ANY MAINTENANCE, SERVICE OR REPAIR.

FIGURE 7-15

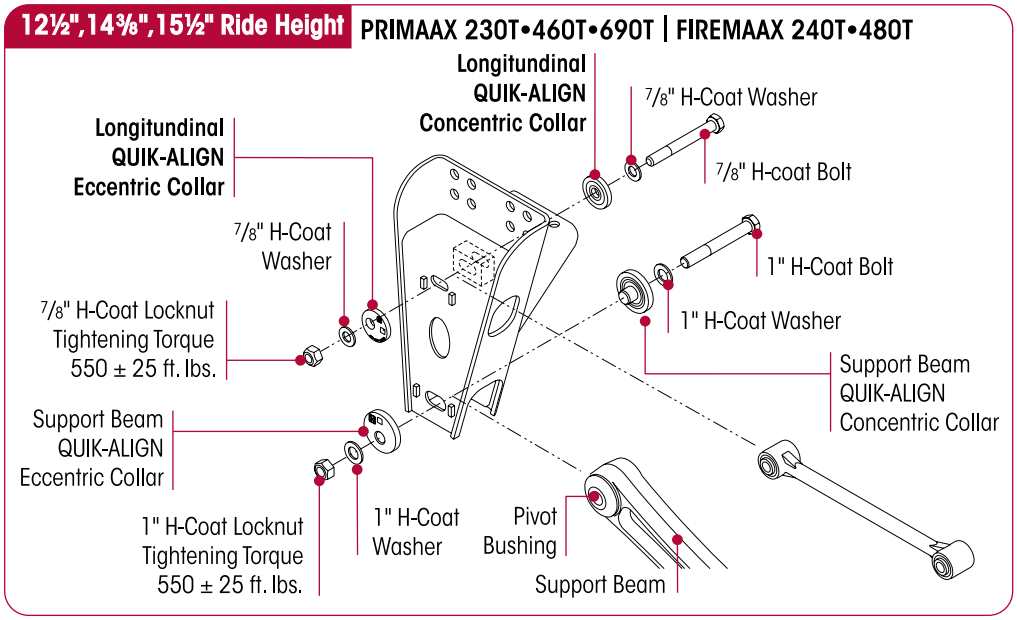

7. When the correct pinion angle is achieved, install the **longitudinal QUIK-ALIGN eccentric** collar, flat washer, and locknut. Verify the **longitudinal QUIK-ALIGN eccentric** collar is seated properly against the frame hanger face and is between the alignment guides, see Figure 7-15. The adjusting square should be at or below the centerline of the QUIK-ALIGN fastener. Rotate the **longitudinal QUIK-ALIGN eccentric** collar, clockwise or counter-clockwise as needed, until the longitudinal torque rod is neither being pushed or pulled on.
8. **Tighten** both **longitudinal QUIK-ALIGN** fasteners to 275 ± 25 foot pounds torque.
9. Remove the floor jack from under the pinion.
10. Verify the pinion angle is correct. See Pinion Angle Chart in the Parts List Section of this publication.
11. If the pinion angle is not correct, repeat Steps 1 through 8 until the correct pinion angle is achieved. **DO NOT** use the **longitudinal QUIK-ALIGN eccentric** collar to force the pinion to the proper angle. This will result in a preload on the torque rod and can reduce component life.

NOTE It is mandatory to have the vehicle at proper ride height prior to tightening the QUIK-ALIGN locknuts to torque specifications.

12. Once the proper pinion angle is achieved, apply the final torque of 500 ± 25 foot pounds.
13. Remove the wheel chocks from the front wheels.

ADJUSTMENT OF MORE THAN 1.5 DEGREES

If an adjustment of more than 1.5 degrees is required, it will be necessary to replace the bottom cap with a bottom cap that will achieve the desired pinion angle. After replacement of the bottom cap perform the drive axle alignment procedure, see Bottom Cap and Longitudinal Torque Rod Assembly table and refer to the pinion angle column in the Parts List Section of this publication.

SECTION 8
Component Replacement

FASTENERS

When servicing a vehicle, Hendrickson recommends replacing all removed fasteners with new equivalent fasteners. Maintain correct torque values at all times. Check torque values as specified. See Hendrickson's Torque Specifications Section of this publication. If non-Hendrickson fasteners are used follow torque specifications listed in the vehicle manufacturer's service manual.

AIR SPRING

■ 8½" and 10" Ride Height

DISASSEMBLY

1. Chock the wheels.
2. Support the frame.
3. Disconnect the height control valve's height control valve arm(s) from the rubber grommet.

⚠ WARNING

PRIOR TO AND DURING DEFLATION AND INFLATION OF THE AIR SUSPENSION SYSTEM, ENSURE THAT ALL PERSONNEL AND EQUIPMENT ARE CLEAR FROM UNDER THE VEHICLE AND AROUND THE SERVICE AREA, FAILURE TO DO SO CAN CAUSE SERIOUS PERSONAL INJURY, DEATH, OR PROPERTY DAMAGE.

4. See additional Air Spring Cautions and Warnings in the Important Safety Notice Section of this publication prior to deflating or inflating the air system.
5. Lower the height control valve arm(s) to exhaust the air in the air springs and deflate the rear suspension, see Figure 8-1.

FIGURE 8-1

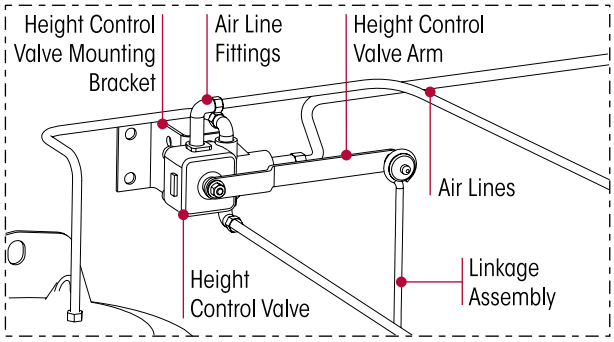

⚠ WARNING

SOME VEHICLE APPLICATIONS, SUCH AS VEHICLES EQUIPPED WITH OUTRIGGERS, RETAIN SOME AIR PRESSURE IN THE AIR SPRINGS AT ALL TIMES. PRIOR TO PERFORMING ANY MAINTENANCE, SERVICE, OR REPAIR OF THE SUSPENSION, VERIFY EACH AIR SPRING IS COMPLETELY DEFLATED. FAILURE TO DO SO COULD RESULT SERIOUS PROPERTY DAMAGE AND/OR SEVERE PERSONAL INJURY.

6. Remove the air line from the air spring.

⚠ CAUTION

IF THE AIR SPRING IS BEING REMOVED FOR AN ALTERNATE REPAIR, IT IS MANDATORY TO LUBRICATE THE LOWER AIR SPRING FASTENERS WITH PENETRATING OIL AND REMOVE WITH HAND TOOLS TO PREVENT DAMAGE TO THE LOWER AIR SPRING MOUNTING STUD. FAILURE TO DO SO CAN CAUSE COMPONENT DAMAGE AND VOID WARRANTY.

7. If the air spring is being removed for an alternate repair it will be necessary to clean and lubricate the lower mounting fasteners with penetrating oil. This will help prevent the air spring mounting studs from breaking during the removal process. Remove the lower mounting fasteners from the air springs using **HAND TOOLS** only.
8. Remove the lower air spring mounting bracket from the cross tube.
9. Remove the fasteners and gusset (if equipped) from the upper air spring mounting bracket and the frame, see Figure 8-1. Discard fasteners.
10. Remove the air spring.

ASSEMBLY

1. Inspect the mounting surfaces and lower air spring mounting bracket for any damage, replace if necessary.

⚠ WARNING

FAILURE TO PRESS THE AIR SPRING AGAINST THE UNDERSIDE OF THE FRAME WHILE TIGHTENING THE UPPER AIR SPRING BRACKET CAN RESULT IN COMPONENT DAMAGE AND PERSONAL INJURY OR PROPERTY DAMAGE.

2. Hold the upper air spring bracket tight against the frame flange. Attach gusset (if equipped) and tighten the upper air spring mounting fastener per original equipment manufacturer's specifications.
3. Install the air spring between the frame and the cross tube, see Figure 8-2.
   a. **PRIMAAX EX • FIREMAAX EX** — Ensure the **air spring slot** in the bottom of the air spring engages the **beam notch** on the top of the support beam.
   b. **PRIMAAX • FIREMAAX** — Ensure the **V notch** in the end cap engages the air spring **locator tab** on the air spring.
4. Install the lower air spring mounting bracket around the cross tube, engaging the mounting air spring studs, see Figure 8-2.
5. Using **HAND TOOLS** only, install the lower mounting fasteners and tighten to 25 ± 5 foot pounds torque, see Figure 8-2.

FIGURE 8-2

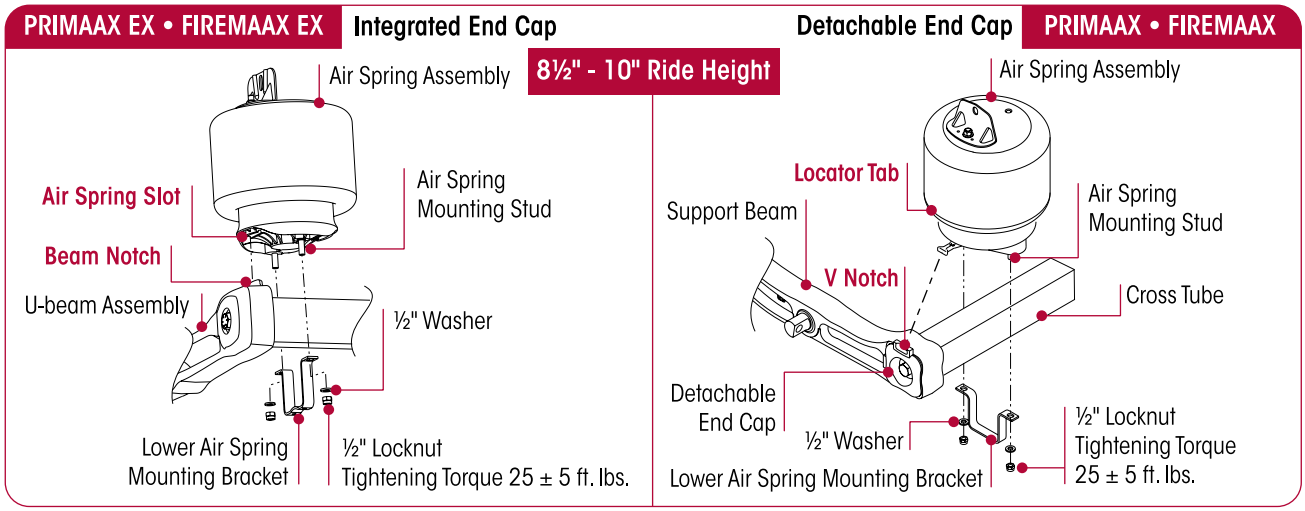

6. Install the air line fitting to the air spring using Teflon (or equivalent) thread seal.
7. Connect the air line to the air spring.
8. See additional Air Spring Cautions and Warnings in the Important Safety Notice Section of this publication prior to deflating or inflating the air system.
9. Inflate the suspension slowly and verify that the air spring bladder inflates uniformly without binding.
10. Reconnect the height control linkage assembly to the height control valve arm.
11. Remove the frame supports.
12. Remove the wheel chocks.
13. Verify proper ride height adjustment, see ride height adjustment in the Preventive Maintenance Section of this publication.

AIR SPRING / UPPER AIR SPRING BRACKET

■ 12½", 14⅜" and 15½" Ride Height

DISASSEMBLY

1. Chock the wheels of the vehicle.

⚠ WARNING

PRIOR TO AND DURING DEFLATION AND INFLATION OF THE AIR SUSPENSION SYSTEM, ENSURE THAT ALL PERSONNEL AND EQUIPMENT ARE CLEAR FROM UNDER THE VEHICLE AND AROUND THE SERVICE AREA, FAILURE TO DO SO CAN CAUSE SERIOUS PERSONAL INJURY, DEATH, OR PROPERTY DAMAGE.

2. See additional Air Spring Cautions and Warnings in the Important Safety Notice Section of this publication prior to deflating or inflating the air system.
3. Disconnect the height control linkage assembly from the height control valve arm by sliding the rubber grommet off the height control valve arm's stud. Lower the height control valve arm(s) to exhaust the air in the air springs and deflate the rear suspension.

⚠ WARNING

SOME VEHICLE APPLICATIONS, SUCH AS VEHICLES EQUIPPED WITH OUTRIGGERS, RETAIN SOME AIR PRESSURE IN THE AIR SPRINGS AT ALL TIMES. PRIOR TO PERFORMING ANY MAINTENANCE, SERVICE, OR REPAIR OF THE SUSPENSION, VERIFY EACH AIR SPRING IS COMPLETELY DEFLATED. FAILURE TO DO SO COULD RESULT SERIOUS PROPERTY DAMAGE AND/OR SEVERE PERSONAL INJURY.

4. Remove the air lines from the air spring.
5. Remove the air line fitting from the air spring.

⚠ CAUTION

IF THE AIR SPRING IS BEING REMOVED FOR AN ALTERNATE REPAIR, IT IS MANDATORY TO LUBRICATE THE LOWER AIR SPRING FASTENERS WITH PENETRATING OIL AND REMOVE WITH HAND TOOLS TO PREVENT DAMAGE TO THE LOWER AIR SPRING MOUNTING STUD. FAILURE TO DO SO CAN CAUSE COMPONENT DAMAGE AND VOID WARRANTY.

6. If the air spring is being removed for an alternate repair it will be necessary to clean and lubricate the lower mounting fasteners with penetrating oil. This will help prevent the air spring mounting studs from breaking during the removal process. Remove the lower mounting fasteners from the air springs using **HAND TOOLS** only.
7. Remove the lower air spring mounting bracket from the cross tube.
8. Remove and discard the fasteners securing the air spring to the upper air spring bracket assembly.
9. Remove the air spring.
10. Remove and discard the fasteners securing the upper air spring bracket assembly to the frame rail. If equipped, remove the air spring support bracket.
11. Inspect the upper air spring bracket assembly, air spring support bracket (if equipped), mounting surfaces and lower air spring mounting bracket for any damage. Replace as necessary.

ASSEMBLY

1. Loosely attach the upper air spring bracket assembly to the frame rail.
2. If equipped, loosely attach the air spring support bracket to the upper air spring bracket assembly and the frame fastener.
3. Press the upper air spring bracket assembly against the underside of the frame and tighten the frame fasteners to the proper torque per the original equipment manufacturers specifications.

⚠ WARNING

FAILURE TO PRESS THE UPPER AIR SPRING BRACKET ASSEMBLY AGAINST THE UNDERSIDE OF THE FRAME WHILE TIGHTENING THE UPPER AIR SPRING FASTENERS CAN RESULT IN COMPONENT DAMAGE AND PERSONAL INJURY OR PROPERTY DAMAGE.

4. If equipped, tighten the fastener attaching the air spring support bracket to the upper air spring bracket assembly. Tighten the fastener to proper specifications.

5. Attach the air spring to the upper air spring bracket assembly and tighten the locknuts to proper torque specifications, see Torque Specification Section in this publication.
6. Install the air spring between the frame and the cross tube.
   a. **PRIMAAX EX•FIREMAAX EX:** Ensure the **air spring slot** in the bottom of the air spring engages the **beam notch** on the top of the beam, see Figure 8-3.
   b. **PRIMAAX•FIREMAAX:** Ensure the **V notch** in the end cap engages the air spring **locator tab** on the air spring, see Figure 8-4.
7. Install the lower air spring mounting bracket around the cross tube, engaging the mounting air spring studs, see Figures 8-3 and 8-4.
8. Using **HAND TOOLS** only, install the lower mounting locknuts and tighten to 25 ± 5 foot pounds torque, see Figures 8-3 and 8-4.
9. Install the air line fitting to the air spring using Teflon (or equivalent) thread seal.

FIGURE 8-3

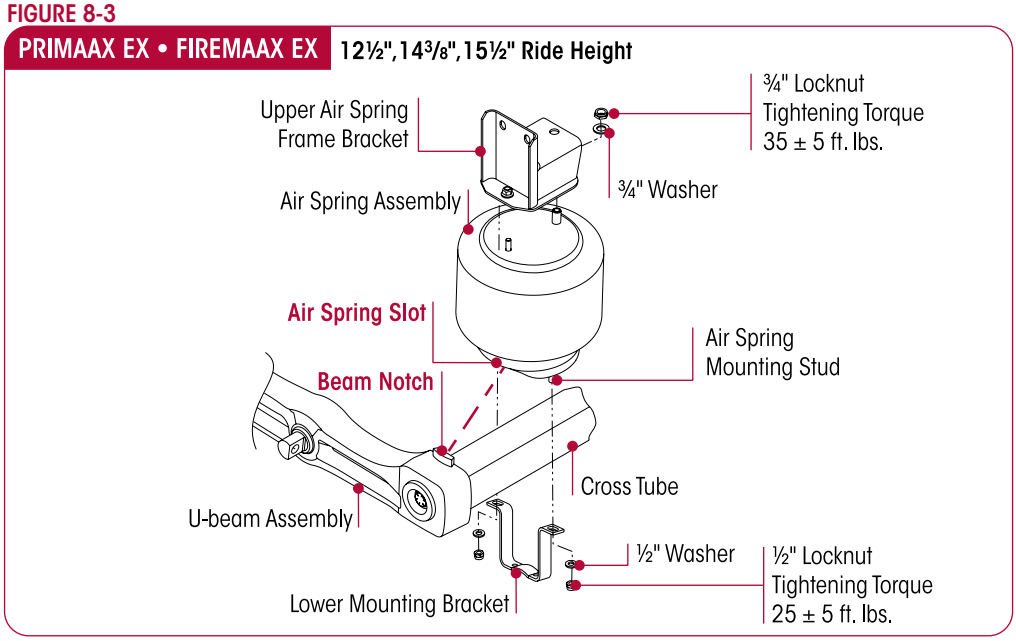

FIGURE 8-4

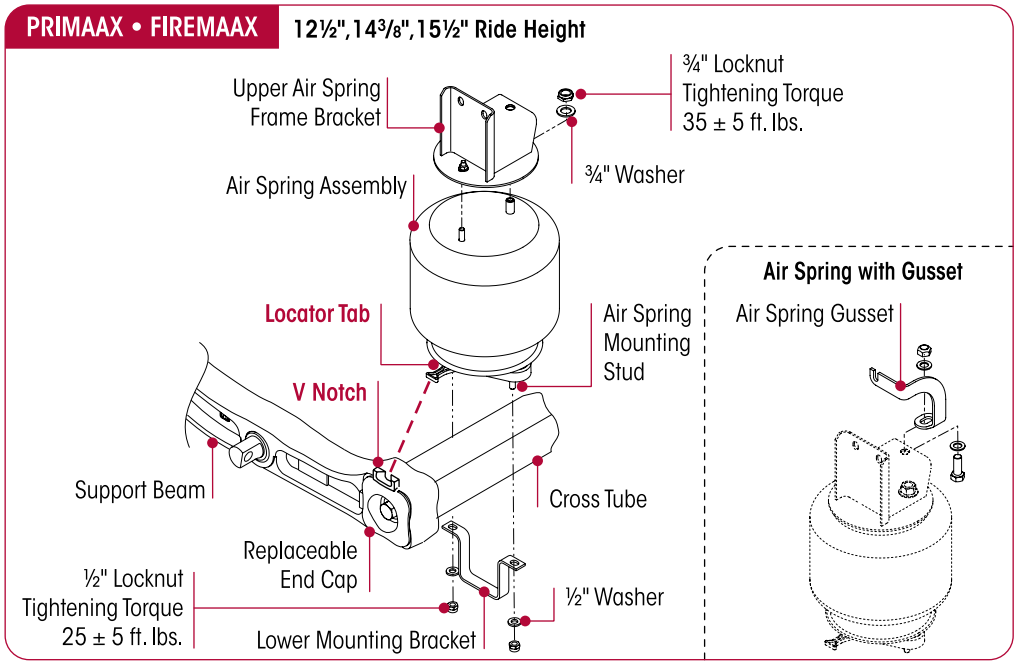

10. Connect the air line to the air spring.

WARNING

PRIOR TO AND DURING DEFLATION AND INFLATION OF THE AIR SUSPENSION SYSTEM, ENSURE THAT ALL PERSONNEL AND EQUIPMENT ARE CLEAR FROM UNDER THE VEHICLE AND AROUND THE SERVICE AREA, FAILURE TO DO SO CAN CAUSE SERIOUS PERSONAL INJURY, DEATH, OR PROPERTY DAMAGE.

11. See additional Air Spring Cautions and Warnings in the Important Safety Notice Section of this publication prior to deflating or inflating the air system.
12. Inflate the suspension slowly and verify that the air spring bladder inflates uniformly without binding.
13. Reconnect the height control linkage assembly to the height control valve arm.
14. Remove the frame supports.
15. Verify proper ride height. Refer to the Alignment & Adjustments Section of this publication.
16. Remove the wheel chocks.

HEIGHT CONTROL VALVE

NOTE This procedure is for servicing a height control valve supplied by Hendrickson. Contact the vehicle manufacturer for instructions when servicing a non-Hendrickson height control valve.

DISASSEMBLY

1. Chock the wheels of the vehicle.

WARNING

PRIOR TO AND DURING DEFLATION AND INFLATION OF THE AIR SUSPENSION SYSTEM, ENSURE THAT ALL PERSONNEL AND EQUIPMENT ARE CLEAR FROM UNDER THE VEHICLE AND AROUND THE SERVICE AREA, FAILURE TO DO SO CAN CAUSE SERIOUS PERSONAL INJURY, DEATH, OR PROPERTY DAMAGE.

2. See additional Air Spring Cautions and Warnings in the Important Safety Notice Section of this publication prior to deflating or inflating the air system.
3. Disconnect the height control linkage assembly from the height control valve arm by sliding the rubber grommet off the height control valve arm's stud. Lower the height control valve arm(s) to exhaust the air in the air springs and deflate the rear suspension.

WARNING

SOME VEHICLE APPLICATIONS, SUCH AS VEHICLES EQUIPPED WITH OUTRIGGERS, RETAIN SOME AIR PRESSURE IN THE AIR SPRINGS AT ALL TIMES. PRIOR TO PERFORMING ANY MAINTENANCE, SERVICE, OR REPAIR OF THE SUSPENSION, VERIFY EACH AIR SPRING IS COMPLETELY DEFLATED. FAILURE TO DO SO COULD RESULT SERIOUS PROPERTY DAMAGE AND/OR SEVERE PERSONAL INJURY.

FIGURE 8-5

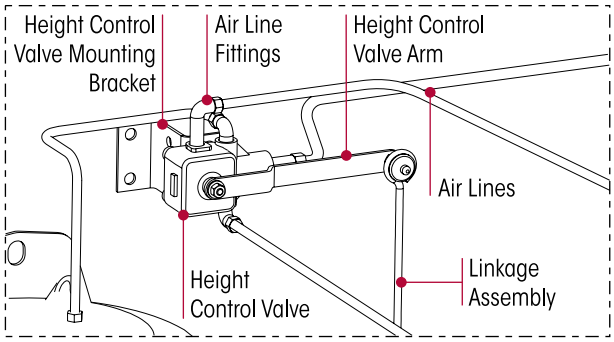

4. Remove the air lines from the height control valve.
5. Remove and discard the locknut fasteners that attach the height control valve to the frame mounting bracket. **DO NOT** back out the studs from the height control valve body. Loosening the studs may cause the height control valve to leak.
6. Remove the height control valve, see Figure 8-5.
7. Remove the air line fittings from the height control valve.

ASSEMBLY

1. Install the air line fittings into the height control valve using Teflon (or equivalent) thread seal.
2. Install the height control valve to the frame mounting bracket by attaching the ¼" washers and locknuts. Tighten to 9 ± 1 foot pounds torque.
3. Install the air lines to the height control valve. Refer to the Plumbing Diagrams Section of this publication.
4. See additional Air Spring Cautions and Warnings in the Important Safety Notice Section of this publication prior to deflating or inflating the air system.
5. Inflate the suspension slowly and verify that the air spring bladder inflates uniformly without binding.
6. Reconnect the height control linkage assembly to the height control valve arm.
7. Verify proper ride height adjustment, see Ride Height Adjustment in the Preventive Maintenance Section of this publication.
8. Remove the wheel chocks.

SHOCK ABSORBER

DISASSEMBLY

1. Chock the wheels of the vehicle.

NOTE If removal of the height control valve linkage bracket is necessary for shock absorber replacement, mark the position of the linkage bracket to facilitate reinstallation.

2. Remove and discard the **lower** shock absorber mounting fasteners and, if necessary, the height control valve linkage bracket, see Figure 8-6.
3. Remove and discard the **upper** shock absorber mounting fasteners.
4. Slide the shock absorber out of the **upper** mounting brackets.
5. Inspect the shock absorber mounting brackets and hardware for damage or wear. Replace if necessary.

FIGURE 8-6

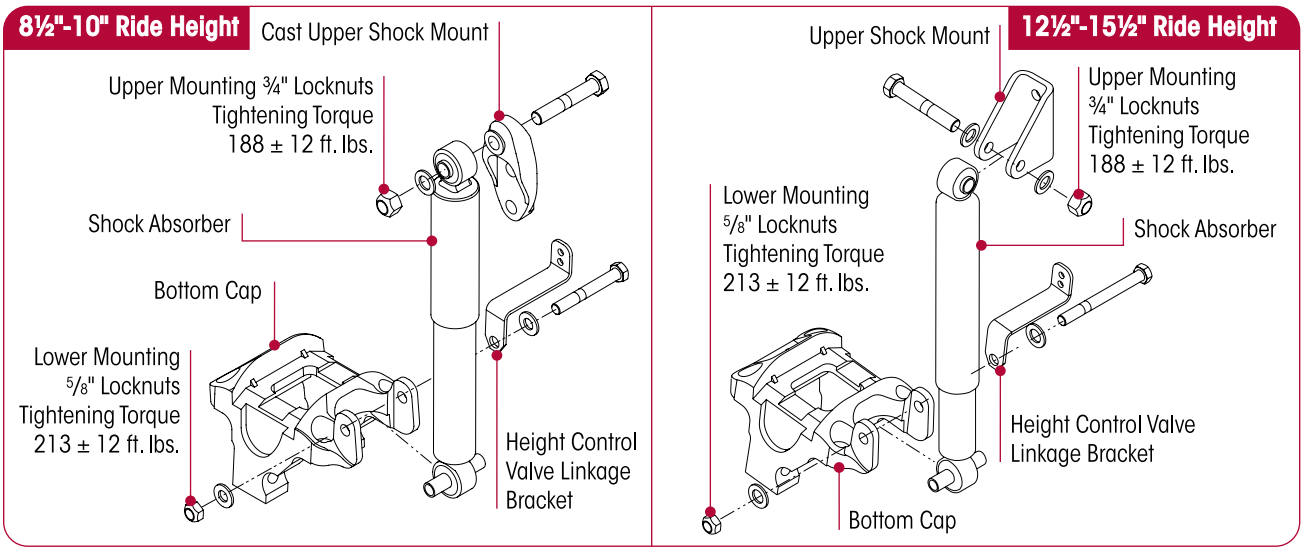

ASSEMBLY

1. Install the upper shock absorber mounting bracket (if removed).
2. Install the shock absorber into the upper mounting bracket.
3. Install the upper shock absorber mounting fasteners.

CAUTION

ON THE SUSPENSION MODELS USING THE CAST UPPER SHOCK BRACKET (PART NO. 67463-002) THE UPPER SHOCK BOLT MUST BE INDEXED INTO THE RECESSED HEX BORE OF THE UPPER SHOCK MOUNTING BRACKET FOR PROPER FASTENER INSTALLATION. FAILURE TO DO SO CAN CAUSE THE SHOCK FASTENERS TO BECOME LOOSE AND CAUSE PREMATURE COMPONENT DAMAGE.

4. Slide the lower shock absorber mount into the bottom cap.
5. Install the lower shock absorber mounting fasteners and height control valve linkage bracket (if removed).
6. Tighten the upper shock absorber mounting locknut to 188 ± 12 foot pounds torque, see Figure 8-6.
7. Tighten the lower shock absorber mounting locknut to 213 ± 12 foot pounds torque, see Figure 8-6.
8. If the height control valve linkage bracket was removed, verify the vehicle ride height. Refer to the Alignment & Adjustments Section of this publication.
9. Remove the wheel chocks.

TRANSVERSE TORQUE ROD

WARNING

PRIMAAX EX • FIREMAAX EX | PRIMAAX • FIREMAAX SUSPENSIONS INCORPORATE TRANSVERSE TORQUE RODS FOR VEHICLE STABILITY. IF THESE COMPONENTS ARE DISCONNECTED OR ARE NON-FUNCTIONAL THE VEHICLE SHOULD NOT BE OPERATED. FAILURE TO DO SO CAN RESULT IN ADVERSE VEHICLE HANDLING AND POSSIBLE TIRE CONTACT WITH THE FRAME OR THE SUSPENSION.

NOTE

Some torque rods assemblies equipped on the PRIMAAX EX • FIREMAAX EX | PRIMAAX • FIREMAAX suspension have curled end hubs and are not re-bushable. The entire torque rod assembly must be replaced. This feature provides superior bushing retention in the torque rod end hub.

- These torque rods can be identified by the part number **67428**-XXX or the suffix N after any part number (i.e. **62000-615**N)

DISASSEMBLY

1. Chock the wheels of the vehicle.

SERVICE HINT

Note the quantity and location of shims removed to maintain the lateral alignment of the axle during assembly. See Alignment & Adjustments Section of this publication.

2. Remove and discard the torque rod mounting fasteners.
3. Remove the transverse torque rod.
4. Inspect the mounting surfaces for any wear or damage. Repair or replace as necessary.

ASSEMBLY

1. Install the transverse torque rod.
2. Install the mounting fasteners and any shims that were removed.

NOTE

Hendrickson recommends using Grade 8 bolts and Grade C locknuts for all torque rod attachments.

3. Prior to tightening, ensure that the vehicle is at the proper ride height. Tighten all fasteners to the required torque specification. Refer to original equipment manufacturer for specifications.

4. Check the lateral alignment. If not within vehicle manufacturer's specified range, a lateral alignment is necessary. See Lateral Alignment in the Alignment & Adjustments Section of this publication.
5. Remove the wheel chocks.

LONGITUDINAL TORQUE ROD

■ *PRIMAAX EX • FIREMAAX EX

*See Longitudinal Torque Rod PRIMAAX • FIREMAAX for previous model in this section.

NOTE Some torque rods assemblies equipped on the PRIMAAX EX • FIREMAAX EX | PRIMAAX • FIREMAAX suspension have curled end hubs and are not re-bushable. The entire torque rod assembly must be replaced. This feature provides superior bushing retention in the torque rod end hub.

- These torque rods can be identified by the part number **67428**-XXX or the suffix N after any part number (i.e. **62000-615**N)

DISASSEMBLY

1. Chock the wheels of the vehicle.

SERVICE HINT Note the quantity of shims removed to maintain the correct pinion angle of the axle at assembly. See Alignment & Adjustments Section of this publication.

2. Remove and discard the fasteners and shims (if equipped) that connect the longitudinal torque rod to frame hanger, see Figure 8-7.
3. Remove and discard the fasteners that connect the longitudinal torque rod to top pad, see Figure 8-7.
4. Remove the longitudinal torque rod.
5. Inspect the mounting surfaces for any wear or damage, replace if necessary.

FIGURE 8-7

PRIMAAX EX 23K•46K•69K | FIREMAAX EX 24K•48K Shown

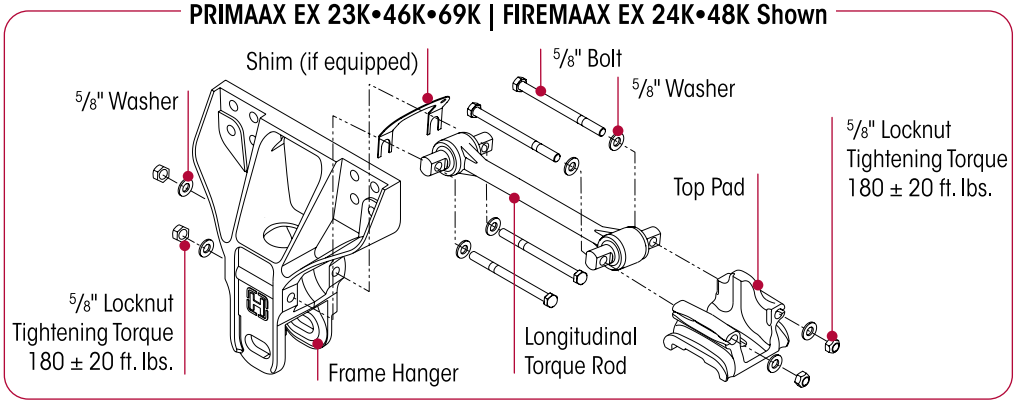

ASSEMBLY

1. Install the longitudinal torque rod.
2. Install the fasteners and any shims that were removed, see Figure 8-7.

NOTE Hendrickson recommends the use of Grade 8 bolts and Grade C locknuts be used for all torque rod attachments.

NOTE It is mandatory to have the vehicle at proper ride height prior to tightening the ¾" straddle bushing and the ⅞" top pad through bolt locknuts to torque specifications.

3. Tighten all fasteners to the required specification, see Torque Specifications Section of this publication.

4. When assembly is complete check the drive axle pinion angles, see the Alignment & Adjustments Section of this publication.
5. Remove the wheel chocks.

FIGURE 8-8

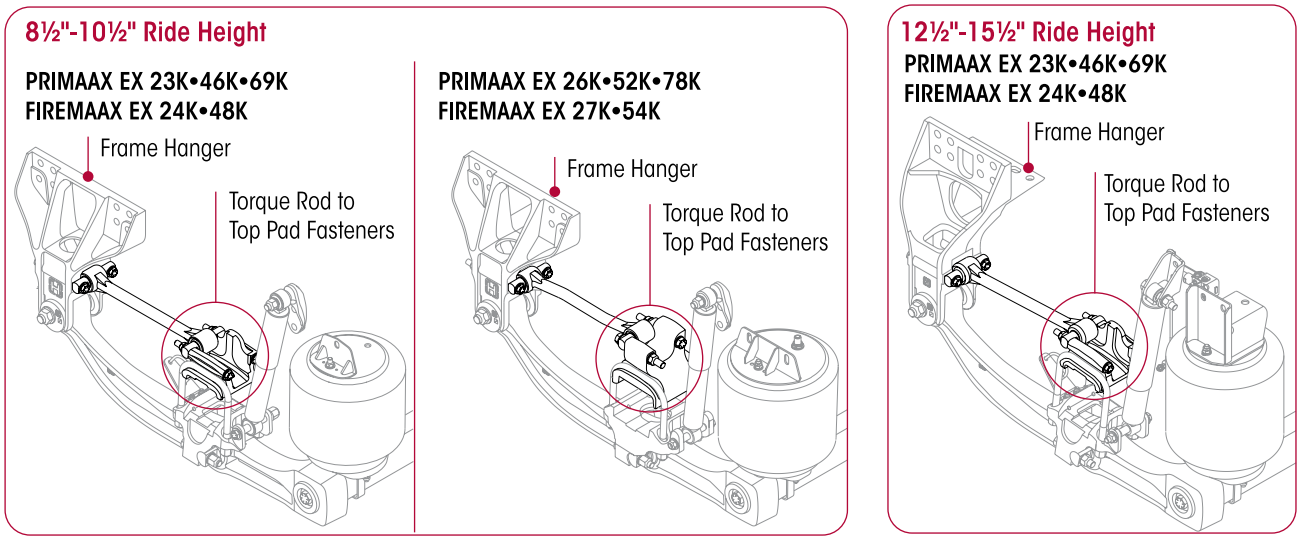

LONGITUDINAL TORQUE ROD

■ PRIMAAX • FIREMAAX

NOTE

Some torque rods assemblies equipped on the PRIMAAX EX • FIREMAAX EX | PRIMAAX • FIREMAAX suspension have curled end hubs and are not re-bushable. The entire torque rod assembly must be replaced. This feature provides superior bushing retention in the torque rod end hub.

- These torque rods can be identified by the part number **67428**-XXX or the suffix N after any part number (i.e. **62000-615**N)

FIGURE 8-9

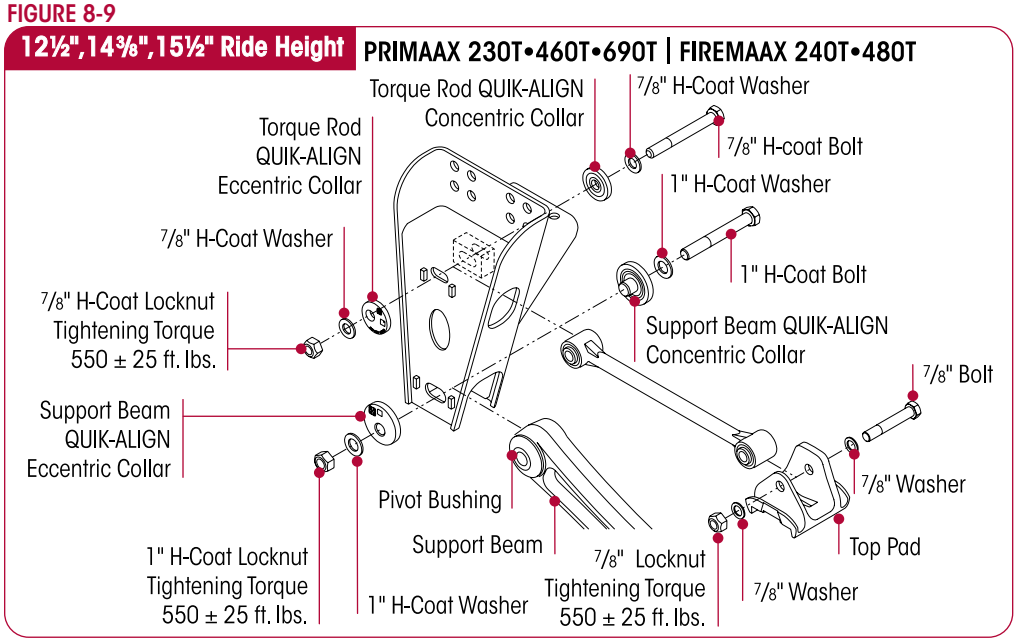

SERVICE HINT

Mark the position of the longitudinal torque rod's QUIK-ALIGN square drive in relationship to the frame hanger prior to loosening the connection. This will facilitate the setting of the axle pinion angle during assembly.

DISASSEMBLY

1. Chock the wheels of the vehicle.
2. Remove and discard the torque rod mounting fasteners.
3. Remove the torque rod, see Figure 8-9.
4. Inspect the mounting surfaces for any wear or damage.

ASSEMBLY

1. Install the torque rod.
2. Install new mounting fasteners, ensure the bolt head and concentric QUIK-ALIGN collar are on the inboard side of the frame hanger.

WARNING

DISCARD USED QUIK-ALIGN FASTENERS. ALWAYS USE NEW QUIK-ALIGN FASTENERS TO COMPLETE A REPAIR. FAILURE TO DO SO COULD RESULT IN FAILURE OF THE PART, OR MATING COMPONENTS, ADVERSE VEHICLE HANDLING, PERSONAL INJURY, OR PROPERTY DAMAGE.

WARNING

DO NOT ASSEMBLE QUIK-ALIGN JOINT WITHOUT THE PROPER FASTENERS. USE ONLY H-COATED FASTENERS TO SUSTAIN PROPER CLAMP FORCE. FAILURE TO DO SO CAN CAUSE ADVERSE VEHICLE HANDLING, PROPERTY DAMAGE OR PERSONAL INJURY AND VOID WARRANTY. ENSURE THAT THE QUIK-ALIGN FASTENER'S TORQUE VALUES ARE SUSTAINED AS RECOMMENDED IN THE TORQUE SPECIFICATIONS SECTION OF THIS PUBLICATION. FAILURE TO DO SO CAN CAUSE ADVERSE VEHICLE HANDLING RESULTING IN PERSONAL INJURY OR PROPERTY DAMAGE. FOLLOW VEHICLE MANUFACTURER'S FASTENER ORIENTATION WHEN PERFORMING ANY MAINTENANCE, SERVICE OR REPAIR.

NOTE

It is mandatory to have the vehicle at proper ride height prior to tightening the torque rod mounting fasteners, see the Alignment & Adjustments Section of this publication.

3. Tighten all fasteners to the required specification, see Figure 8-9.
4. After assembly is complete, verify the drive axle pinion angles are within the vehicle manufacturer's specifications, see the Alignment & Adjustments Section of this publication.
5. Remove the wheel chocks.

TORQUE ROD BUSHING

NOTE

Some torque rods assemblies equipped on the PRIMAAX EX • FIREMAAX EX | PRIMAAX • FIREMAAX suspension have curled end hubs and are not re-bushable. The entire torque rod assembly must be replaced. This feature provides superior bushing retention in the torque rod end hub.

- These torque rods can be identified by the part number **67428**-XXX or the suffix N after any part number (i.e. **62000-615**N)

You will need:

- A vertical press with a capacity of at least 10 tons
- A receiving, installation, and funnel tool, see the Special Tools Section of this publication for shop made tool specifications

DISASSEMBLY

FIGURE 8-10

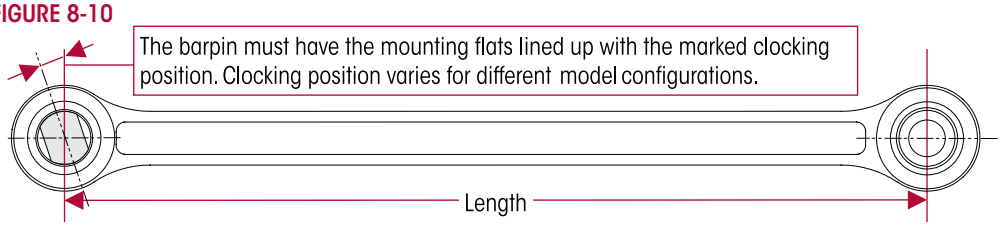

CAUTION DO NOT USE HEAT OR USE A CUTTING TORCH TO REMOVE THE BUSHINGS FROM THE TORQUE ROD. THE USE OF HEAT WILL ADVERSELY AFFECT THE STRENGTH OF THE TORQUE ROD; HEAT CAN CHANGE THE MATERIAL PROPERTIES. A COMPONENT DAMAGED IN THIS MANNER CAN RESULT IN THE ADVERSE VEHICLE HANDLING, POSSIBLE PERSONAL INJURY OR PROPERTY DAMAGE AND VOID WARRANTY.

SERVICE HINT When servicing a straddle mount bar pin type bushing assembly, mark the clocking position of the straddle mount bar pin flats on the torque rod end hub before disassembly. This clocking mark will serve as a guide when installing the new bushing assembly so the original clocking position can be retained.

1. Remove the torque rod as detailed in this section.
2. When replacing a straddle mount bar pin type bushing assembly, mark the clocking position of the bushing assembly's bar pin flats with a paint stick on the torque rod end hub prior to disassembly. Clocking varies for different model configurations, see Figure 8-10.
3. Install the torque rod in the press. Support the torque rod end on the receiving tool with the end of the torque rod centered on the tool. Be sure the torque rod is squarely supported on the press bed.
4. Push directly on the inner metal of the bushing assembly until the bushing assembly clears the torque rod end tube.
5. Clean and inspect the inner diameter of the torque rod ends.

ASSEMBLY

NOTE **DO NOT** use a petroleum or soap base lubricant. Such lubricants can cause adverse reactions with the bushing, such as deterioration of the rubber, causing premature failure.

1. Lubricate the inner diameter of the torque rod end hub and the new rubber bushing with light Naphthenic Base Oil, such as 60 SUS at 100°F, see Figure 8-11.
2. Support the torque rod end tube on the receiving tool with the end tube of the torque rod centered on the receiving tool.

NOTE When replacing a straddle mount bar pin type bushing assembly, verify the correct clocking position of the straddle mount bar pin flats prior to installing the bushing assembly in the torque rod end hub.

FIGURE 8-11

FIGURE 8-12

FIGURE 8-13

3. Center the new bushing assembly on the torque rod end hub. When installing a straddle mount type bushing assembly, verify the bushing assembly's bar pin flats are clocked correctly.
4. Press directly on the inner metal of the bushing assembly. The rubber bushings of the bar pin must be centered within the torque rod end tubes.
5. When pressing in the new bushings overshoot the desired final position by approximately 3/16", see Figure 8-12.
6. Press the inner metal of the bushing assembly again from opposite side to center the bushing and inner metal within the torque rod end tube, see Figure 8-13.
7. Wipe off excess lubricant. Allow the lubricant **four hours** to dissipate before operating vehicle.
8. Install the torque rod assembly as detailed in this section.

CAUTION IF THE TORQUE ROD ASSEMBLY IS NOT ALLOWED THE ALLOTTED TIME FOR THE LUBRICANT TO DISSIPATE, THE BUSHING MAY SLIDE FROM THE TORQUE ROD END TUBE. THE BUSHING WILL THEN NEED TO BE REMOVED AND A NEW BUSHING RE-INSTALLED.

SUPPORT BEAM ASSEMBLY AND CROSS TUBE

NOTE Effective May 2010, the support beam assembly part numbers 66435-00X or 60831-00X (Forging Part Nos. 59363-001, 65082-000, 65284-000), cross tube, and previous U-beam Assembly Part Nos. with the prefix 66659-XXX, for PRIMAAX•FIREMAAX suspension systems were discontinued, see Figure 8-14.

The U-beam Assembly with integrated end caps, see Figure 8-15, is now a required replacement for any PRIMAAX•FIREMAAX support beam or cross tube component. Refer to the Support Beam and Cross Tube Replacement Guide Table in the Parts List Section of this publication.

FIGURE 8-14

FORMER SUPPORT BEAM ASSEMBLY

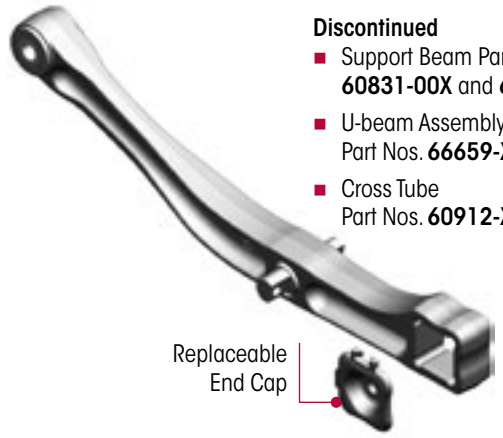

Discontinued

- Support Beam Part Nos. **60831-00X** and **66435-00X**
- U-beam Assembly Part Nos. **66659-XXX**
- Cross Tube Part Nos. **60912-XXX**

FIGURE 8-15

REPLACEMENT U-BEAM ASSEMBLY KIT

Replacement

- U-beam Assembly Service Kit No. **60961-XXX**

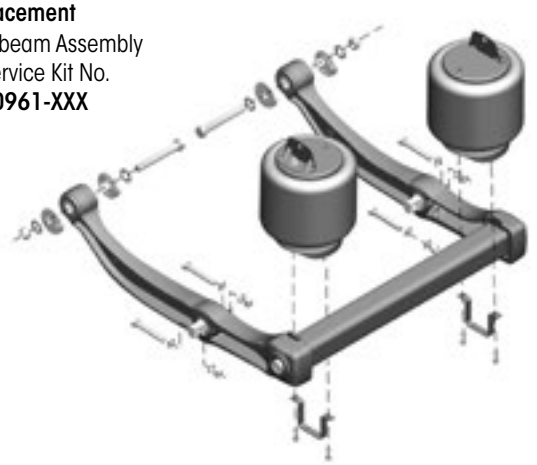

U-BEAM ASSEMBLY

IMPORTANT NOTICE As of September 2010, Hendrickson introduced the new enhanced U-beam assembly design for PRIMAAX EX•FIREMAAX EX suspensions equipped on new production vehicles and for the Aftermarket. The new U-beam assembly results in a maintenance-free integrated end cap connection. Refer to the Preventive Maintenance Section of this publication.

DISASSEMBLY

1. Chock the front wheels.
2. Support the frame at ride height.
3. Raise and support the axle being serviced. Remove the wheels.
4. Disconnect the height control valve linkage assembly from the height control valve arm(s), see vehicle manufacturer's instructions.

WARNING PRIOR TO AND DURING DEFLATION AND INFLATION OF THE AIR SUSPENSION SYSTEM, ENSURE THAT ALL PERSONNEL AND EQUIPMENT ARE CLEAR FROM UNDER THE VEHICLE AND AROUND THE SERVICE AREA, FAILURE TO DO SO CAN CAUSE SERIOUS PERSONAL INJURY, DEATH, OR PROPERTY DAMAGE.

WARNING SOME VEHICLE APPLICATIONS, SUCH AS VEHICLES EQUIPPED WITH OUTRIGGERS, RETAIN SOME PRESSURE IN THE AIR SPRINGS AT ALL TIMES. PRIOR TO PERFORMING ANY MAINTENANCE, SERVICE, OR REPAIR OF THE SUSPENSION, VERIFY EACH AIR SPRING IS COMPLETELY DEFLATED. FAILURE TO DO SO COULD RESULT IN SERIOUS PROPERTY DAMAGE AND/OR SEVERE PERSONAL INJURY.

5. See additional Air Spring Cautions and Warnings in the Important Safety Notice Section of this publication prior to deflating or inflating the air system.
6. Lower the height control valve arm(s) to exhaust the air in the air springs and deflate the rear suspension.

CAUTION

IF THE AIR SPRING IS BEING REMOVED FOR AN ALTERNATE REPAIR, IT IS MANDATORY TO LUBRICATE THE LOWER AIR SPRING FASTENERS WITH PENETRATING OIL AND REMOVE WITH HAND TOOLS TO PREVENT DAMAGE TO THE LOWER AIR SPRING MOUNTING STUD. FAILURE TO DO SO CAN CAUSE COMPONENT DAMAGE AND VOID WARRANTY.

7. Lubricate the lower mounting fasteners of the air springs with penetrating oil. This will help prevent the air spring mounting studs from breaking during the removal process.
8. Remove and discard the lower mounting fasteners from the air springs using **HAND TOOLS** only.
9. Remove both the lower air spring mounting brackets to disconnect both air springs from the cross tube, see Figure 8-16.

FIGURE 8-16

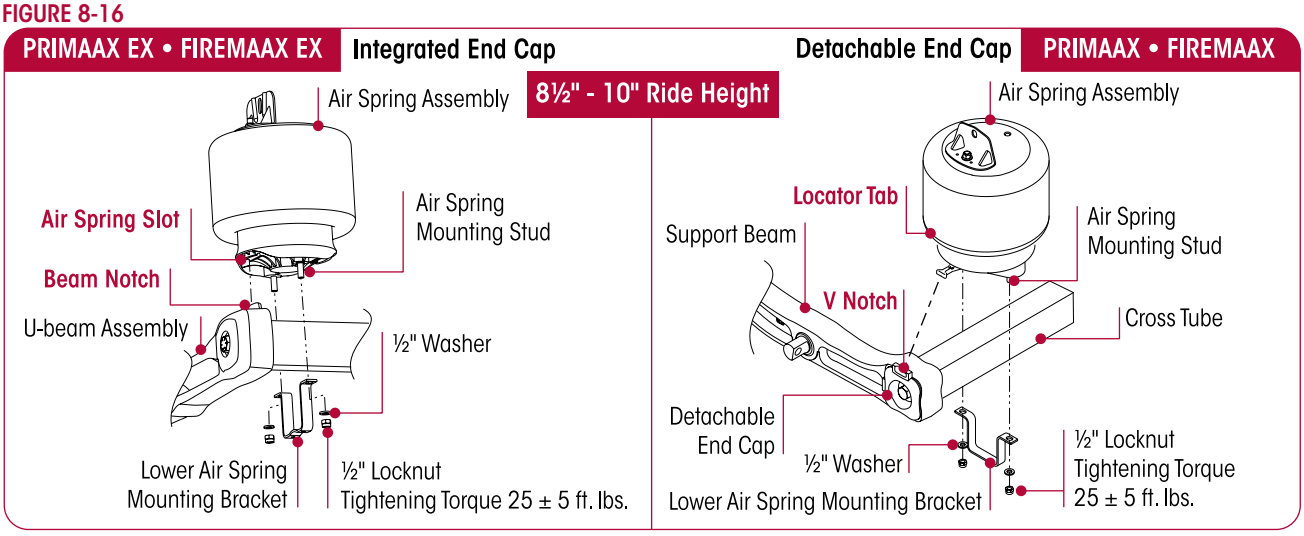

WARNING

IT IS MANDATORY TO USE A FLOOR JACK EQUIPPED WITH A FOUR INCH CONTACT PLATE TO SUPPORT THE U-BEAM ASSEMBLY AT THE CROSS TUBE TO FACILITATE SAFE LOWERING AND RAISING OF THE U-BEAM ASSEMBLY. DO NOT USE A BOTTLE JACK. A BOTTLE JACK DOES NOT HAVE ENOUGH CONTACT AREA AND CAN BE UNSTABLE. FAILURE TO DO SO CAN CAUSE COMPONENT DAMAGE OR RESULT IN PERSONAL INJURY.

10. Install a floor jack with a 4" contact plate to support the U-beam assembly at the cross tube.

SERVICE HINT

Each frame hanger will have a pair of QUIK-ALIGN collars. Note which type of QUIK-ALIGN collar is removed from which frame hanger location to facilitate the assemble process. Any eccentric (with the square drive feature) QUIK-ALIGN collar should be mounted on the outboard side of the frame hanger. Axle thrust angles can only be corrected on frame hangers equipped with eccentric QUIK-ALIGN collars.

11. Mark the position of the QUIK-ALIGN square drive in relationship to the frame hanger prior to loosening the QUIK-ALIGN connection. This will facilitate the axle alignment process after the repair is complete.
12. Loosen both the QUIK-ALIGN fasteners, **DO NOT** remove at this time.
13. Remove and discard D-pin fasteners on both sides of the suspension.

SERVICE HINT

It may be necessary to rotate the QUIK-ALIGN eccentric collars to allow the full disengagement of the D-pins into the bottom caps.

SERVICE HINT

It may be necessary to raise the front of the differential to allow the D-pins to disengage the bottom caps.

WARNING THE WEIGHT OF THE U-BEAM ASSEMBLY IS APPROXIMATELY 225 POUNDS. CARE SHOULD BE TAKEN AT REMOVAL AND INSTALLATION TO PREVENT PERSONAL INJURY OR DAMAGE TO COMPONENTS.

14. Lower the floor jack and pivot the U-beam assembly down.
15. Remove and discard the QUIK-ALIGN fasteners.
16. Remove QUIK-ALIGN eccentric and concentric collars.

NOTE It may be necessary to use a pry bar to push the U-beam assembly out of the frame hangers.

17. Remove the U-beam assembly from the hangers.
18. Remove the U-beam assembly from the vehicle.
19. Inspect the U-beam assembly for any damage or wear and replace as necessary.

ASSEMBLY

1. Clean the QUIK-ALIGN slots in the hangers and collars of any dirt and debris and inspect for any wear or damage. Replace as necessary.
2. Prior to installing the U-beam assembly, verify the clamp group is tightened to the proper torque.

WARNING THE WEIGHT OF THE U-BEAM ASSEMBLY IS APPROXIMATELY 225 POUNDS. CARE SHOULD BE TAKEN AT REMOVAL AND INSTALLATION TO PREVENT PERSONAL INJURY OR DAMAGE TO COMPONENTS.

3. Install the U-beam assembly into the frame hangers.

WARNING DISCARD USED QUIK-ALIGN FASTENERS. ALWAYS USE NEW QUIK-ALIGN FASTENERS TO COMPLETE A REPAIR. FAILURE TO DO SO COULD RESULT IN FAILURE OF THE PART, OR MATING COMPONENTS, ADVERSE VEHICLE HANDLING, PERSONAL INJURY, OR PROPERTY DAMAGE.

WARNING DO NOT ASSEMBLE QUIK-ALIGN JOINT WITHOUT THE PROPER FASTENERS. USE ONLY H-COATED FASTENERS TO SUSTAIN PROPER CLAMP FORCE. FAILURE TO DO SO CAN CAUSE ADVERSE VEHICLE HANDLING, PROPERTY DAMAGE OR PERSONAL INJURY AND VOID WARRANTY. ENSURE THAT THE QUIK-ALIGN FASTENER'S TORQUE VALUES ARE SUSTAINED AS RECOMMENDED IN THE TORQUE SPECIFICATIONS SECTION OF THIS PUBLICATION. FAILURE TO DO SO CAN CAUSE ADVERSE VEHICLE HANDLING RESULTING IN PERSONAL INJURY OR PROPERTY DAMAGE. FOLLOW VEHICLE MANUFACTURER'S FASTENER ORIENTATION WHEN PERFORMING ANY MAINTENANCE, SERVICE OR REPAIR.

NOTE Use a new QUIK-ALIGN pivot bolt kit (see the Parts List Section of this publication) for any axle alignment or disassembly of the QUIK-ALIGN connection. This will help ensure that the proper clamp load is applied to the connection and help prevent the joint to slip in service.

4. Verify the correct QUIK-ALIGN collar (eccentric/concentric) is in the correct location as noted in the disassembly procedure.
5. Install QUIK-ALIGN connection with new Hendrickson fasteners and snug to about 50-100 foot pounds torque, **DO NOT** tighten at this time. The final torque must be done after the alignment is complete.
6. Position the U-beam assembly on a floor jack.
7. Raise the U-beam assembly until the D-pins engage in the bottom cap.

SERVICE HINT It may be necessary to rotate the QUIK-ALIGN eccentric collars to allow the full engagement of the D-pins into the bottom caps.

SERVICE HINT It may be necessary to raise or lower the front of the differential to allow the D-pins to engage in the bottom cap. Use a drift pin if necessary to align the D-pins with the bottom cap.

8. Install the D-pin fasteners from front to back, see Figure 8-17.
9. Remove the floor jack supporting the U-beam assembly.
10. Tighten D-Pin fasteners to 300 ± 25 foot pounds torque.
11. Install the air spring between the frame and the cross tube, see Figure 8-18.

a. **PRIMAAX EX • FIREMAAX EX** — Ensure the **air spring slot** in the bottom of the air spring engages the **beam notch** on the top of the support beam.

b. **PRIMAAX • FIREMAAX** — Ensure the **V notch** in the end cap engages the air spring **locator tab** on the air spring.

FIGURE 8-17

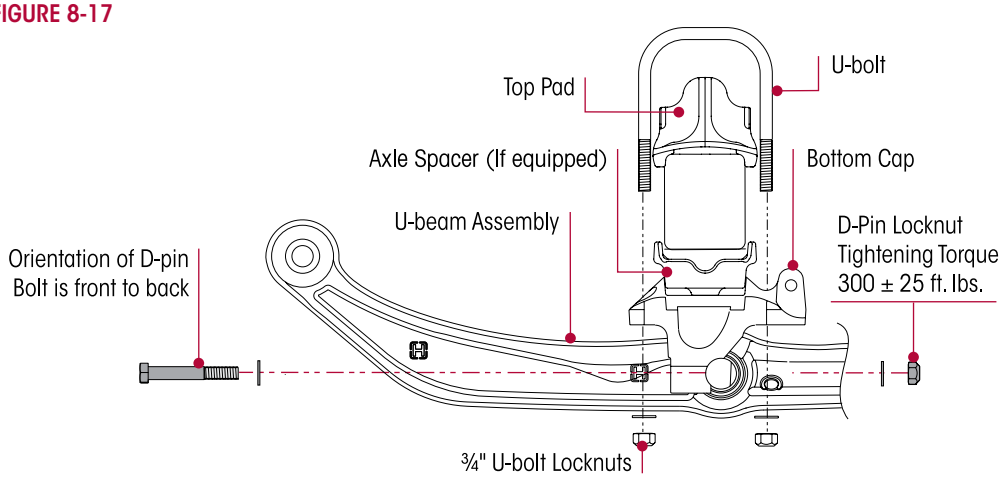

FIGURE 8-18

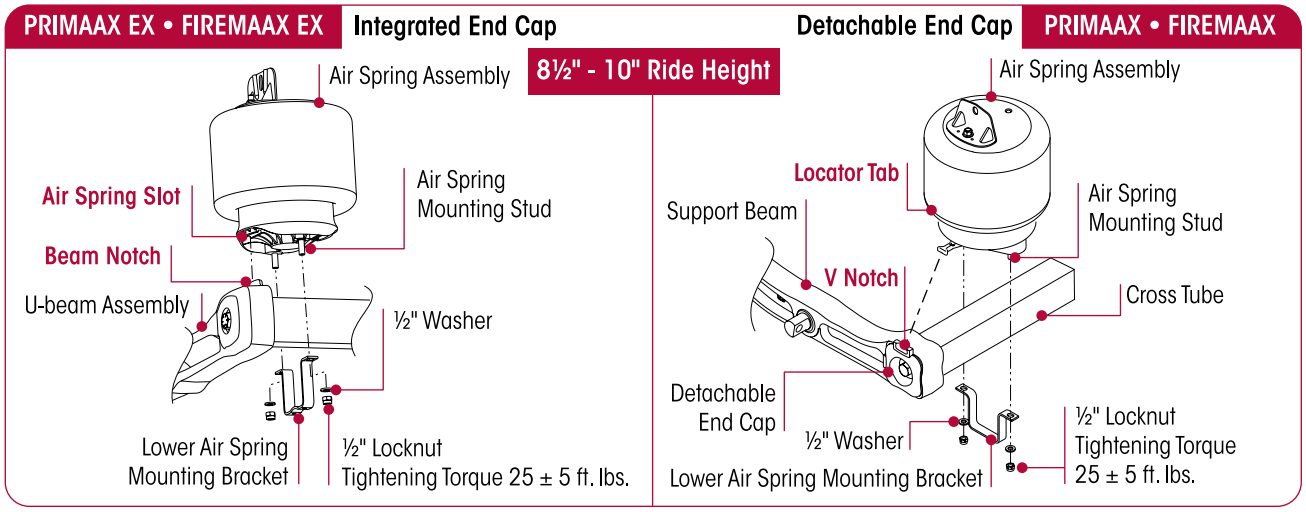

12. Install the lower air spring mounting bracket around the cross tube, engaging the mounting air spring studs, see Figure 8-18.
13. Using **HAND TOOLS** install the lower mounting fasteners and tighten to 25 ± 5 foot pounds torque.
14. Install the wheels and remove axle support.
15. See additional Air Spring Cautions and Warnings in the Important Safety Notice Section of this publication prior to deflating or inflating the air system.
16. Connect the linkage to the height control valve arm(s) to inflate the suspension, see vehicle manufacturer's instructions.
17. Remove frame support(s).
18. Remove the wheel chocks.

NOTE Alignment and QUIK-ALIGN final torque is necessary anytime the U-beam assembly is removed.

19. Check the alignment and adjust if necessary. See Alignment & Adjustments Section of this publication.

20. Once the correct axle alignment is achieved, use a calibrated torque wrench to tighten the 1" QUIK-ALIGN locknuts to 500 ± 25 foot pounds torque.

D-PIN BUSHING

- **Method A –** Using a Shop Press, *see the following procedure*
- **Method B –** Using Tool Nos. 66086-204 • 66086-202, *see the procedure on Page 81*

METHOD A – Using a shop press

You will need:

- A vertical shop press with a capacity of at least 10 tons
- Shop made D-Pin Removal, Installation, and Receiving Tools, see Special Tools Section of this publication

DISASSEMBLY

1. Remove the U-beam assembly. Follow U-beam Assembly removal procedure in this section.

NOTE

On PRIMAAX EX • FIREMAAX EX models built after 9/2010 or equipped with the enhanced U-beam Assembly, it will be necessary to remove the existing sealant and tamper resistant cap for the support beam/cross tube connection to proceed with the bolt removal. Carefully remove sealant with a hand scraper as to not damage the U-beam assembly.

2. Remove the support beam/cross tube connection bolt from the end of the beam.
3. Remove the end cap (if equipped).

⚠ WARNING

WHEN SEPARATING THE U-BEAM ASSEMBLY, PROTECT THE CROSS TUBE BY PLACING A PIECE OF PLYWOOD OR CARDBOARD AROUND THE CROSS TUBE. CAREFULLY DISLODGE THE CROSS TUBE FROM THE SUPPORT BEAM WITH A LONG HANDLED SLEDGE HAMMER BY APPLYING BLUNT FORCE ON THE SUPPORT BEAM DIRECTLY IN FRONT OF THE INBOARD TOP CORNER JOINT. ALL BLUNT FORCE MUST BE APPLIED FLUSH TO THE THICKEST PART OF THE SUPPORT BEAM. FAILURE TO STRIKE THE SUPPORT BEAM SQUARELY MAY RESULT IN COMPONENT DAMAGE, PREMATURE FAILURE AND VOID WARRANTY, SEE FIGURE 8-19.

4. Place a piece of plywood or cardboard around the cross tube prior to applying blunt force to the support beam.

FIGURE 8-19

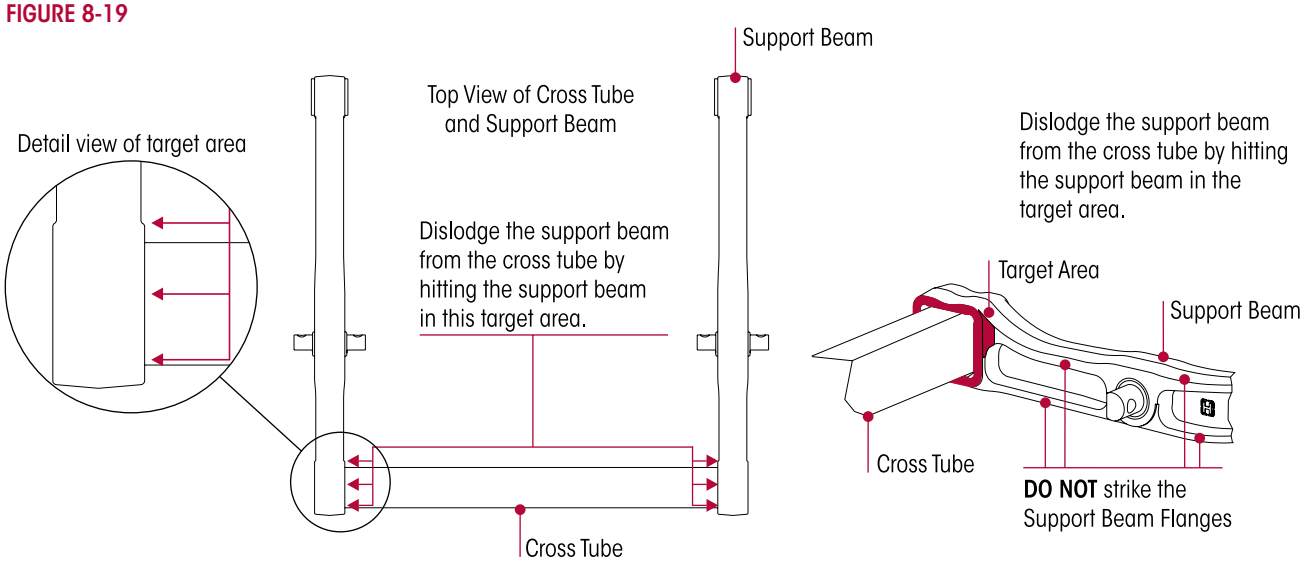

5. Dislodge the support beam from the cross tube by hitting the support beam directly in front of the inboard corner joint. The support beam and cross tube joint requires shock load on the support beam, at the joint, to dislodge the two components. All blunt force must be applied flush to the thickest part of the support beam at the inboard corner joint, see Figure 8-19. Continue striking the support beam until it is completely dislodged from the cross tube.
6. Inspect all components for any damage or wear and replace as necessary.
7. Clean any loose debris or foreign material, and if applied remove all old sealant for inspection and reassembly.
8. Place the support beam in a shop press on top of a receiving tool with both ends of the support beam squarely supported on the press bed.
9. Mark the clocking position of the D-pin bushing on the support beam with a paint stick, see Figure 8-20.
10. Install the D-Pin Removal Tool centered on the D-Pin bushing, see Figure 8-21.

FIGURE 8-20

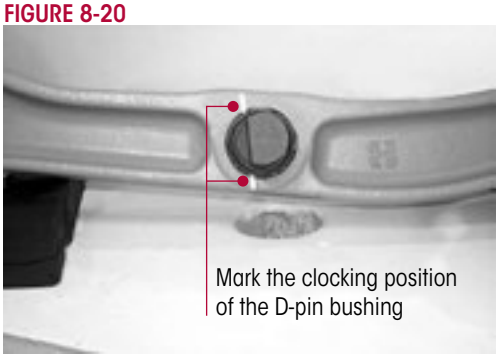

FIGURE 8-21

11. Push directly on the D-pin Removal Tool until the D-Pin bushing is pressed out of the support beam bore.
12. Clean the support beam bore with a wire wheel. Inspect the inner diameter of the D-Pin bore on the support beam, check for any damage to the support beam bore, replace as necessary.

ASSEMBLY

1. Place the support beam in a shop press on the receiving tool with the beveled edge of the D-Pin bore facing up. Both ends of the support beam must be supported squarely on the press bed.
2. Lubricate the support beam D-Pin bore and the D-Pin bushing retaining sleeve with chassis grease, see Figure 8-22.
3. Line up the D-Pin bushing with the clocking line that was put on the support beam prior to the removal of the D-Pin bushing, see Figure 8-23.

FIGURE 8-22

FIGURE 8-23

FIGURE 8-24

FIGURE 8-25

4. Install the D-Pin bushing installation tool and press in the new D-Pin bushing until the outer metal sleeve is centered in the support beam assembly, see Figures 8-24 and 8-25.

NOTE If the service also requires the replacement of the QUIK-ALIGN pivot bushing, refer to QUIK-ALIGN Pivot Bushing Disassembly in this section.

5. Install the support beams into the frame hangers one side at a time. Care should be taken to ensure the support beams are installed in the proper locations, for example: the left rear support beam is installed in the left rear frame hanger.

NOTE All the old sealant **MUST** be removed carefully with a hand scraper as to not damage the U-beam assembly and the sealant application areas should be cleaned.

WARNING DISCARD USED QUIK-ALIGN FASTENERS. ALWAYS USE NEW QUIK-ALIGN FASTENERS TO COMPLETE A REPAIR. FAILURE TO DO SO COULD RESULT IN FAILURE OF THE PART, OR MATING COMPONENTS, ADVERSE VEHICLE HANDLING, PERSONAL INJURY, OR PROPERTY DAMAGE.

WARNING DO NOT ASSEMBLE QUIK-ALIGN JOINT WITHOUT THE PROPER FASTENERS. USE ONLY H-COATED FASTENERS TO SUSTAIN PROPER CLAMP FORCE. FAILURE TO DO SO CAN CAUSE ADVERSE VEHICLE HANDLING, PROPERTY DAMAGE OR PERSONAL INJURY AND VOID WARRANTY. ENSURE THAT THE QUIK-ALIGN FASTENER'S TORQUE VALUES ARE SUSTAINED AS RECOMMENDED IN THE TORQUE SPECIFICATIONS SECTION OF THIS PUBLICATION. FAILURE TO DO SO CAN CAUSE ADVERSE VEHICLE HANDLING RESULTING IN PERSONAL INJURY OR PROPERTY DAMAGE. FOLLOW VEHICLE MANUFACTURER'S FASTENER ORIENTATION WHEN PERFORMING ANY MAINTENANCE, SERVICE OR REPAIR.

NOTE Use a new QUIK-ALIGN pivot bolt kit (see the Parts List Section of this publication) for any axle alignment or disassembly of the QUIK-ALIGN connection. This will help ensure that the proper clamp load is applied to the connection and help prevent the joint to slip in service.

SERVICE HINT Each frame hanger will have a pair of QUIK-ALIGN collars. Note which type of QUIK-ALIGN collar is removed from which frame hanger location to facilitate the assemble process. Any eccentric (with the square drive feature) QUIK-ALIGN collar should be mounted on the outboard side of the frame hanger. Axle thrust angles can only be corrected on frame hangers equipped with eccentric QUIK-ALIGN collars.

6. Verify the correct QUIK-ALIGN collar (eccentric/concentric) is in the correct location as noted in the disassembly procedure.
7. Install QUIK-ALIGN connection with new Hendrickson fasteners and snug to about 50-100 foot pounds torque, **DO NOT** tighten at this time. The final torque is to be done after the alignment is complete.
8. Spread the support beams to facilitate the installation of the cross tube.
9. Install the cross tube into the support beam one side at a time.
10. If equipped, install the end cap making sure the **V notch** in the end cap is on the top.
11. Apply Loctite 277 to the ⅞" fastener and install in end hub. **DO NOT** tighten at this time, see Figure 8-26.

FIGURE 8-26

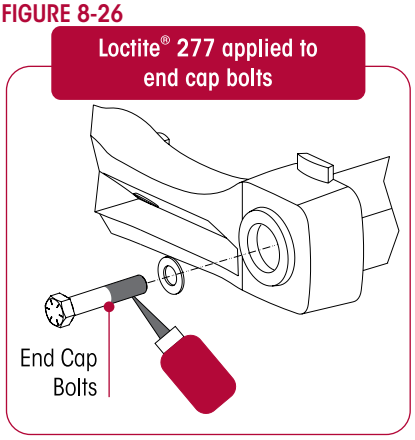

WARNING THE WEIGHT OF THE U-BEAM ASSEMBLY IS APPROXIMATELY 225 POUNDS. CARE SHOULD BE TAKEN AT REMOVAL AND INSTALLATION TO PREVENT PERSONAL INJURY OR DAMAGE TO COMPONENTS.

12. Position the U-beam assembly on a floor jack equipped with a 4" contact plate.

SERVICE HINT It may be necessary to rotate the QUIK-ALIGN eccentric collars to pull the axle forward to allow the full engagement of the D-Pins into the bottom caps.

13. Raise the U-beam assembly until the D-Pins engage in the bottom cap.

SERVICE HINT It may be necessary to raise or lower the front of the differential to allow the D-Pins to engage in the bottom cap. Use a drift pin if necessary to align the D-Pins with the bottom cap.

14. Install the D-Pin fasteners, installing them from front to back, see Figure 8-27.

FIGURE 8-27

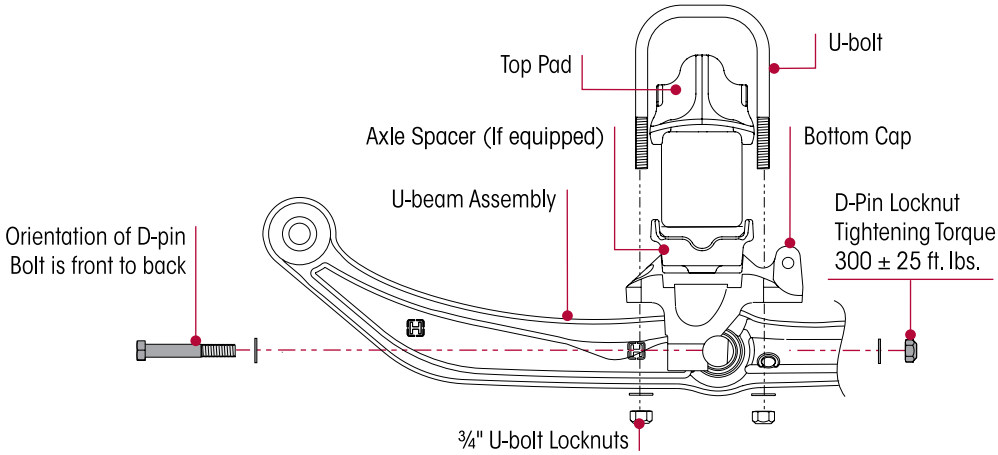

15. Tighten the ⅞" cross tube retaining bolt head to 550 ± 25 foot pounds torque.
16. Tighten D-Pin fasteners to 300 ± 25 foot pounds torque and remove the cross tube support.
17. Carefully clean the application area using a wire brush to remove loose paint and debris.
18. De-grease area with suitable de-greaser such as mineral spirits or brake cleaner. Ensure the area is dry when done.
19. Install tamper resistant cap over fully tightened end cap bolt.

NOTE Apply Sikaflex 221 sealant at room temperature, refer to sealant manufacturer's specifications.

20. Use gloves when applying Sikaflex 221 sealant; apply sealant 360 degrees **over tamper resistant cap** edges and **around cross tube/support beam connection**, ensure there are no voids or gaps in sealant after application, see Figures 8-28.

FIGURE 8-28

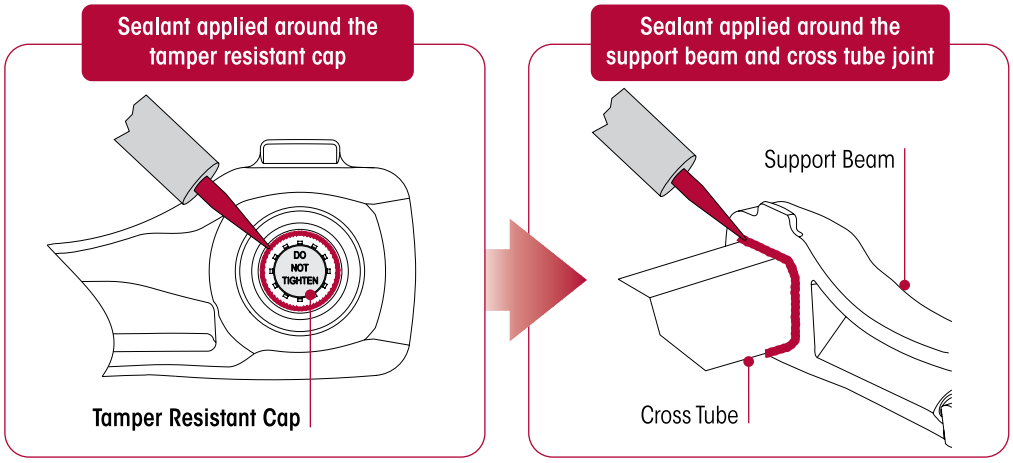

WARNING

IRRITANT, SENSITIZER. SIKAFLEX 221 CAUSES EYE IRRITATION. MAY CAUSE SKIN/RESPIRATORY IRRITATION. MAY CAUSE SKIN AND/OR RESPIRATORY SENSITIZATION AFTER PROLONGED CONTACT. MAY BE HARMFUL IF SWALLOWED. AVOID DIRECT CONTACT. WEAR PERSONAL PROTECTIVE EQUIPMENT (CHEMICAL RESISTANT GOGGLES/GLOVES/CLOTHING) TO PREVENT DIRECT CONTACT WITH SKIN AND EYES. USE ONLY IN WELL VENTILATED AREAS. OPEN DOORS AND WINDOWS DURING USE. USE A PROPERLY FITTED NIOSH RESPIRATOR IF VENTILATION IS POOR. WASH THOROUGHLY WITH SOAP AND WATER AFTER USE. REMOVE CONTAMINATED CLOTHING AND LAUNDER BEFORE REUSE. STRICTLY FOLLOW ALL USAGE, HANDLING AND STORAGE INSTRUCTIONS AS PROVIDED BY THE MANUFACTURER.

NOTE **DO NOT** allow the sealant to interfere with air spring mounting.

21. Install the air spring between the frame and the cross tube, see Figure 8-29.
    a. **PRIMAAX EX • FIREMAAX EX** — Ensure the **air spring slot** in the bottom of the air spring engages the **beam notch** on the top of the support beam.
    b. **PRIMAAX • FIREMAAX** — Ensure the **V notch** in the end cap engages the air spring **locator tab** on the air spring.
22. Install the lower air spring mounting bracket around the cross tube, engaging the mounting air spring studs, see Figure 8-29.
23. Using **HAND TOOLS** only, install the lower mounting fasteners and tighten to 25 ± 5 foot pounds torque, see Figure 8-29.

FIGURE 8-29

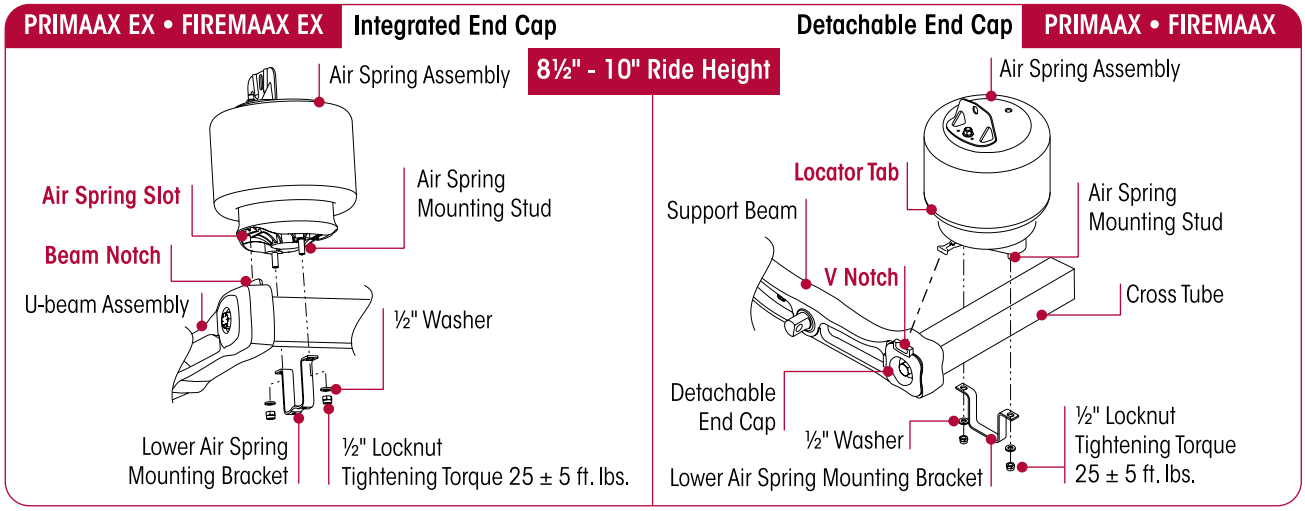

WARNING

PRIOR TO AND DURING DEFLATION AND INFLATION OF THE AIR SUSPENSION SYSTEM, ENSURE THAT ALL PERSONNEL AND EQUIPMENT ARE CLEAR FROM UNDER THE VEHICLE AND AROUND THE SERVICE AREA, FAILURE TO DO SO CAN CAUSE SERIOUS PERSONAL INJURY, DEATH, OR PROPERTY DAMAGE.

24. Install the wheels and remove the axle support(s).
25. See additional Air Spring Cautions and Warnings in the Important Safety Notice Section of this publication prior to deflating or inflating the air system.
26. Connect the height control valve linkage assembly to the height control valve arm(s) to inflate the suspension. Remove the frame support.
27. Remove the wheel chocks.
28. Verify the ride height is correct. See ride section

NOTE Alignment and QUIK-ALIGN final torque is necessary anytime the support beam is removed.

29. Check the alignment and adjust if necessary. See Alignment & Adjustments Section of this publication.
30. Once the correct axle alignment is achieved, use a calibrated torque wrench to tighten the 1" QUIK-ALIGN locknuts to 500 ± 25 foot pounds torque.

METHOD B – Using Tool Nos. 66086-204 • 66086-202

You will need:

- Hendrickson Tool Part Nos. 66086-204 • 66086-202 (OTC Nos. 4247 • 4246), *refer to the Special Tools Section of this publication*

REMOVAL		✔	✔	✔
INSTALLATION	✔		✔	✔
D-pin 23K • 52K	**575164** Saddle	**575163** Adapter Pin	**576421** D-pin Adapter	**575167** Alignment Tool

DISASSEMBLY

1. Mark the spring to show the alignment of the existing D-pin. Install the alignment tool over the D-pin, and place the clamping plate over the alignment tool,see Figure 8-30.
2. Assemble the clamping nuts to the threaded rods.
3. Insert a threaded rod through the upper holes in the clamping plate and the head plate. Install a hex nut on the threaded rod, but **DO NOT** tighten at this time.
4. Insert a threaded rod through the lower holes in the clamping plate and the head plate. Install a hex nut on the threaded rod, but **DO NOT** tighten at this time.
5. Tighten the clamping nuts to the clamping plate, see Figure 8-31.
6. Remove the alignment tool.

⚠ WARNING

TO PREVENT PERSONAL INJURY, THE CYLINDER MUST BE FULLY THREADED INTO THE CYLINDER MOUNTING PLATE.

7. Thread the cylinder into the cylinder mounting plate, see Figure 8-32.

FIGURE 8-30

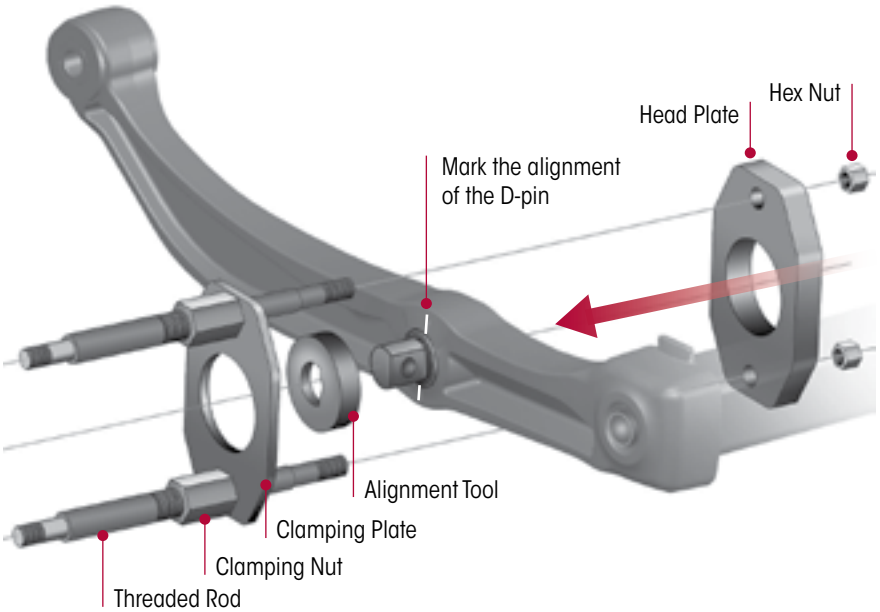

FIGURE 8-31

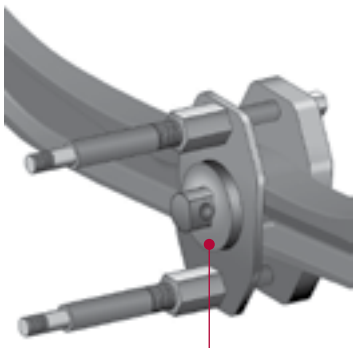

8. Install the cylinder mounting plate onto the end of the threaded rods. Adjust the clamping nuts as needed to fit the threaded rods through the holes in the cylinder mounting plate. Assemble the hex nuts on the threaded rods. Tighten the hex nuts on both ends of the threaded rods.

FIGURE 8-32

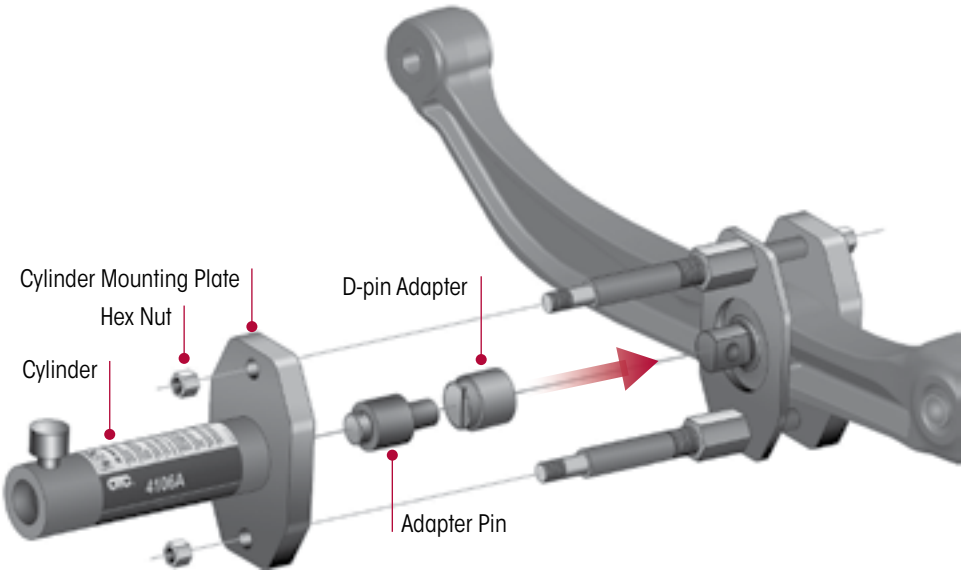

9. Place the D-pin adapter over the D-pin.
10. Insert the adapter pin into the head of the cylinder.
11. Prepare the hydraulic pump for use by following the instructions provided with the pump regarding hookup, venting, priming, and operation.

WARNING TO PREVENT PERSONAL INJURY, PUMP CAPACITY MUST NOT EXCEED 10,000 PSI.

12. Connect the hydraulic hose from the hydraulic pump to the cylinder.
13. Operate the pump to extend the cylinder piston and apply pressure to push the D-pin out of the spring.

WARNING TO PREVENT PERSONAL INJURY FROM POSSIBLE BREAKAGE UNDER PRESSURE, DO NOT STAND IN THE VICINITY OF THE TOOL WHILE THE D-PIN IS BEING EXTRACTED. IT IS ESPECIALLY IMPORTANT TO NOT STAND IN THE DIRECTION OF THE HYDRAULIC FORCE.

ASSEMBLY

1. Clean and thoroughly lubricate the entire surface of the inside diameter of the spring, see Figure 8-33.
2. Insert the saddle into the head of the cylinder.
3. Assemble the new D-pin and the D-pin adapter as shown. Align the line in the D-pin adapter with the alignment marks made during the removal procedure.
4. Operate the pump to extend the cylinder piston and apply enough pressure to hold the tool and components. Check the alignment of the D-pin. The centerline of the D-pin must be aligned with the centerline of the inside diameter of the spring.

WARNING TO PREVENT PERSONAL INJURY, PUMP CAPACITY MUST NOT EXCEED 10,000 PSI.

5. Operate the pump to apply pressure to install the D-pin completely into the spring.

WARNING TO PREVENT PERSONAL INJURY FROM POSSIBLE BREAKAGE UNDER PRESSURE, DO NOT STAND IN THE VICINITY OF THE TOOL WHILE THE D-PIN IS BEING INSTALLED. IT IS ESPECIALLY IMPORTANT TO NOT STAND IN THE DIRECTION OF THE HYDRAULIC FORCE.

FIGURE 8-33

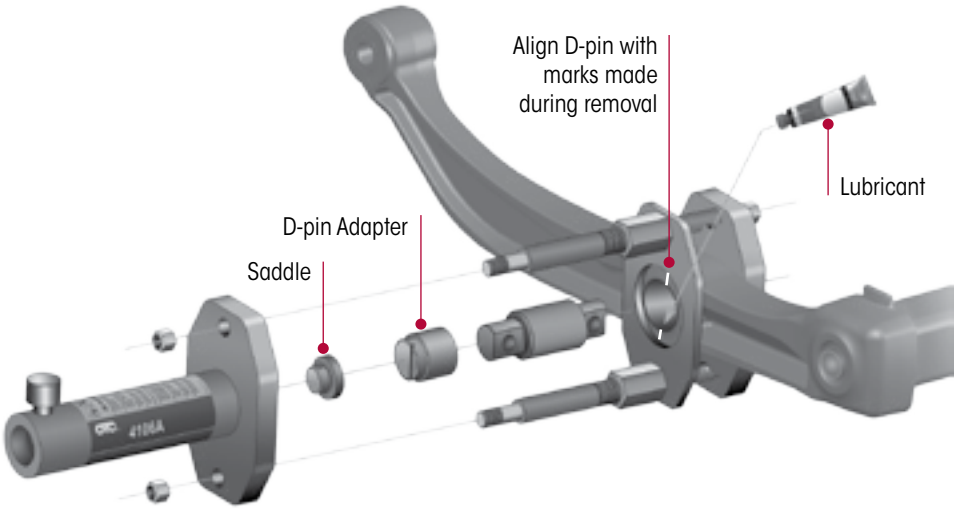

QUIK-ALIGN PIVOT BUSHING

- **Method A –** Using a Shop Press, *see the following procedure*
- **Method B –** Using Tool Nos. 66086-204 • 66086-202
- **Method C –** Using Tool No. 66086-203L, *see the procedure in this section or refer to Hendrickson Literature No. 59310-061*

METHOD A – Using a shop press

You will need:

- A vertical shop press with a capacity of at least 10 tons
- Shop made QUIK-ALIGN pivot bushing installer, remover and receiver tools, see the Special Tools Section of this publication

DISASSEMBLY

NOTE To replace the pivot bushing it will be necessary to remove the U-beam assembly and then separate the support beam assembly from the cross tube.

1. Remove the U-beam assembly from the vehicle per the U-beam Disassembly procedure in this Section.
2. Center the pivot bushing remover tool on the inner sleeve and press out the old bushing, (these bushings are not cartridge type bushings, they **DO NOT** have outer metals), see Figures 8-34 and 8-35.
3. Clean and inspect the inner diameter of the support beam eye.

FIGURE 8-34

FIGURE 8-35

ASSEMBLY

NOTE **DO NOT** use petroleum or soap base lubricant, it can cause an adverse reaction with the bushing material, such as deterioration.

1. Lubricate the bushing and the inner diameter of the support beam eye with light Naphthenic Base Oil, such as 60 SUS at 100°F, see Figure 8-36.
2. Position the support beam on the pivot bushing receiver tool with the support beam eye centered on the receiver tool.
3. Ensure the support beam is squarely supported on the press bed.
4. Place the pivot bushing installer tool centered on the pivot bushing, see Figure 8-37.
5. Press in the new pivot bushing. Ensure the pivot bushing is centered within the support beam eye. When pressing in the new bushings over-shoot desired final position by 3⁄16" and press again from the opposite side to center the bushing within the support beam eye bore, if necessary, see Figure 8-38.
6. Install the U-beam assembly per the U-beam Assembly procedure in this Section.

FIGURE 8-36

FIGURE 8-37

FIGURE 8-38

METHOD B – Using Tool Nos. 66086-204 • 66086-202

You will need:

- Hendrickson Tool Part Nos. 66086-204 • 66086-202 (OTC Nos. 4247 • 4246), refer to the Special Tools Section of this publication

REMOVAL	✔	✔	✔	✔
INSTALLATION	✔		✔	✔
	575163 Adapter Pin	**576421** D-pin Adapter	**575165** Bushing Support	**575167** Alignment Tool

DISASSEMBLY

1. Insert the adapter pin through the alignment tool and into the pivot bushing hole as shown in Figure 8-39.
2. Insert the bushing support over the pivot bushing.
3. Assemble the clamping nuts to the threaded rods.

4. Insert a threaded rod through the upper holes in the clamping plate and the head plate while positioning the head plate over the bushing support. Install a hex nut on the threaded rod, but **DO NOT** tighten at this time.
5. Insert a threaded rod through the lower holes in the clamping plate and the head plate. Install a hex nut on the threaded rod, but **DO NOT** tighten at this time.
6. Tighten the clamping nuts to the clamping plate, see Figure 8-40.
7. Remove the alignment tool and adapter pin.
8. Thread the cylinder into the cylinder mounting plate, see Figure 8-41.

WARNING

TO PREVENT PERSONAL INJURY, THE CYLINDER MUST BE FULLY THREADED INTO THE CYLINDER MOUNTING PLATE.

FIGURE 8-39

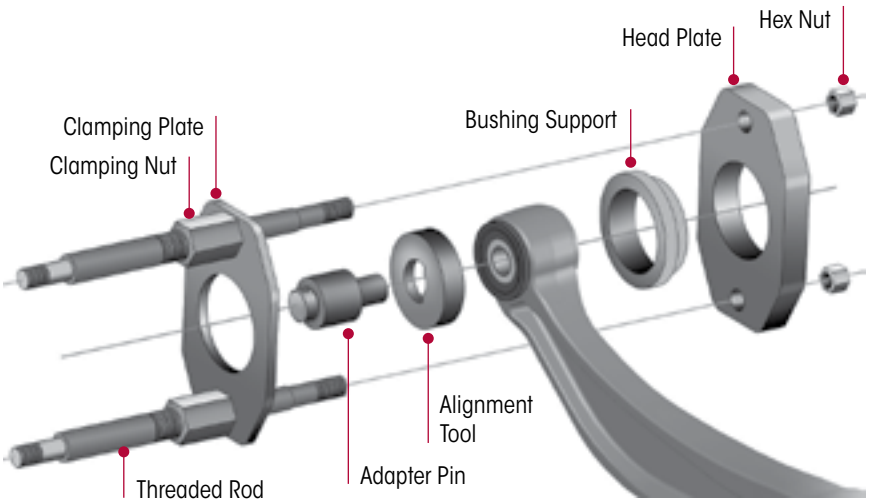

FIGURE 8-40

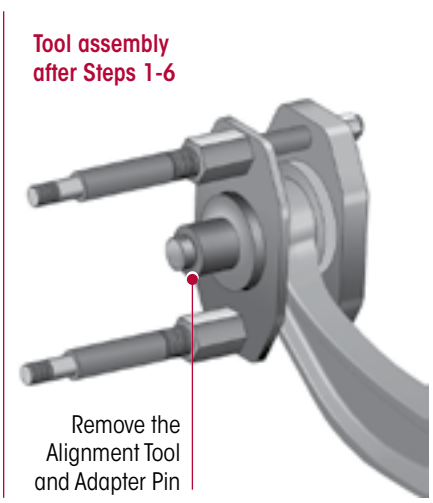

FIGURE 8-41

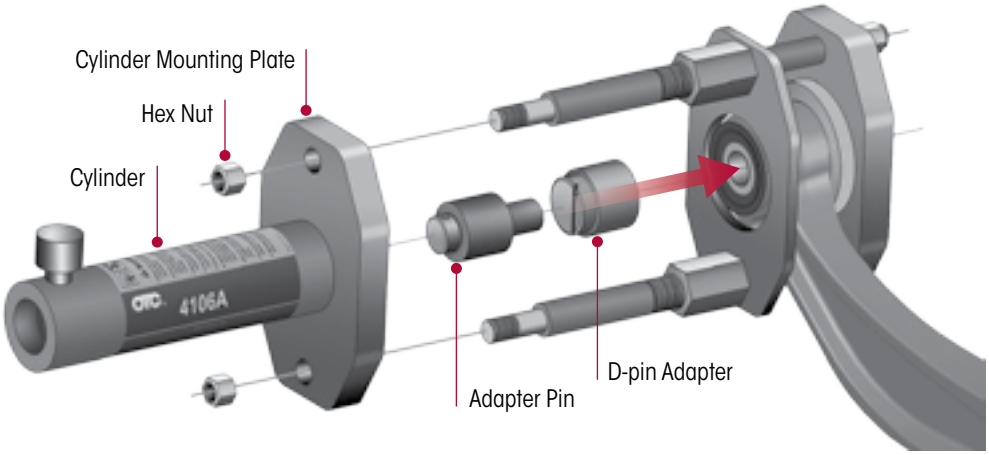

9. Install the cylinder mounting plate onto the end of the threaded rods. Adjust the clamping nuts as needed to fit the threaded rods through the holes in the cylinder mounting plate. Assemble the hex nuts on the threaded rods. Tighten the hex nuts on both ends of the threaded rods.
10. Hold the D-pin adapter over the pivot bushing until contact is made with the adapter pin.
11. Insert the adapter pin into the head of the cylinder.

WARNING

TO PREVENT PERSONAL INJURY, PUMP CAPACITY MUST NOT EXCEED 10,000 PSI.

12. Prepare the hydraulic pump for use by following the instructions provided with the pump regarding hookup, venting, priming, and operation.

WARNING

TO PREVENT PERSONAL INJURY FROM POSSIBLE BREAKAGE UNDER PRESSURE, DO NOT STAND IN THE VICINITY OF THE TOOL WHILE THE PIVOT BUSHING IS BEING EXTRACTED. IT IS ESPECIALLY IMPORTANT TO NOT STAND IN THE DIRECTION OF THE HYDRAULIC FORCE.

13. Connect the hydraulic hose from the hydraulic pump to the cylinder.
14. Operate the pump to extend the cylinder piston and apply pressure to push the pivot bushing out of the spring.

ASSEMBLY

1. Clean and thoroughly lubricate the entire surface of the inside diameter of the spring, see Figure 8-42.

FIGURE 8-42

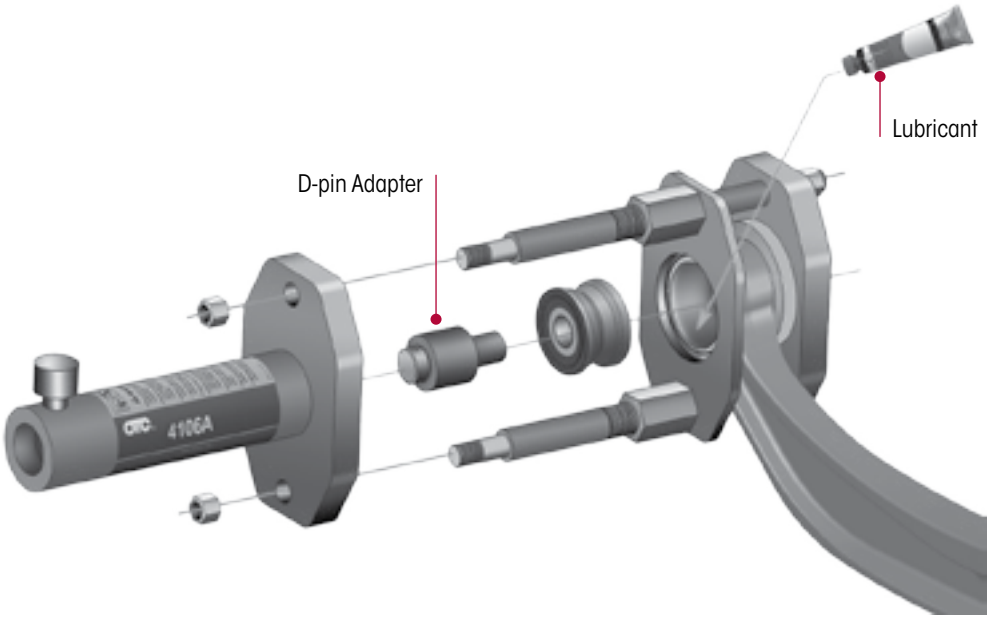

2. Insert the adapter pin into the head of the cylinder.
3. Place the pivot bushing on the end of the adapter pin as shown.
4. Operate the pump to extend the cylinder piston and apply enough pressure to hold the tool and components. Check the alignment of the pivot bushing.

WARNING

TO PREVENT PERSONAL INJURY, PUMP CAPACITY MUST NOT EXCEED 10,000 PSI.

5. Operate the pump to apply pressure to install the pivot bushing completely into the spring.

WARNING

TO PREVENT PERSONAL INJURY FROM POSSIBLE BREAKAGE UNDER PRESSURE, DO NOT STAND IN THE VICINITY OF THE TOOL WHILE THE PIVOT BUSHING IS BEING INSTALLED. IT IS ESPECIALLY IMPORTANT TO NOT STAND IN THE DIRECTION OF THE HYDRAULIC FORCE.

METHOD C – Using Tool No. 66086-203L

SERVICE HINT

Use QUIK-ALIGN **Pivot Bushing Tool No. 66086-203L** to help with the installation / removal of the QUIK-ALIGN pivot bushing for PRIMAAX EX • PRIMAAX suspensions. The tool allows the old bushing to be pushed out from the U-beam assembly into the receiving cylinder at the same time as installing the new bushing into the U-beam assembly.

WARNING

A TECHNICIAN USING A SERVICE PROCEDURE OR TOOL WHICH HAS NOT BEEN RECOMMENDED BY HENDRICKSON MUST FIRST SATISFY HIMSELF THAT NEITHER HIS SAFETY NOR THE VEHICLE'S SAFETY WILL BE JEOPARDIZED BY THE METHOD OR TOOL SELECTED. INDIVIDUALS DEVIATING IN ANY MANNER FROM THE INSTRUCTIONS PROVIDED WILL ASSUME ALL RISKS OF CONSEQUENTIAL PERSONAL INJURY OR DAMAGE TO EQUIPMENT INVOLVED.

NOTE When replacing a pivot bushing it is recommended to replace both pivot bushings on the U-beam assembly.

To replace the QUIK-ALIGN pivot bushing you will need:

- A QUIK-ALIGN pivot bushing service tool (Part No. 66086-203L), see Figure 8-43
- ¾" Impact wrench (impact gun), some ½" impact wrenches may work

FIGURE 8-43

NOTE

Apply NLGI #2–EP chassis lubricant to each face of the thrust washers and to the drive screw that will engage through the receiving cylinder.

Apply P80 lubricant to the face of the lead-in flange and the outer diameter of **NEW** pivot bushing

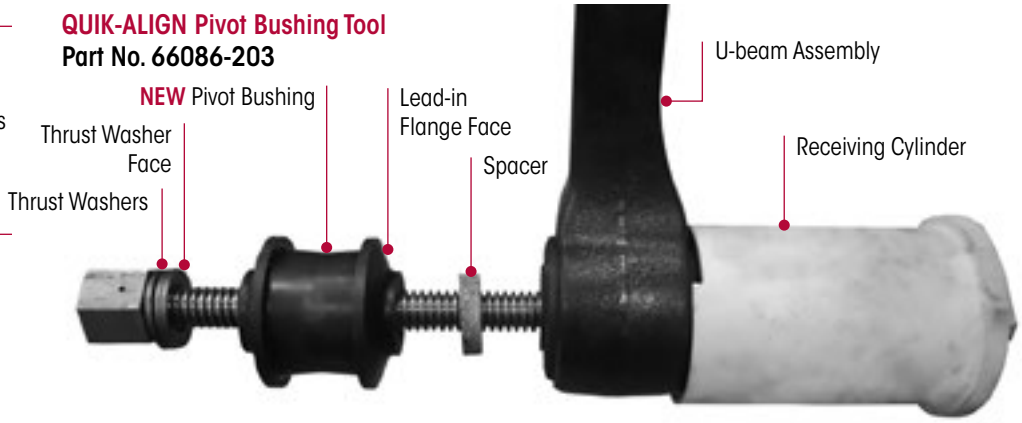

DISASSEMBLY

1. Remove the U-beam assembly from the vehicle per the U-beam Disassembly procedure in this Section.
2. After removal, place U-beam assembly on the floor or suitable work area.

ASSEMBLY

NOTE The 66086-203L tool can be used to remove the old bushing first then install the new bushing, if bore inspection is needed.

1. Install the pivot bushing tool and the new pivot bushing as shown in Figure 8-43.
2. Remove any loose rubber or debris from the old bushing.
3. Apply NLGI #2–EP (Extreme Pressure) chassis lubricant to each face of the thrust washers and to the drive screw that will engage through the receiving cylinder.
4. Snug the threaded drive screw to hold the thrust washers, NEW pivot bushing, spacer, U-beam assembly with the old pivot bushing and the receiving cylinder in place, see Figure 8-44.

NOTE **DO NOT** use petroleum or soap base lubricant, it can cause an adverse reaction with the bushing material, such as deterioration.

5. Apply P-80 lubricant to the face of the lead-in flange and the outer diameter of NEW pivot bushing, see Figure 8-43. P-80 lubricant is supplied in the QUIK-ALIGN Pivot Bushing Kits (Wheel End Kit No. 60961-720 or Axle Set Kit No. 60632-020).

SERVICE HINT To center the pivot bushing within the end hub, it may be necessary to overshoot the desired final position. Then from opposite side, reverse the installation tool and press the pivot bushing again to center the bushing within the beam end hub.

6. Using a ¾" impact wrench, rotate the drive screw in a continuous motion without stopping until the pivot bushing appears centered in the hub. The old bushing will fall into the receiving cylinder, see Figure 8-44.
7. Using the impact wrench rotate the drive screw in the opposite direction to remove tool.
8. Repeat Steps 1 through 6 for other side of the U-beam assembly.
9. Allow the lubricant **four hours** to dissipate before fully operating the vehicle.
10. Install the U-beam assembly per the U-beam Assembly procedure in this Section.

FIGURE 8-44

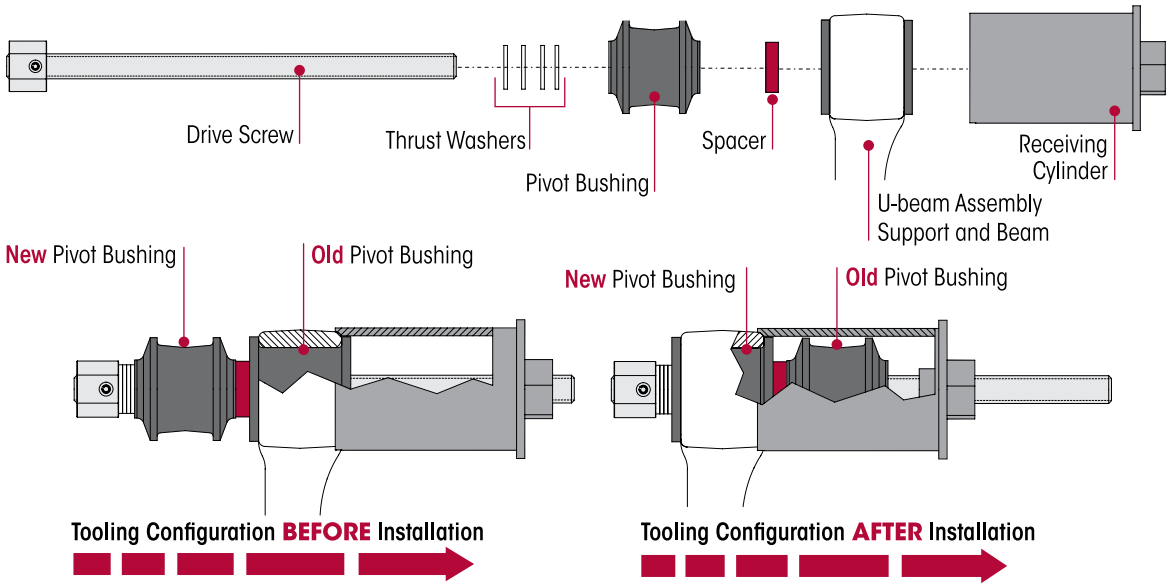

TOP PAD

DISASSEMBLY

1. Chock the front wheels.
2. Support the frame at ride height.
3. Disconnect the height control valve linkage assembly from the height control valve arm(s) by sliding the rubber grommet off the stud on the height control valve arm.

WARNING

PRIOR TO AND DURING DEFLATION AND INFLATION OF THE AIR SUSPENSION SYSTEM, ENSURE THAT ALL PERSONNEL AND EQUIPMENT ARE CLEAR FROM UNDER THE VEHICLE AND AROUND THE SERVICE AREA, FAILURE TO DO SO CAN CAUSE SERIOUS PERSONAL INJURY, DEATH, OR PROPERTY DAMAGE.

4. See additional Air Spring Cautions and Warnings in the Important Safety Notice Section of this publication prior to deflating or inflating the air system.

WARNING

SOME VEHICLE APPLICATIONS, SUCH AS VEHICLES EQUIPPED WITH OUTRIGGERS, RETAIN SOME AIR PRESSURE IN THE AIR SPRINGS AT ALL TIMES. PRIOR TO PERFORMING ANY MAINTENANCE, SERVICE, OR REPAIR OF THE SUSPENSION, VERIFY EACH AIR SPRING IS COMPLETELY DEFLATED. FAILURE TO DO SO COULD RESULT SERIOUS PROPERTY DAMAGE AND/OR SEVERE PERSONAL INJURY.

5. Lower the height control valve arm(s) to exhaust the air in the air springs and deflate the rear suspension.

SERVICE HINT

Note the quantity of shims removed to maintain the correct pinion angle of the axle at assembly. Refer to the Alignment & Adjustments Section of this publication.

6. Remove and discard the fasteners from the longitudinal torque rod to top pad joint. Remove the shims (if equipped), see Figure 8-45.

NOTE

Due to certain pinion angle configurations, the removal of the D-Pin bolts may be necessary to access the U-bolt locknuts.

7. Support the U-beam assembly with a floor jack that is equipped with a 4" contact plate.
8. Remove and discard the U-bolt fasteners from the clamp group.
9. Remove the top pad.
10. Inspect the top pad and the axle housing for any cracks or damage. Replace if necessary.

FIGURE 8-45

PRIMAAX EX 23K•46K•69K | FIREMAAX EX 24K•48K Shown

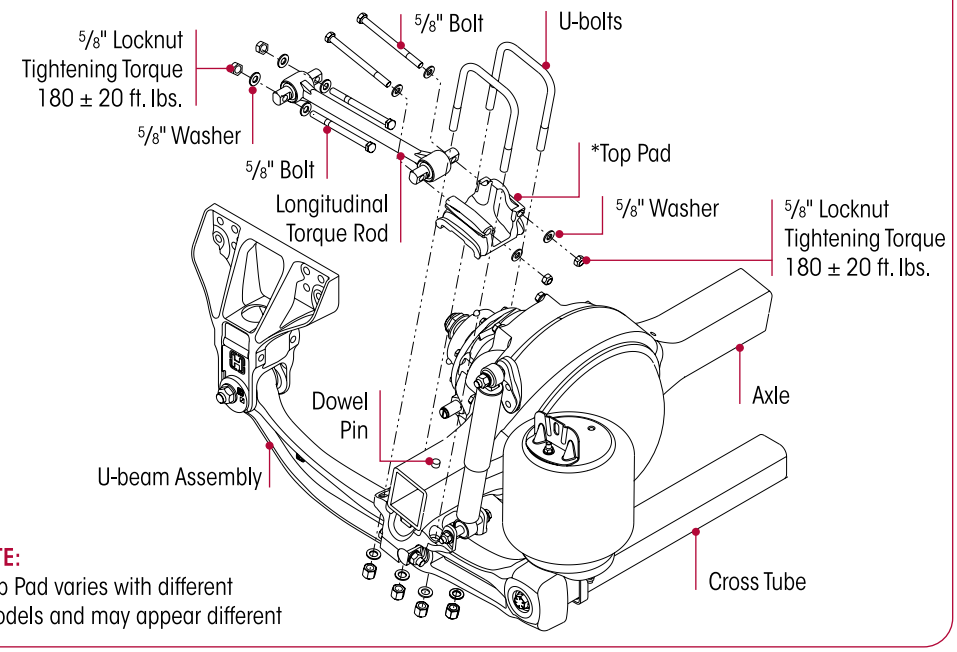

NOTE:
* Top Pad varies with different models and may appear different

ASSEMBLY

SERVICE NOTE

The following models: PRIMAAX EX 26K•52K•78K, FIREMAAX EX 27K•54K, PRIMAAX 260•520•780, FIREMAAX 270•540 may be equipped with top pads, axle spacers, and bottom caps that are contoured to fit the axle housing on the axle's short arm side. Ensure the correct parts are installed at each location, refer to the Bottom Cap Selection Guides in the Parts List Section of this publication.

1. Install the top pad on the top of the axle engaging the dowel pin. Care should be taken to ensure the taller ear of the top pad is mounted to the inboard side of the suspension. The top pad varies with different models and may appear different, see Figure 8-46.

FIGURE 8-46

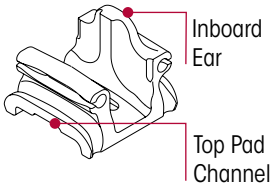

PRIMAAX EX
23K•46K•69K|23K T•46K T•69K T
26K S•52K S•78K S
26K ST•52K ST•78K ST
FIREMAAX EX
24K•48K|24K T•48K T
27K S•54K S|27K ST•54K ST

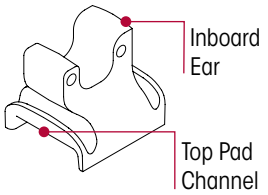

PRIMAAX EX
26K•52K•78K|26K T•52K T•78K T
FIREMAAX EX
27K•31K•54K•62K
27K T•31K T•54K T•62K T
PRIMAAX 260•520•780
FIREMAAX 270•540

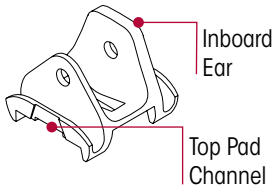

PRIMAAX
230•460•690|230T•460T•690T
FIREMAAX
240•480|240T•480T

2. Install the new U-bolts, washers, and locknuts.

NOTE

Current Hendrickson Truck Suspension Systems U-bolt locknuts for the PRIMAAX EX • FIREMAAX EX | PRIMAAX • FIREMAAX suspension are ¾"-16 Grade C and are phosphate and oil coated.

3. Verify that the U-bolts are seated properly in the top pad channels, see Figure 8-45.

FIGURE 8-47

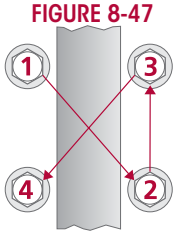

4. Tighten the U-bolt locknuts evenly in 50 foot pound increments in the proper pattern to achieve uniform bolt tension, see Figure 8-47.
5. Rap the top of the U-bolts with a dead blow mallet, and retighten to the proper torque. **DO NOT** exceed specified torque on U-bolt locknuts. Tighten the ¾" locknuts to 375 ± 25 foot pounds torque.
6. Tighten the D-Pin fasteners to 300 ± 25 foot pounds torque if loosened or removed during disassembly, see Figure 8-48.

FIGURE 8-48

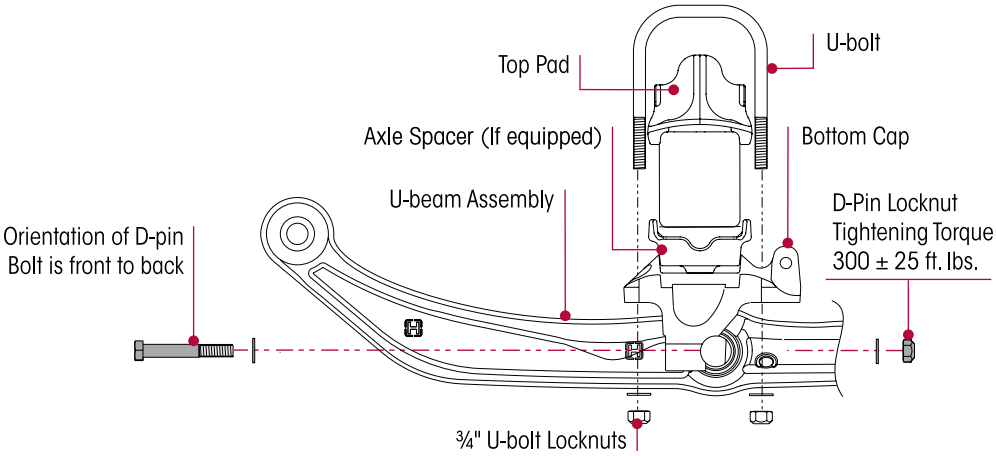

7. Remove the support from the support beam assembly.
8. Install the fasteners on the longitudinal torque rod, **DO NOT** tighten at this time.
9. See additional Air Spring Cautions and Warnings in the Important Safety Notice Section of this publication prior to deflating or inflating the air system.
10. Connect the height control valve linkage rod(s) to the height control valve arm(s) to inflate the suspension.
11. Remove the frame stands.

NOTE It is mandatory to have the vehicle at proper ride height prior to tightening the ⅞" top pad through bolt locknut to torque specifications.

12. Tighten the longitudinal torque rod fasteners to the required specification, see the Torque Specifications Section of this publication.
13. Remove the wheel chocks.

BOTTOM CAP AND AXLE SPACER (if equipped)

NOTE It is not necessary to loosen the QUIK-ALIGN connection to service the bottom cap and axle spacer, therefore alignment is preserved during service. If the QUIK-ALIGN connection is loosened during service, alignment is required after service is completed.

DISASSEMBLY

1. Chock the wheels of the axle.
2. Raise the frame of the vehicle to remove the load from the suspension. Support the frame.
3. Raise and support the axle being serviced. Remove the tires.
4. Disconnect the height control linkage assembly from the height control valve arm by sliding the rubber grommet off the height control valve arm's stud.

WARNING

PRIOR TO AND DURING DEFLATION AND INFLATION OF THE AIR SUSPENSION SYSTEM, ENSURE THAT ALL PERSONNEL AND EQUIPMENT ARE CLEAR FROM UNDER THE VEHICLE AND AROUND THE SERVICE AREA, FAILURE TO DO SO CAN CAUSE SERIOUS PERSONAL INJURY, DEATH, OR PROPERTY DAMAGE.

5. See additional Air Spring Cautions and Warnings in the Important Safety Notice Section of this publication prior to deflating or inflating the air system.

WARNING

SOME VEHICLE APPLICATIONS, SUCH AS VEHICLES EQUIPPED WITH OUTRIGGERS, RETAIN SOME AIR PRESSURE IN THE AIR SPRINGS AT ALL TIMES. PRIOR TO PERFORMING ANY MAINTENANCE, SERVICE, OR REPAIR OF THE SUSPENSION, VERIFY EACH AIR SPRING IS COMPLETELY DEFLATED. FAILURE TO DO SO COULD RESULT SERIOUS PROPERTY DAMAGE AND/OR SEVERE PERSONAL INJURY.

6. Lower the height control valve arm(s) to exhaust the air in the air springs and deflate the rear suspension.
7. Clean and lubricate the lower mounting fasteners of the air springs with penetrating oil. This will help prevent the air spring mounting studs from breaking during the removal process.
8. Remove the lower mounting fasteners from the air springs using **HAND TOOLS** only, see Figure 8-49.

FIGURE 8-49

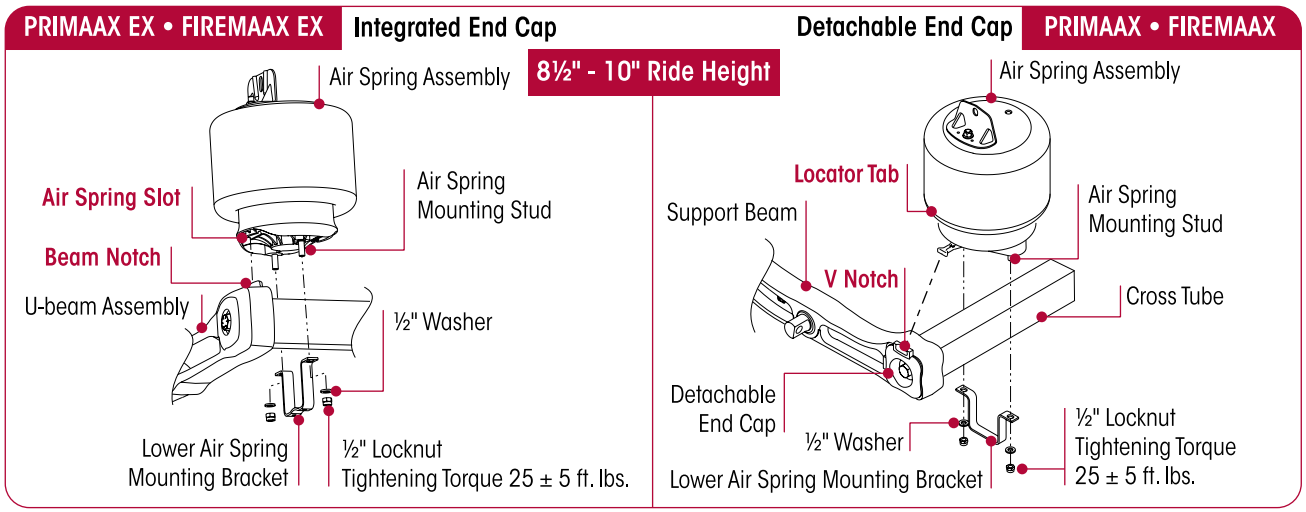

WARNING

IT IS MANDATORY TO USE A FLOOR JACK EQUIPPED WITH A FOUR INCH CONTACT PLATE TO SUPPORT THE U-BEAM ASSEMBLY AT THE CROSS TUBE TO FACILITATE SAFE LOWERING AND RAISING OF THE U-BEAM ASSEMBLY. DO NOT USE A BOTTLE JACK. A BOTTLE JACK DOES NOT HAVE ENOUGH CONTACT AREA AND CAN BE UNSTABLE. FAILURE TO DO SO CAN CAUSE COMPONENT DAMAGE OR RESULT IN PERSONAL INJURY.

9. Support the U-beam assembly at the cross tube with a floor jack that is equipped with a four inch contact plate.

WARNING

THE WEIGHT OF THE U-BEAM ASSEMBLY IS APPROXIMATELY 225 POUNDS. CARE SHOULD BE TAKEN AT REMOVAL AND INSTALLATION TO PREVENT PERSONAL INJURY OR DAMAGE TO COMPONENTS.

10. Remove the D-Pin fasteners from both sides of the support beam.
11. Raise the front of the differential to facilitate removal of the D-Pins from the bottom caps.
12. Lower the floor jack to pivot the U-beam assembly down from the bottom caps.
13. Remove the lower shock absorber mounting fasteners. Pivot the lower shock mount out of the bottom cap.
14. Remove the S-cam support bracket fasteners and support bracket (if equipped), see Figure 8-50.
15. Remove the U-bolt fasteners from the clamp group and discard.

16. Remove the bottom cap and inspect for damage or wear. Replace as necessary.

FIGURE 8-50

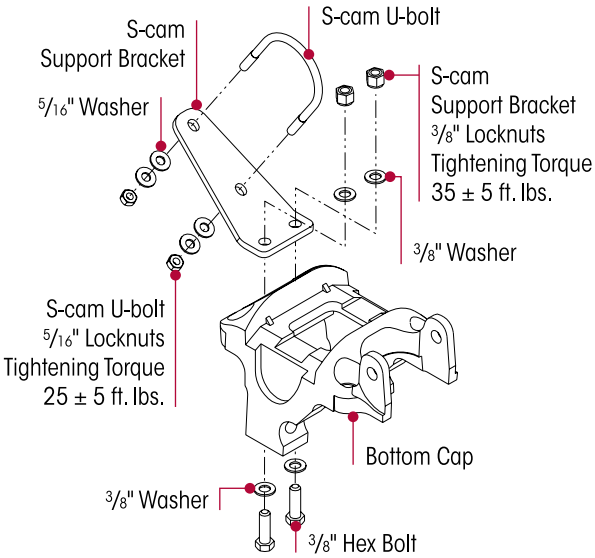

ASSEMBLY

NOTE The following models PRIMAAX EX 26K • 52K • 78K, FIREMAAX EX 27K • 54K, PRIMAAX 260 • 520 • 780, FIREMAAX 270 • 540 may be equipped with top pads, axle spacers, and bottom caps that are contoured to fit the axle housing on the axle's short arm side. Ensure the correct parts are installed at each location, refer to the Bottom Cap Selection Guides in the Parts List Section of this publication.

1. Install the top pad (if removed) on the top of the axle engaging the dowel pin. Care should be taken to ensure the taller ear of the top pad is mounted to the inboard side of the suspension, see Figure 8-51.

FIGURE 8-51

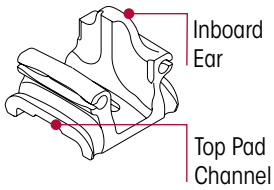

PRIMAAX EX
23K•46K•69K|23KT•46KT•69KT
26K S•52K S•78K S
26K ST•52K ST•78K ST
FIREMAAX EX
24K•48K|24KT•48KT
27K S•54K S|27K ST•54K ST

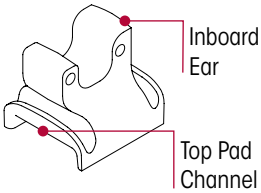

PRIMAAX EX
26K•52K•78K|26KT•52KT•78KT
FIREMAAX EX
27K•31K•54K•62K
27KT•31KT•54KT•62KT
PRIMAAX 260•520•780
FIREMAAX 270•540

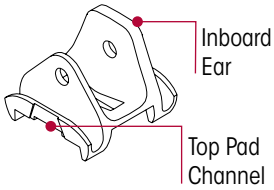

PRIMAAX
230•460•690|230T•460T•690T
FIREMAAX
240•480|240T•480T

2. Install the bottom cap and axle spacer (if equipped) on the axle in the proper direction, with the lower shock mounting holes facing the rear of the vehicle.
3. Install the new U-bolts. Verify that the U-bolts are seated properly in the top pad channels and through the bottom cap.

NOTE Current Hendrickson Truck Suspension Systems U-bolt locknuts for the PRIMAAX EX • FIREMAAX EX | PRIMAAX • FIREMAAX suspension are ¾" -16 Grade C and are phosphate and oil coated.

4. Install the U-bolt ¾" washers and the locknuts.

⚠ CAUTION PRIOR TO TIGHTENING THE U-BOLTS TO THE FINAL TORQUE, ENSURE THE U-BEAM ASSEMBLY AND THE BOTTOM CAP ASSEMBLY ARE CENTERED ON THE AXLE (**A** = **B** ± ⅛"), SEE FIGURE 8-52. FAILURE TO DO SO COULD CAUSE PREMATURE COMPONENT WEAR OR CAUSE UNEVEN LOAD DISTRIBUTION.

5. Center the U-beam assembly, and the bottom cap assembly on the axle (**A** = **B** ± ⅛"), see Figure 8-52.

SERVICE HINT It may be necessary to raise the front of the differential to allow the D-Pins to engage the bottom cap.

6. Raise the U-beam assembly until the D-Pins engage in the bottom cap.

7. Install the D-Pin fasteners with the bolt heads on the forward side of the bottom cap, see Figure 8-48.

FIGURE 8-52 PRIMAAX | FIREMAAX, 8½", 10" Ride Height

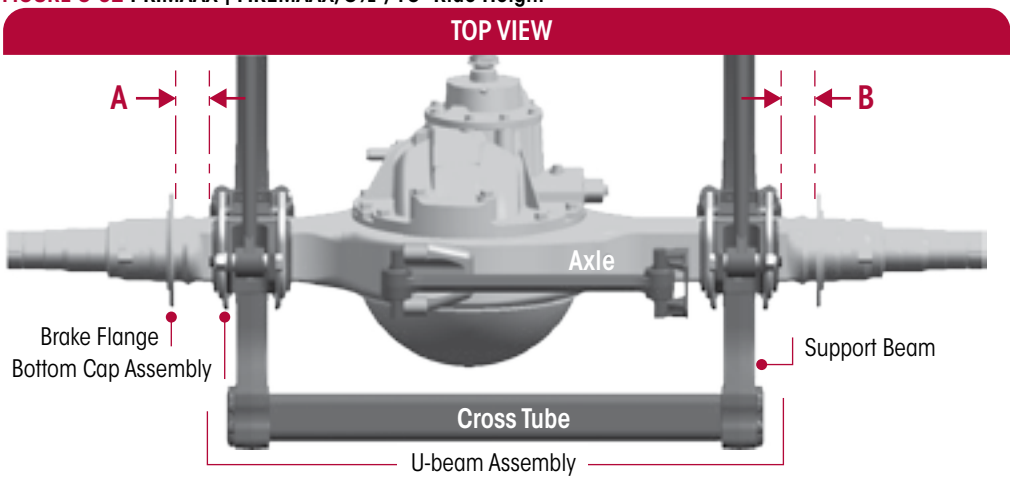

FIGURE 8-53

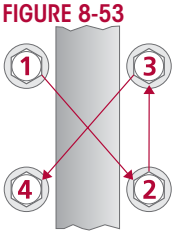

8. Lower the front differential to allow the full engagement of the D-Pins into the bottom caps.
9. Prior to tightening the D-pin fasteners, verify the bottom cap is centered over the support beam.
10. Tighten the D-Pin fasteners to 300 ± 25 foot pounds torque.
11. Tighten the U-bolt locknuts evenly in 50 foot pound increments in the proper pattern to achieve uniform bolt tension, see Figure 8-53.
12. Rap the top of the U-bolts with a dead blow mallet, and retighten to the proper torque. **DO NOT** exceed the specified tightening torque specified on the U-bolt locknuts. Tighten the ¾" locknuts to 375 ± 25 foot pounds torque.
13. Pivot the shock back into the lower shock mount and install the lower shock absorber mounting fasteners. Tighten the ⅝" locknuts to 213 ± 12 foot pounds torque.
14. Install the S-cam support bracket and fasteners (if equipped). Tighten the ⅜" locknuts to 35 ± 5 foot pounds torque. Tighten the 5/16" locknuts to 25 ± 5 foot pounds torque.
15. Install the air spring between the frame and the cross tube, see Figure 8-49.
    a. **PRIMAAX EX • FIREMAAX EX** — Ensure the **air spring slot** in the bottom of the air spring engages the **beam notch** on the top of the support beam.
    b. **PRIMAAX • FIREMAAX** — Ensure the **V notch** in the end cap engages the air spring **locator tab** on the air spring.
16. Install the lower air spring mounting bracket around the cross tube, engaging the mounting air spring studs, see Figure 8-49.
17. Install the lower mounting fasteners and tighten to 25 ± 5 foot pounds torque.
18. Install the tires (if removed).
19. Remove the jack stands and lower the frame of vehicle.
20. See additional Air Spring Cautions and Warnings in the Important Safety Notice Section of this publication prior to deflating or inflating the air system.
21. Connect the height control valve linkage(s) to the height control valve arm(s) to inflate the suspension.
22. Remove the wheel chocks.

S-CAM SUPPORT BRACKET (if equipped)

DISASSEMBLY

1. Chock the wheels.
2. Remove the S-cam U-bolt fasteners, see Figure 8-54.
3. Remove the S-cam U-bolt from the bracket and the S-cam housing.
4. Remove the fasteners connecting the S-cam support bracket from the bottom cap.
5. Remove the bracket and inspect components for wear or damage. Replace as necessary.

FIGURE 8-54

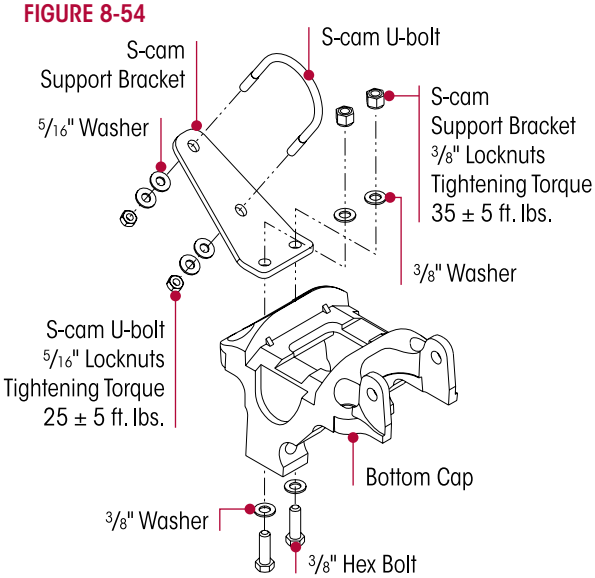

ASSEMBLY

1. Install the bracket on top of the bottom cap.
2. Install the S-cam 3/8" bolts, washers, and locknuts must be installed with the bolt heads on the underside of the bottom cap, see Figure 8-54. Tighten the locknuts to 35 ± 5 foot pounds torque.

SERVICE HINT S-cam 3/8" bolts must be installed with the bolt heads on the underside of the bottom cap to prevent interference between the support beam and the bolt fasteners during articulation.

3. Install the U-bolt around the S-cam housing and through the S-cam support bracket.
4. Install the 5/16" washers and locknuts. Tighten the locknuts to 25 ± 5 foot pounds torque.
5. Remove the wheel chocks.

AXLE STOPS

DISASSEMBLY

1. Chock the wheels.
2. Remove the fasteners connecting the axle stop to the frame.
3. Remove the axle stop.
4. Inspect the frame rail mounting surfaces for any cracks or damage.

ASSEMBLY

1. Install the axle stop on the frame.

NOTE The axle stops on vehicles with 12½", 14⅜", 15½" ride heights are specific to each axle position. Verify the correct axle stop is at the correct position before tightening the fasteners. For example, Axle stop Part No. 64696-003 is used only at the forward drive- left hand side position.

2. Install new mounting fasteners.
3. Tighten axle stop fasteners to the vehicle manufacturer's torque specifications.
4. Install any items removed
5. Remove the wheel chocks.

FRAME HANGER

■ All models except PRIMAAX • FIREMAAX Ride Height 12½", 14⅜", 15½"

WARNING

THIS PROCEDURE TO REPLACE A FRAME HANGER, IS DONE WITH THE REMAINING FRAME HANGERS CONNECTED TO THE FRAME AND IT IS ALSO NECESSARY THAT THE SUPPORT BEAMS AND THE LONGITUDINAL TORQUE RODS ARE ATTACHED TO THE REMAINING FRAME HANGERS. FAILURE TO DO SO COULD CAUSE THE AXLE TO SHIFT RESULTING IN POSSIBLE DAMAGE TO COMPONENTS OR PERSONAL INJURY.

SERVICE HINT

Increasing the pinion angle may facilitate the disassembly/assembly of the frame hanger. To increase the pinion angle place a floor jack under the axle pinion and raise slightly. This will increase the pinion angle slightly easing disassembly/assembly.

DISASSEMBLY

1. Chock the front wheels.
2. Support the frame.
3. Disconnect the height control valve arm(s) from the rubber grommet.

WARNING

PRIOR TO AND DURING DEFLATION AND INFLATION OF THE AIR SUSPENSION SYSTEM, ENSURE THAT ALL PERSONNEL AND EQUIPMENT ARE CLEAR FROM UNDER THE VEHICLE AND AROUND THE SERVICE AREA, FAILURE TO DO SO CAN CAUSE SERIOUS PERSONAL INJURY, DEATH, OR PROPERTY DAMAGE.

4. See additional Air Spring Cautions and Warnings in the Important Safety Notice Section of this publication prior to deflating or inflating the air system.

WARNING

SOME VEHICLE APPLICATIONS, SUCH AS VEHICLES EQUIPPED WITH OUTRIGGERS, RETAIN SOME AIR PRESSURE IN THE AIR SPRINGS AT ALL TIMES. PRIOR TO PERFORMING ANY MAINTENANCE, SERVICE, OR REPAIR OF THE SUSPENSION, VERIFY EACH AIR SPRING IS COMPLETELY DEFLATED. FAILURE TO DO SO COULD RESULT SERIOUS PROPERTY DAMAGE AND/OR SEVERE PERSONAL INJURY.

5. Lower the height control valve arm(s) to exhaust the air in the air springs and deflate the rear suspension.

SERVICE HINT

Each frame hanger will have a pair of QUIK-ALIGN collars. Any eccentric (with the square drive feature) QUIK-ALIGN collar should be mounted on the outboard side of the frame hanger. Axle thrust angles can only be corrected on frame hangers equipped with eccentric QUIK-ALIGN collars.

SERVICE HINT

Mark the position of the QUIK-ALIGN square drive in relationship to the frame hanger with a paint stick prior to loosening the QUIK-ALIGN connection. This will facilitate the axle alignment process after the repair is complete.

6. Remove the QUIK-ALIGN fasteners and collars, and note the orientation of the fasteners, see Figure 8-55. Discard the fasteners. The collars may be reused if they are not damaged.

FIGURE 8-55

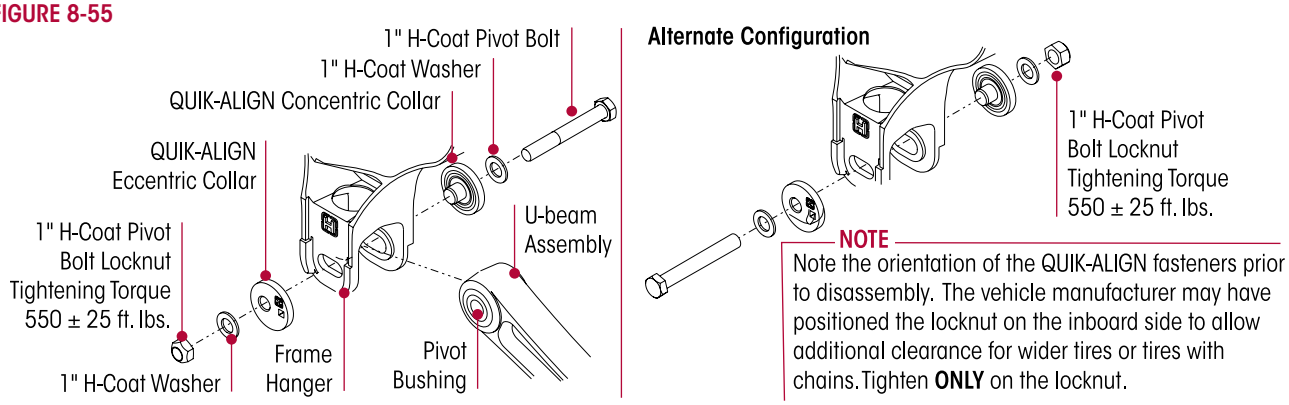

SERVICE HINT

Note the quantity of longitudinal shims removed to maintain the correct pinion angle of the axle at assembly. See Alignment & Adjustments Section of this publication.

7. Remove the fasteners and shim (if equipped) that attach the longitudinal torque rod to the frame hanger.
8. Remove the fasteners that attach the frame hanger to the vehicle per vehicle manufacturer's specifications.
9. Remove the frame hanger.
10. Inspect mounting surface for any damage or wear.
11. Inspect the QUIK-ALIGN pivot bushing and torque rod bushings for wear or damage, replace as necessary.

ASSEMBLY

1. Slide the new frame hanger over the support beam QUIK-ALIGN bushing.
2. Install the new fasteners that attach the frame hanger to the vehicle and tighten per the vehicle manufacturer's specifications.

⚠ WARNING

DISCARD USED QUIK-ALIGN FASTENERS. ALWAYS USE NEW QUIK-ALIGN FASTENERS TO COMPLETE A REPAIR. FAILURE TO DO SO COULD RESULT IN FAILURE OF THE PART, OR MATING COMPONENTS, ADVERSE VEHICLE HANDLING, PERSONAL INJURY, OR PROPERTY DAMAGE.

DO NOT ASSEMBLE QUIK-ALIGN JOINT WITHOUT THE PROPER FASTENERS. USE ONLY H-COATED FASTENERS TO SUSTAIN PROPER CLAMP FORCE. FAILURE TO DO SO CAN CAUSE ADVERSE VEHICLE HANDLING, PROPERTY DAMAGE OR PERSONAL INJURY AND VOID WARRANTY. ENSURE THAT THE QUIK-ALIGN FASTENER'S TORQUE VALUES ARE SUSTAINED AS RECOMMENDED IN THE TORQUE SPECIFICATIONS SECTION OF THIS PUBLICATION. FAILURE TO DO SO CAN CAUSE ADVERSE VEHICLE HANDLING RESULTING IN PERSONAL INJURY OR PROPERTY DAMAGE. FOLLOW VEHICLE MANUFACTURER'S FASTENER ORIENTATION WHEN PERFORMING ANY MAINTENANCE, SERVICE OR REPAIR.

NOTE

Use a new QUIK-ALIGN pivot bolt kit (see the Parts List Section of this publication) for any axle alignment or disassembly of the QUIK-ALIGN connection. This will help ensure that the proper clamp load is applied to the connection and help prevent the joint to slip in service.

3. Install the QUIK-ALIGN collars and the new mounting hardware that attach the support beam to the frame hanger, see Figure 8-55. Verify that the nose of each QUIK-ALIGN collar is installed correctly into pivot bushing sleeve, and the flanged side is flat against the frame hanger face within the alignment guides. Snug QUIK-ALIGN locknuts to 50-100 foot pounds torque, **DO NOT** tighten at this time.
4. Install the torque rod mounting fasteners and reinstall any shims that were removed during disassembly. Tighten the fasteners to the proper specification, see Torque Specification Section of this publication per model designation.
5. See additional Air Spring Cautions and Warnings in the Important Safety Notice Section of this publication prior to deflating or inflating the air system.
6. Connect the height control valve linkage rod(s) to the height control valve arm(s) to inflate the suspension properly.
7. Remove frame supports(s).
8. Verify that the axle is in proper alignment, see Alignment & Adjustments Section of this publication.

NOTE

It is mandatory to have the vehicle at proper ride height prior to tightening the 1.0" QUIK-ALIGN locknuts to torque specifications.

9. After the correct alignment of the axle is verified tighten the 1.0" QUIK-ALIGN locknuts to 550 ± 25 foot pounds torque.

10. Verify the correct pinion angle on the axle per original equipment manufacturer's specifications. Adjust as necessary per the Alignment & Adjustments Section of this publication.
11. Remove the chocks from the front wheels.

FRAME HANGER

■ PRIMAAX • FIREMAAX Ride Height 12½", 14⅜", 15½"

WARNING

THIS PROCEDURE TO REPLACE A FRAME HANGER IS DONE WITH THE THREE (3) REMAINING FRAME HANGERS CONNECTED TO THE FRAME. IT IS ALSO NECESSARY THAT THE SUPPORT BEAMS AND THE LONGITUDINAL TORQUE RODS ARE ATTACHED TO THE THREE (3) REMAINING FRAME HANGERS. FAILURE TO DO SO COULD CAUSE THE AXLE TO SHIFT RESULTING IN POSSIBLE DAMAGE TO COMPONENTS OR PERSONAL INJURY.

DISASSEMBLY

1. Chock the front wheels.
2. Support the frame.
3. Disconnect the height control valve arm(s) from the rubber grommet.

WARNING

PRIOR TO AND DURING DEFLATION AND INFLATION OF THE AIR SUSPENSION SYSTEM, ENSURE THAT ALL PERSONNEL AND EQUIPMENT ARE CLEAR FROM UNDER THE VEHICLE AND AROUND THE SERVICE AREA, FAILURE TO DO SO CAN CAUSE SERIOUS PERSONAL INJURY, DEATH, OR PROPERTY DAMAGE.

4. See additional Air Spring Cautions and Warnings in the Important Safety Notice Section of this publication prior to deflating or inflating the air system.

WARNING

SOME VEHICLE APPLICATIONS, SUCH AS VEHICLES EQUIPPED WITH OUTRIGGERS, RETAIN SOME AIR PRESSURE IN THE AIR SPRINGS AT ALL TIMES. PRIOR TO PERFORMING ANY MAINTENANCE, SERVICE, OR REPAIR OF THE SUSPENSION, VERIFY EACH AIR SPRING IS COMPLETELY DEFLATED. FAILURE TO DO SO COULD RESULT SERIOUS PROPERTY DAMAGE AND/OR SEVERE PERSONAL INJURY.

5. Lower the height control valve arm(s) to exhaust the air in the air springs and deflate the rear suspension.

SERVICE HINT

Each frame hanger will have a pair of QUIK-ALIGN collars. Any eccentric (with the square drive feature) QUIK-ALIGN collar should be mounted on the outboard side of the frame hanger. Axle thrust angles can only be corrected on frame hangers equipped with eccentric QUIK-ALIGN collars.

SERVICE HINT

Mark the position of the QUIK-ALIGN square drive in relationship to the frame hanger with a paint stick prior to loosening the QUIK-ALIGN connection. This will facilitate the axle alignment process after the repair is complete.

6. Remove the support beam QUIK-ALIGN locknut, pivot bolt, and collars see Figure 8-56.
7. Remove the longitudinal torque rod QUIK-ALIGN locknut, pivot bolt and collars.
8. Remove the fasteners that attach the frame hanger to the vehicle per the vehicle manufacturer's specifications.
9. Remove the frame hanger.
10. Inspect mounting surface for any damage or wear. Replace as necessary.
11. Inspect the QUIK-ALIGN pivot bushing and torque rod bushings for wear or damage, replace as necessary.

ASSEMBLY

1. Slide the new frame hanger over the support beam QUIK-ALIGN and longitudinal torque rod bushing.
2. Install the new fasteners from hanger to frame rail and tighten per the vehicle manufacturer's specifications.

FIGURE 8-56

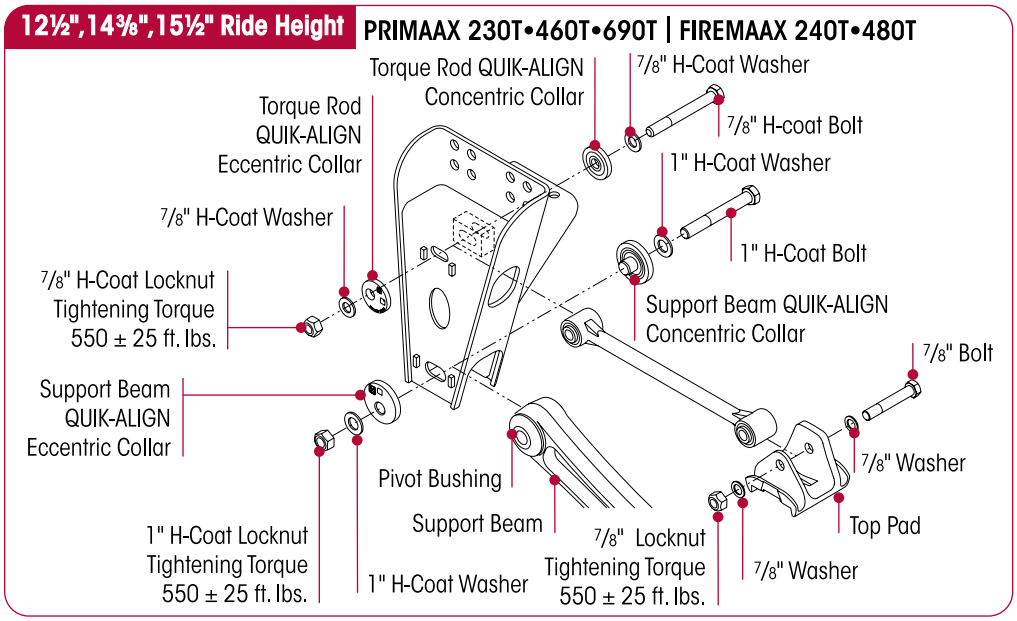

WARNING

DISCARD USED QUIK-ALIGN FASTENERS. ALWAYS USE NEW QUIK-ALIGN FASTENERS TO COMPLETE A REPAIR. FAILURE TO DO SO COULD RESULT IN FAILURE OF THE PART, OR MATING COMPONENTS, ADVERSE VEHICLE HANDLING, PERSONAL INJURY, OR PROPERTY DAMAGE.

DO NOT ASSEMBLE QUIK-ALIGN JOINT WITHOUT THE PROPER FASTENERS. USE ONLY H-COATED FASTENERS TO SUSTAIN PROPER CLAMP FORCE. FAILURE TO DO SO CAN CAUSE ADVERSE VEHICLE HANDLING, PROPERTY DAMAGE OR PERSONAL INJURY AND VOID WARRANTY. ENSURE THAT THE QUIK-ALIGN FASTENER'S TORQUE VALUES ARE SUSTAINED AS RECOMMENDED IN THE TORQUE SPECIFICATIONS SECTION OF THIS PUBLICATION. FAILURE TO DO SO CAN CAUSE ADVERSE VEHICLE HANDLING RESULTING IN PERSONAL INJURY OR PROPERTY DAMAGE. FOLLOW VEHICLE MANUFACTURER'S FASTENER ORIENTATION WHEN PERFORMING ANY MAINTENANCE, SERVICE OR REPAIR.

3. Attach the support beam and the longitudinal torque rod QUIK-ALIGN eccentric collars on the outboard side of the frame hanger and the QUIK-ALIGN concentric collars on the inboard side of the frame hanger.

NOTE

Use a new QUIK-ALIGN pivot bolt kit (see the Parts List Section of this publication) for any axle alignment or disassembly of the QUIK-ALIGN connection. This will help ensure that the proper clamp load is applied to the connection and help prevent the joint to slip in service.

4. Install the new QUIK-ALIGN collars and fasteners that attach the longitudinal torque rod to the frame hanger, see Figure 8-56. Verify that the nose of each QUIK-ALIGN collar is installed correctly into pivot bushing sleeve, and the flanged side is flat against the frame hanger face within the alignment guides. Snug QUIK-ALIGN locknuts to 100 foot pounds torque.
5. Verify that the longitudinal torque rod QUIK-ALIGN collars are flat against the hanger face and within the alignment guides. The longitudinal torque rod QUIK-ALIGN collars are flat.
6. See additional Air Spring Cautions and Warnings in the Important Safety Notice Section of this publication prior to deflating or inflating the air system.
7. Connect the height control valve linkage to the height control valve arm(s) to inflate the suspension.

NOTE

It is mandatory to have the vehicle at proper ride height prior to tightening the 1.0" QUIK-ALIGN and 7/8" Torque Rod QUIK-ALIGN locknuts to torque specifications.

8. Verify the axle is in proper alignment, see the Alignment & Adjustments Section of this publication.

9. After the correct alignment of the axle is verified tighten the 1.0" QUIK-ALIGN locknuts to 550 ± 25 foot pounds torque, see Figure 8-56.
10. Verify the correct pinion angle on the axle per original manufacturer's specifications.
11. Tighten the ⅞" QUIK-ALIGN longitudinal torque rod mounting fasteners to 550 ± 25 foot pounds torque.
12. Remove the chocks from the front wheels.

AFTERMARKET DUAL HEIGHT CONTROL VALVES

Although the PRIMAAX EX • FIREMAAX EX | PRIMAAX • FIREMAAX single and tandem suspensions does not require dual height control valves, Hendrickson understands there may be demand for this dual height control valve configuration in certain applications.

Hendrickson strongly recommends you review your vehicle application and contact the vehicle manufacturer and Hendrickson to obtain authorization to equip the vehicle with dual height control valves prior to installing dual height control valves on your vehicle, **failure to do so will void component warranty**.

Upon authorization from both the vehicle manufacturer and Hendrickson, dual height control valve service kits (Hendrickson Part No. 57977-000 Height Control Valve Assembly with HCV Mounting Bracket or 60501-000 Height Control Valve Assembly without HCV Mounting Bracket plus part no. 58994-005 Height Control Valve Linkage Assembly) are available to add a second height control valve on vehicles equipped with only one (1) height control valve.

To install a second height control valve proceed with the following installation instructions.

DUAL HEIGHT CONTROL VALVE INSTALLATION

1. Chock the wheels of the vehicle.

WARNING

PRIOR TO AND DURING DEFLATION AND INFLATION OF THE AIR SUSPENSION SYSTEM, ENSURE ALL PERSONNEL AND EQUIPMENT ARE CLEAR FROM UNDER THE VEHICLE AND AROUND THE SERVICE AREA, FAILURE TO DO SO CAN CAUSE SERIOUS PERSONAL INJURY, DEATH, OR PROPERTY DAMAGE.

2. See additional Air Spring Cautions and Warnings in the Important Safety Notice Section of this publication prior to deflating or inflating the air system.
3. Deflate the suspension by disconnecting the height control valve linkage and lowering the height control valve arm.

WARNING

SOME VEHICLE APPLICATIONS, SUCH AS VEHICLES EQUIPPED WITH OUTRIGGERS, RETAIN SOME AIR PRESSURE IN THE AIR SPRINGS AT ALL TIMES. PRIOR TO PERFORMING ANY MAINTENANCE, SERVICE, OR REPAIR OF THE SUSPENSION, VERIFY EACH AIR SPRING IS COMPLETELY DEFLATED. FAILURE TO DO SO COULD RESULT SERIOUS PROPERTY DAMAGE AND/OR SEVERE PERSONAL INJURY.

4. Measure the location on the frame of the existing height control valve mounting bracket and install the new frame bracket on the opposite side of the same axle. It will be necessary to drill the two (2) frame mounting holes for the new bracket.
5. Install the height control valve mounting bracket onto the frame as shown in Figure 8-57.

NOTE View plumbing diagram (Figure 8-57) to facilitate installation for the preceding Steps.

6. Install the new height control valve on the height control valve mounting bracket with the dump port and the height control valve arm facing the front of the vehicle.
7. Install a **T** fitting (not provided) in the air supply line to the original height control valve.
8. Install and route a new air supply line from the **T** fitting to the new height control valve intake port marked **E/I**.
9. Remove the opposite side air spring supply line from the original height control valve.
10. Plug the port on the original height control valve that the air spring supply line was removed from.

FIGURE 8-57

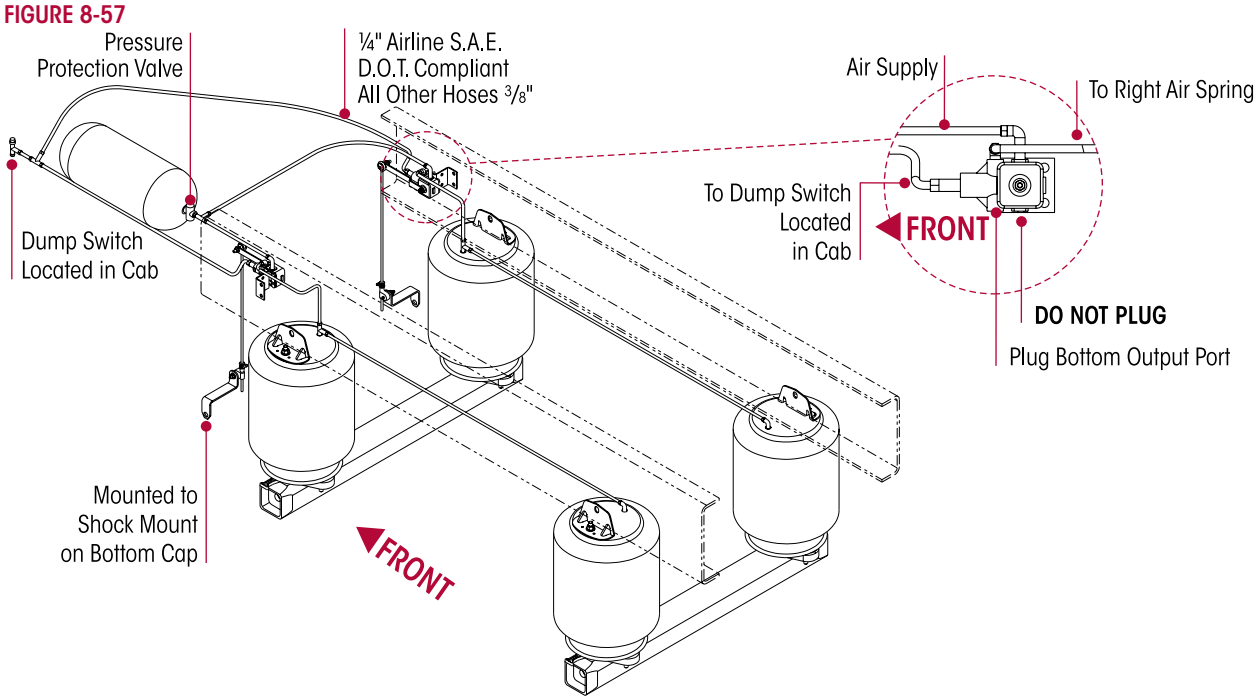

11. Route and install the air spring supply line into the port marked **C1/C2** on the new height control valve.
12. Plug the opposite port marked **C2/C1** on the new height control valve.
13. If the vehicle is equipped with a cab dump valve, install a **T** fitting into the dump switch supply line.
14. Install and route a new dump switch supply line from the **T** fitting to the new height control valve dump port.
15. Remove the lower shock mounting bolt on the side the new height control valve was installed.
16. Install the height control valve linkage bracket on the lower shock mounting bolt.
17. Install the lower shock mounting bolt and tighten to 213 ± 12 foot pounds torque.
18. Connect the height control valve linkage to the height control valve arm.
19. Connect the adjustable valve arm joint to the height control valve linkage bracket and tighten to 11 ± 1 foot pounds torque.
20. Follow the ride height adjusting procedure for dual height control valves as shown in the Alignment & Adjustments Section of this publication.

SECTION 9
Plumbing Diagrams

Tandem - Single Height Control Valve* Configuration
8½", 10" Ride Height

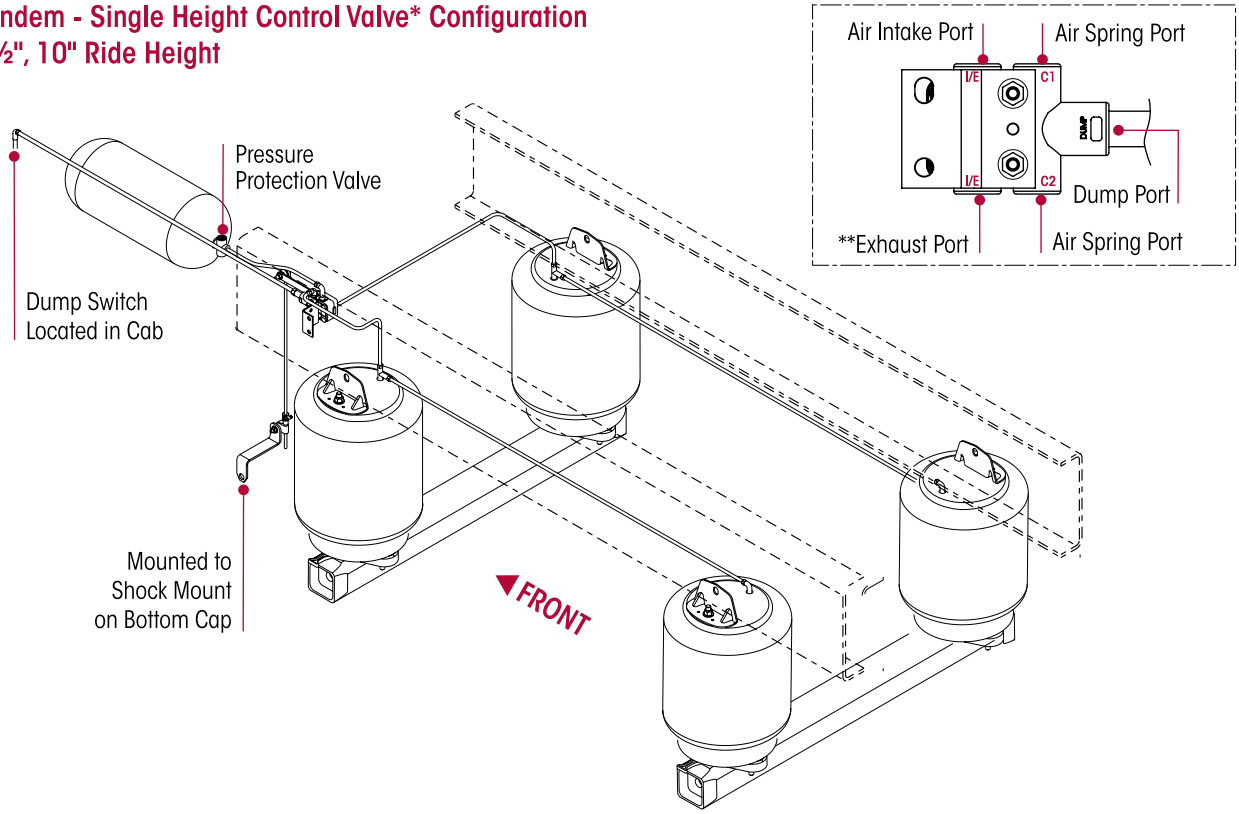

Tandem - Dual Height Control Valve* Configuration
12½", 14⅜", 15½" Ride Height

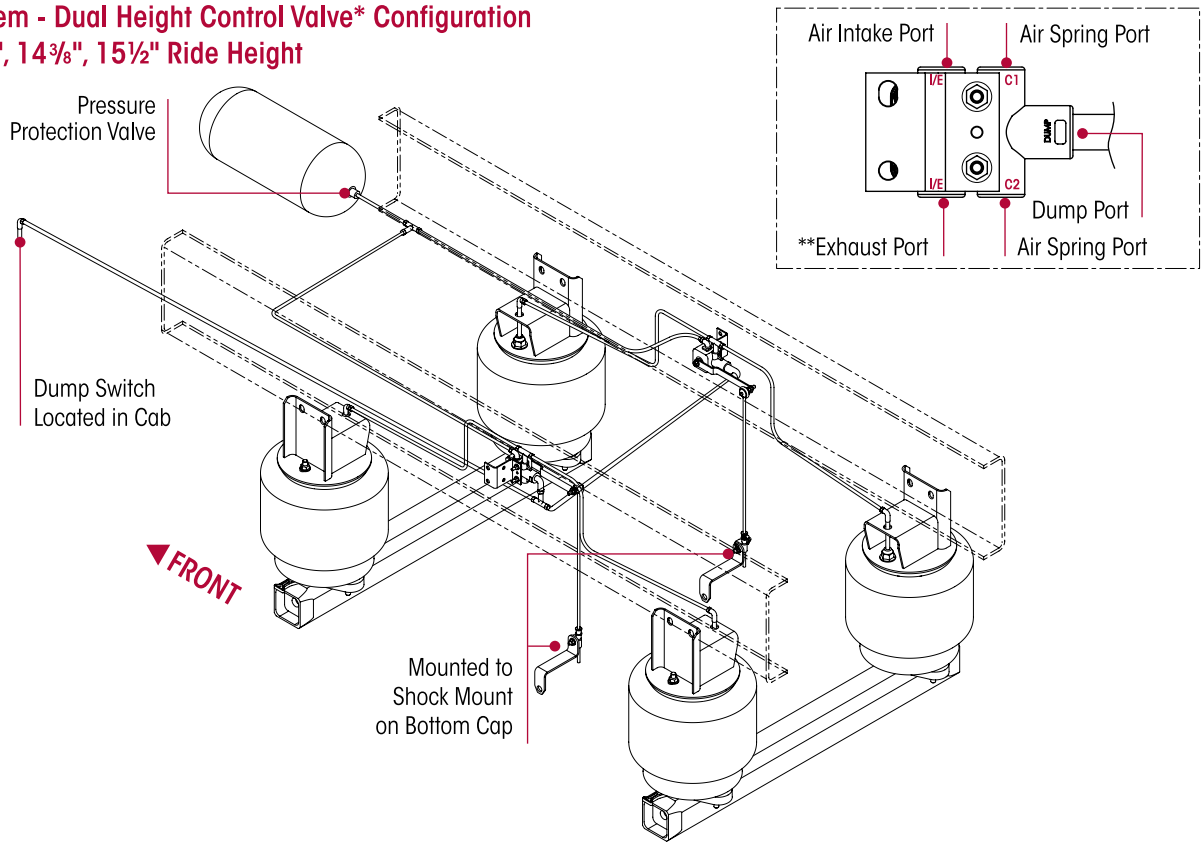

Single - Height Control Valve* Configuration
8½", 10" Ride Height

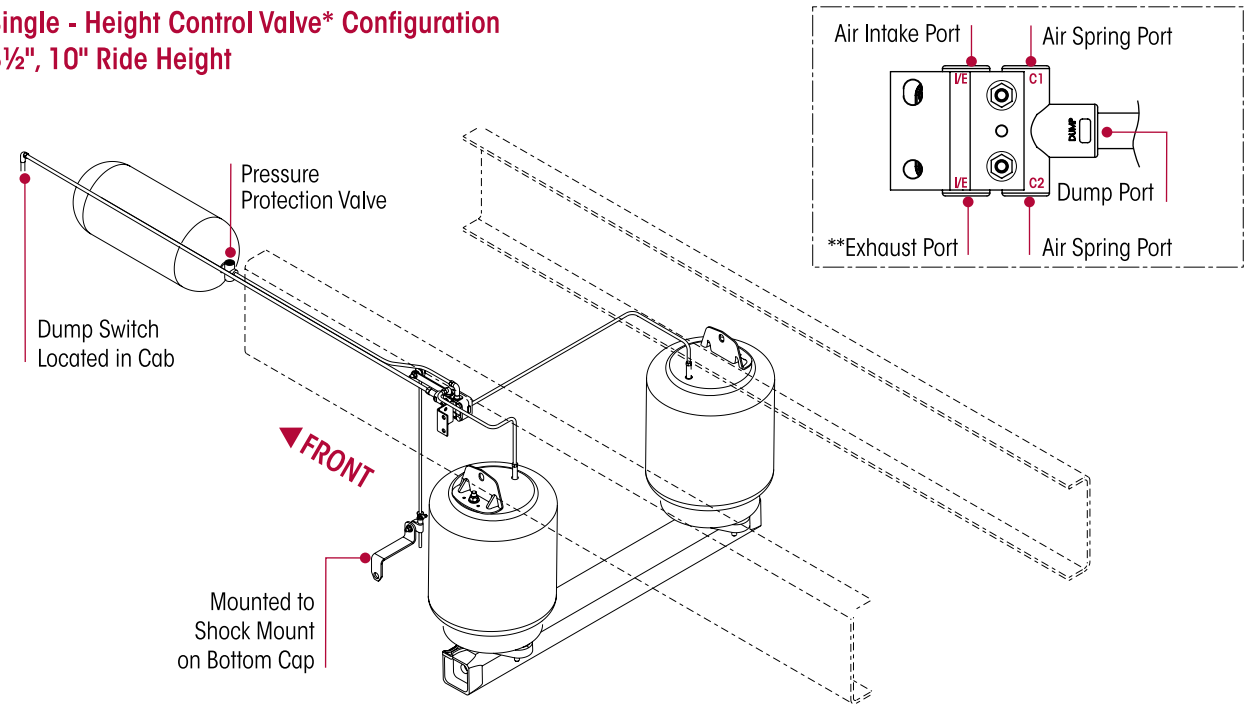

NOTE: * Common example configuration. Contact vehicle manufacturer for specific plumbing specifications
** Exhaust Port: May use muffler screen to keep dirt / debris out

SECTION 10
Torque Specifications

HENDRICKSON RECOMMENDED TORQUE SPECIFICATIONS (IN FOOT POUNDS)

LONGITUDINAL TORQUE ROD

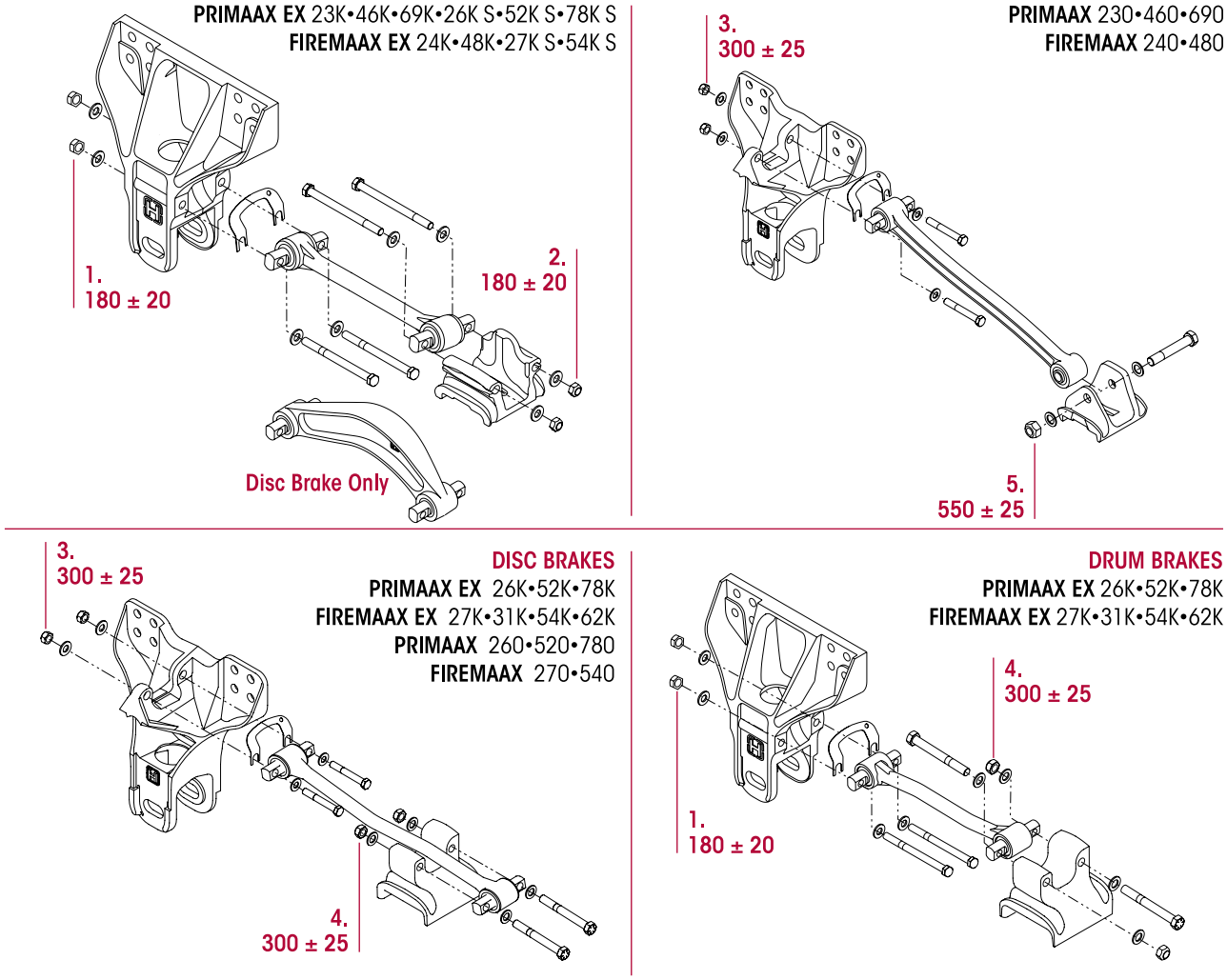

NO.	COMPONENT		*FASTENER		TORQUE VALUE (in foot pounds)
			**QUANTITY	SIZE	
1	Longitudinal Torque Rod	to Forward Hanger Mount	4	5/8"-11 UNC	180 ± 20
2		to Rear Top Pad Mount	4	5/8"-11 UNC	180 ± 20
3		to Forward Hanger Mount	4	3/4"-16 UNF	300 ± 25
4		to Rear Top Pad Mount	4	3/4"-16 UNF	300 ± 25
5		to Rear Top Pad Mount	2	7/8"-14 UNF	550 ± 25

NOTE: * Frame fasteners furnished and installed by vehicle manufacturer. Torque values listed above apply only if Hendrickson supplied fasteners are used. If non-Hendrickson fasteners are used, refer to vehicle manufacturer's torque specifications.

** Quantities shown are per axle. Double for Tandem, Triple for Tridem.

 • See Notes on Page 103

LONGITUDINAL TORQUE ROD - Tall Ride Height

PRIMAAX EX 23KT•46KT•69KT 26K ST•52K ST•78K ST
FIREMAAX EX 24KT•48KT•27K ST•54K ST

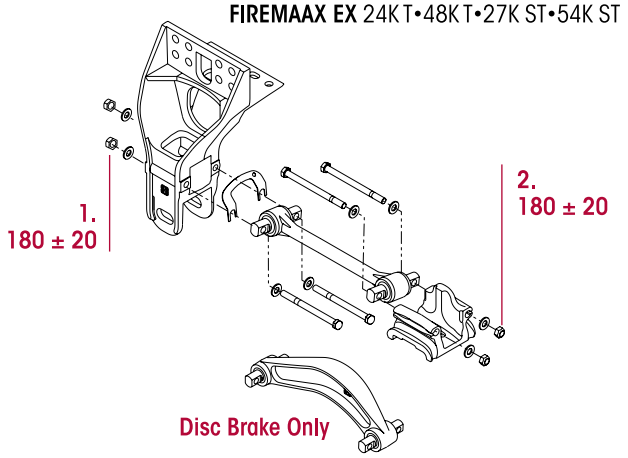

PRIMAAX 230T•460T•690T
FIREMAAX 240T•480T

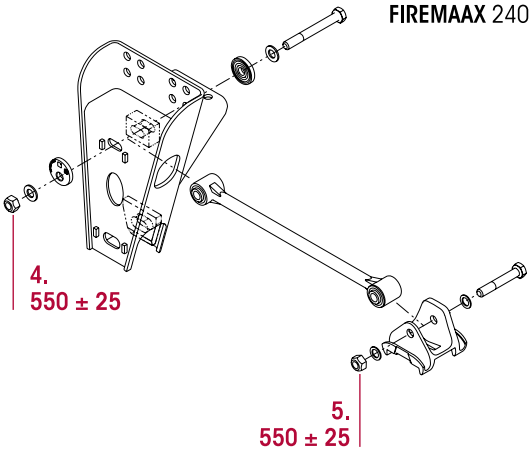

DISC BRAKES
PRIMAAX EX 26KT•52KT•78KT
FIREMAAX EX 27KT•31KT•54KT•62KT

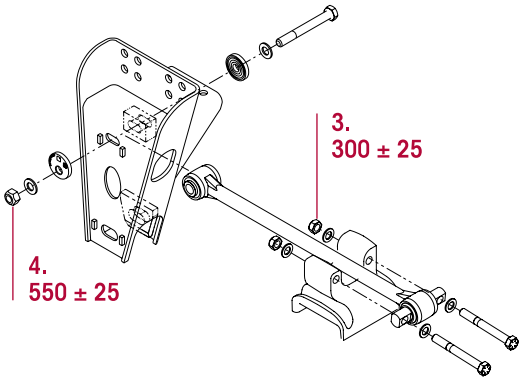

DRUM BRAKES
PRIMAAX EX 26KT• 52KT• 78KT
FIREMAAX EX 27KT• 31KT• 54KT•62KT

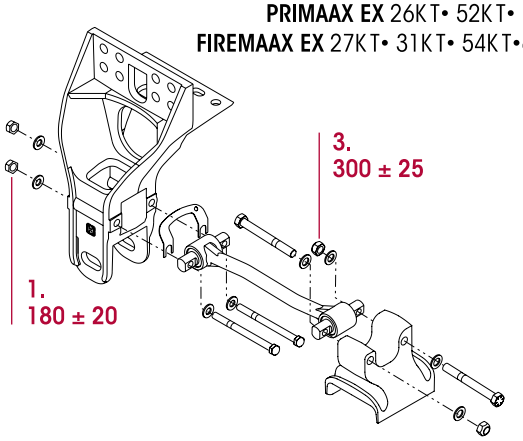

NO.	COMPONENT		*FASTENER		TORQUE VALUE (in foot pounds)
			**QUANTITY	SIZE	
1	Longitudinal Torque Rod	to Forward Hanger Mount	4	5/8"-11 UNC	180 ± 20
2		to Rear Top Pad Mount	4	5/8"-11 UNC	180 ± 20
3		to Rear Top Pad Mount	4	3/4"-16 UNF	300 ± 25
4		to Forward Hanger	2	7/8"-9 UNC	550 ± 25
5		to Rear Top Pad Mount	2	7/8"-14 UNF	550 ± 25

TRANSVERSE TORQUE ROD Frame Hanger May Vary - Straddle/Taper

NO.	COMPONENT		TORQUE VALUE (in foot pounds)
1	Transverse Torque Rod	Taper Pin	200 ± 25
2		Taper Pin 5/8"-11 UNC nut	65 ± 5

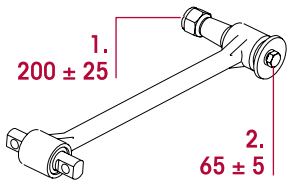

• See Notes on Page 103

S-CAM SUPPORT BRACKET

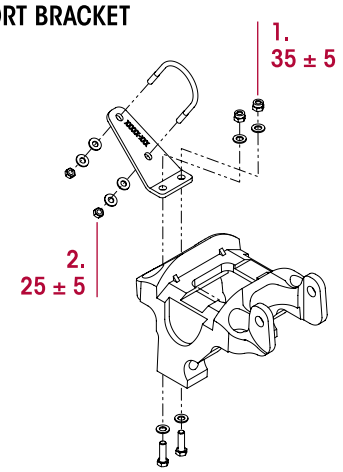

U-BOLT CONNECTION

Top Pad May Vary

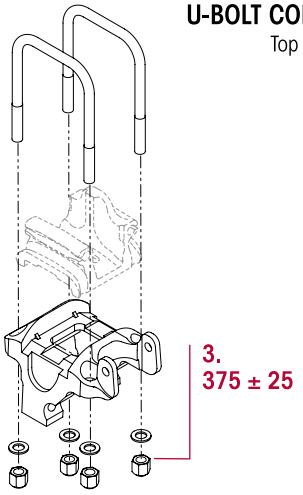

NO.	COMPONENT	*FASTENER		TORQUE VALUE (in foot pounds)
		**QUANTITY	SIZE	
1	S-cam Support Bracket To Bottom Cap Mount	4	3/8"-16 UNC	35 ± 5
2	S-cam Support Bracket To U-bolt Locknuts	4	5/16"-18 UNC	25 ± 5
3	U-bolt Locknuts	8	3/4"-16 UNF	375 ± 25

AIR SPRING Upper Air Spring Bracket May Vary

8½", 10" Ride Height

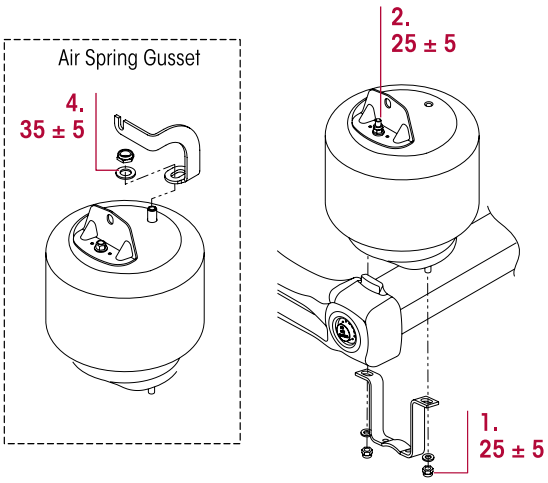

12½", 14⅜", 15½" Ride Height

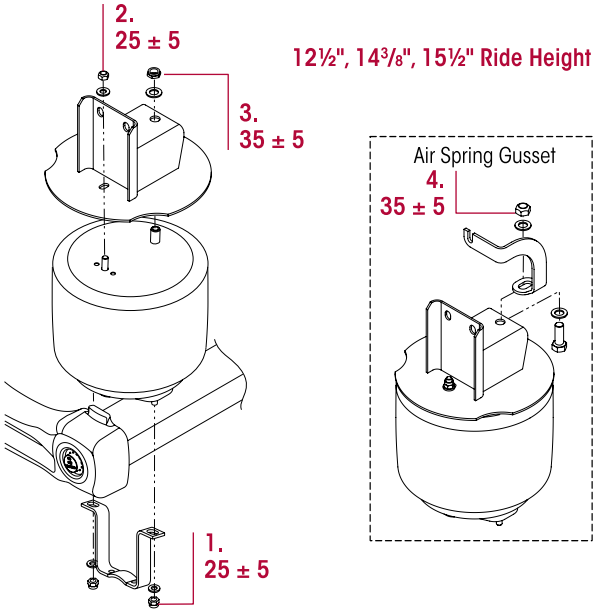

NO.	COMPONENT	*FASTENER		TORQUE VALUE (in foot pounds)
		**QUANTITY	SIZE	
1	Lower Air Spring Bracket to Cross Tube	4	½"-13 UNC	25 ± 5
2	Upper Air Spring Assembly	2	½"-13 UNC	25 ± 5
3	Upper Air Spring Assembly to Air Spring Bracket	2	3/4"-16 UNF	35 ± 5
4	Air Spring Assembly to Air Spring Gusset	4	3/4"-10 UNC	35 ± 5

• See Notes on Page 103

QUIK-ALIGN • D-PIN CONNECTION

Frame Hanger May Vary

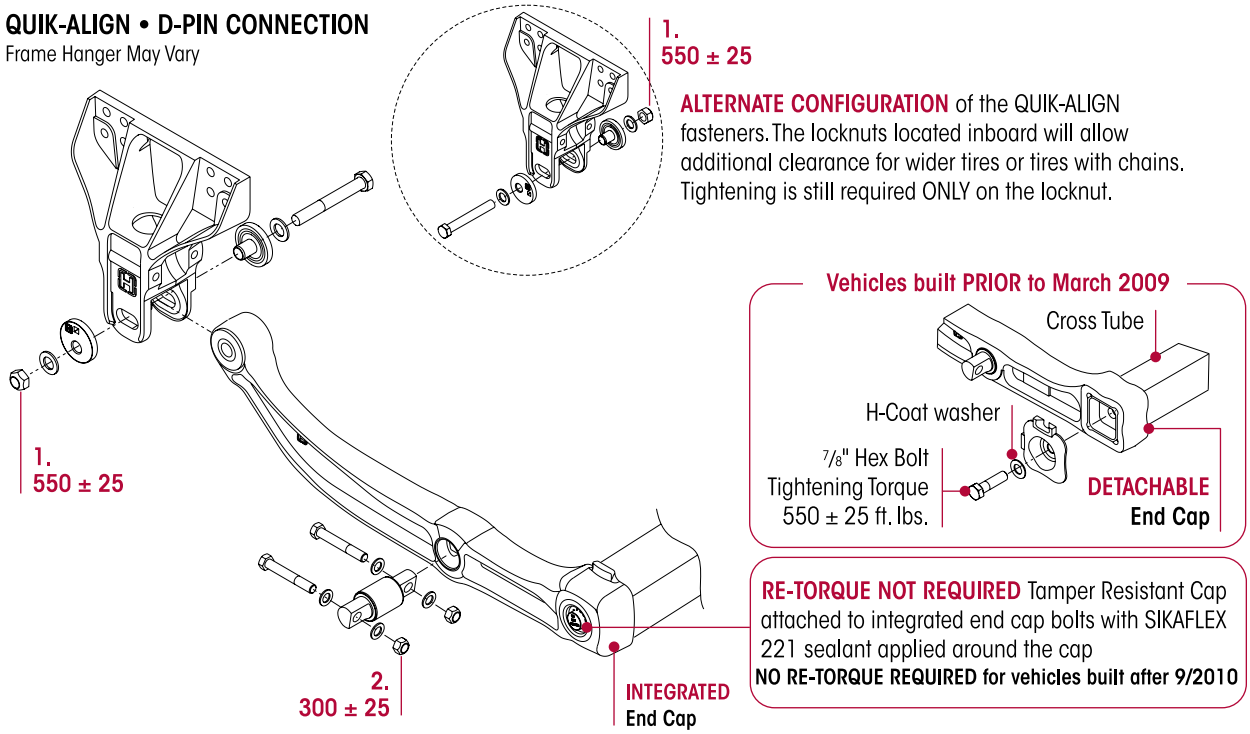

NO.	COMPONENT		*FASTENER		TORQUE VALUE (in foot pounds)
			**QUANTITY	SIZE	
1	U-beam Assembly	to QUIK-ALIGN Bushing	2	1"-14 UNF	550 ± 25
2		to D-Pin Bushing	4	3/4"-16 UNF	300 ± 25
				7/8"-14 UNF	

SHOCK ABSORBER

Upper Shock Bracket May Vary

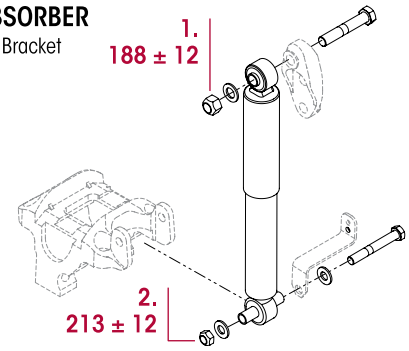

HEIGHT CONTROL VALVE

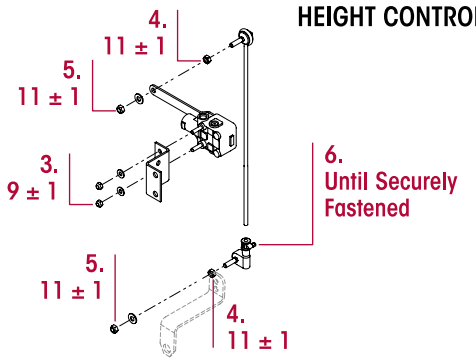

NO.	COMPONENT		*FASTENER		TORQUE VALUE (in foot pounds)
			**QUANTITY	SIZE	
1	Upper Shock Absorber Locknuts		2	3/4"-10 UNC	188 ± 12
2	Lower Shock Absorber Locknuts		2	5/8"-11 UNC	213 ± 12
3	Height Control Valve	to HCV Frame Bracket	2	1/4"-20 UNC	9 ± 1
4		Linkage Jam Nut	2	5/16"-18 UNC	11 ± 1
5		Linkage to HCV / HCV Linkage Bracket	2	5/16"-18 UNC	11 ± 1
6		Linkage Clamp	1		Until Securely Fastened

SECTION 11
Troubleshooting Guide

TROUBLESHOOTING GUIDE		
CONDITION	**POSSIBLE CAUSE**	**CORRECTION**
Suspension has harsh or bumpy ride	Air spring not inflated to specification or damaged	Repair air system and check ride height. See Ride Height Adjustment in the Alignment & Adjustments Section.
	Ride height set incorrectly	Adjust ride height to proper setting. See Ride Height Adjustment in the Alignment & Adjustments Section.
	Suspension is overloaded	Redistribute load to correct weight.
	Broken support beam	Replace broken U-beam assembly.
Irregular tire wear	Incorrect tire inflation pressure	Correct tire pressure per vehicle manufacturer and tire manufacturer specifications.
	Incorrect alignment	Correct the alignment. Refer to the Alignment & Adjustments Section.
	Worn QUIK-ALIGN bushing	Replace QUIK-ALIGN bushing.
	Loose QUIK-ALIGN attachment	Replace QUIK-ALIGN connection, and check vehicle alignment. Adjust if necessary. Check frame hanger for wear around QUIK-ALIGN plates and replace if necessary.
	Worn torque rod bushings	Replace torque rod bushings as necessary.
Excessive driveline vibration	Incorrect pinion angle(s)	Adjust pinion angle(s), refer to the vehicle manufacturer for specifications.
	Loose QUIK-ALIGN attachment	Replace QUIK-ALIGN connection, and check vehicle alignment. Adjust if necessary. Check frame hanger for wear around QUIK-ALIGN plates and replace if necessary.
	Ride height set incorrectly	Adjust ride height to proper setting. See Ride Height Adjustment in the Alignment & Adjustments Section.
	Broken support beam	Replace U-beam assembly.
Suspension is noisy	Loose QUIK-ALIGN attachment	Replace QUIK-ALIGN connection, and check vehicle alignment. Adjust if necessary. Check frame hanger for wear around QUIK-ALIGN plates and replace if necessary.
	Loose U-bolts	Tighten U-bolts to specifications, see Preventive Maintenance Section.
	Loose end caps (if equipped)	Inspect end caps and the support beam to cross tube connection for damage. Repair as necessary, re-torque end cap to specification, see Torque Specifications Section.
	Worn bushings	Replace bushings as necessary.
Vehicle bouncing excessively	Damaged or leaking shock absorber	Replace shock absorber.
	Ride height set incorrectly	Adjust ride height to proper setting. See Ride Height Adjustment in the Alignment & Adjustments Section.

TROUBLESHOOTING GUIDE		
CONDITION	**POSSIBLE CAUSE**	**CORRECTION**
Vehicle leaning	Air spring not inflated to specification or damaged	Repair air system and check ride height. See Ride Height Adjustment in the Alignment & Adjustments Section in this publication.
	Load not centered	Redistribute the load.
	Frame twisted	Straighten the frame per vehicle manufacturer's guidelines.
	Broken support beam	Replace broken U-beam assembly.
	Axle housing bent or broken	Replace axle housing per vehicle manufacturer guidelines and align vehicle.
	Loose U-bolts	Tighten U-bolts to specifications, see Preventive Maintenance Section.
	Front suspension	Inspect and repair front suspension.
Suspension will not reach ride height	Suspension is overloaded	Redistribute load to correct weight.
	Air Spring leaking or damaged	Replace air spring.
	Leak in air system	Inspect air fittings, see Air Fitting Inspection in the Preventive Maintenance Section of this publication. If necessary, repair air system and check ride height. See Ride Height Adjustment in the Alignment & Adjustments Section of this publication.
	Air line obstructed or improperly connected	Repair air system and check ride height. See Ride Height Adjustment in the Alignment & Adjustments Section.
	HCV dump port activated	Check HCV dump port for proper connection and function
Air springs deflate when parked	Leak in air system	Inspect air fittings, see Air Fitting Inspection in the Preventive Maintenance Section of this publication. If necessary, repair air system and check ride height. See Ride Height Adjustment in the Alignment & Adjustments Section of this publication.
	Malfunctioning Height Control Valve	See test procedure in Preventive Maintenance Section, replace height control valve as necessary.
Excessive frame slope	Ride height set incorrectly	Adjust the ride height to proper setting. See Ride Height Adjustment in the Alignment & Adjustments Section of this publication. Contact Hendrickson Tech Services.
	Suspension is overloaded	Redistribute load to correct weight

www.hendrickson-intl.com

HENDRICKSON®

Truck Commercial Vehicle Systems
800 South Frontage Road
Woodridge, IL 60517-4904 USA

1.866.755.5968 (Toll-free U.S. and Canada)
1.630.910.2800 (Outside U.S. and Canada)
Fax 1.630.910.2899

Information contained in this literature was accurate at the time of publication. Product changes may have been made after the copyright date that are not reflected.
© 2003 – 2018 Hendrickson USA, L.L.C. All Rights Reserved