TECHNICAL PROCEDURE

TRAILER SUSPENSION SYSTEMS
HLS® WHEEL-END SYSTEM

SUBJECT: Hub Maintenance Procedures

LIT NO: T72004
DATE: March 2018 **REVISION:** B

HENDRICKSON
The World Rides On Us®

TABLE OF CONTENTS

Conventions Applied in this Document **3**
Explanation of Signal Words 3
Important Safety Notices 3
Links 3
General Service Notes **3**
During Service: 3
Contacting Hendrickson 4
Relative Literature 4
Preparing Trailer for Service 4
Introduction **5**
Tools Required 5
Inspection 6
Checking for Seal Leaks 6
Checking for Smooth Rotation 7
Checking End Play 7
Removing and Installing Hub **9**
Hub Removal 9
Spindle Preparation 9
Preparing hub for re-Installation 9
Install 3-piece Spindle nut **11**
Inspecting Hub Installation 12
Install Hubcap 12
Completing Installation 13
Additional Information **13**
Hub SF Grease Dam 13
Torque Values 13
Wheel Stud Removal and Installation Procedure 13

LIST OF TABLES

Table 1. Relative wheel-end literature 4
Table 2. List of required tools 5
Table 3. Outer jam nut torque values. 12
Table 4. HLS® Wheel-end fastener torque values 13

CONVENTIONS APPLIED IN THIS DOCUMENT

This section explains techniques used in this document to convey important information, safety issues, how to contact Hendrickson and how to apply hyperlinks.

EXPLANATION OF SIGNAL WORDS

Hazard signal words (such as DANGER, WARNING or CAUTION) appear in various locations throughout this publication. Information accented by one of these signal words must be observed at all times. Additional notes are utilized to emphasize areas of procedural importance and provide suggestions for ease of repair. The following definitions comply with ANSI Z535.4 and indicate the use of safety signal words as they appear throughout the publication.

⚠DANGER: INDICATES IMMEDIATE HAZARDS WHICH WILL RESULT IN SEVERE PERSONAL INJURY OR DEATH.

⚠WARNING: Indicates hazards or unsafe practices which could result in severe personal injury or death.

⚠CAUTION: Indicates a hazardous situation which, if not avoided, could result in minor or moderate injury.

NOTICE: Indicates hazards or unsafe practices which could result in damage to machine or equipment.

IMPORTANT: An operating procedure, practice or condition that is essential to emphasize.

⚠ Safety alert symbol used to indicate a condition exists that may result in personal injury or harm to individuals. It must be applied to DANGER, WARNING and CAUTION statements, which emphasize severity.

IMPORTANT SAFETY NOTICES

Safety and precautionary statements are listed in Hendrickson literature number T12007 and available at www.Hendrickson-intl.com/TrailerLit.

Warnings and cautions should be read carefully to help prevent personal injury and to assure that proper methods are used. Improper maintenance, service or repair can cause damage to the vehicle and other property, personal injury, an unsafe operating condition and potentially void the manufacturer's warranty.

LINKS

Links are identified by a dark grey line under the linked text. Internal links allow the reader to jump to a heading, step or page in this document. External links open the website or document referenced.

GENERAL SERVICE NOTES

Proper installation, maintenance, service and repair is important to the reliable operation of the suspension system. The procedures recommended by Hendrickson and described in this publication are methods of performing inspection, maintenance, service and repair.

Before you begin:
Read, understand and comply with:

- All instructions and procedures.
- All signal word (CAUTION, WARNING and DANGER) statements to help avoid personal injury or property damage.
- Company's maintenance, service, installation and diagnostic practices.
- Vehicle manufacturer's safety instructions when working on the vehicle.
- Vehicle manufacturer's instructions for recommended practices not described in this manual.
- Local safety regulations.

DURING SERVICE:

- Work must be carried out by trained personnel.
- Sudden release of parking springs (e.g. the spring brake part of the brake chamber or the brake return spring) may cause injury.
- Use recommended tools only.
- Before releasing trailer back into service, perform operational checks and test the trailer to ensure brakes are working correctly.

Hendrickson reserves the right to make changes and improvements to its products and publications at any time. Consult the Hendrickson website (www.hendrickson-intl.com) for the latest version of this manual.

NOTICE: Accessory-type hubcaps, such as the chrome "top hat" style hubcap, can potentially increase wheel-end temperatures during operation and are not recommended for use on Hendrickson extended-service wheel ends.

CONTACTING HENDRICKSON

Contact Hendrickson Trailer Technical Services for technical assistance as needed. To do so, several options are available. Technical Services must be contacted before performing any warranty related service.

Prior to contacting Technical Services, it is best to have the following information about the vehicle and Hendrickson suspension available (all that apply):

- Suspension ID Tag information (Refer to Hendrickson Literature Number L977 *Trailer Suspension and Axle ID Guide*, for ID tag location and details):
  - Suspension model number
  - Suspension serial number
  - Approximate number of suspension miles
- VIN plate data. Refer to trailer OEM manual for VIN plate location.
  - Trailer Type (van, reefer, flat bed, etc.)
  - Manufacturer
  - VIN (vehicle identification number)
  - In-service date [1]
- If applicable, description of the system problem, part number and/or part description of the reported non-functioning part.
  - Date of problem
  - Where applicable: location of problem on suspension / trailer (e.g., road side, front axle, rear axle, curb side rear, etc.)
  - Symptoms-
    - » Systems, components or function affected by the problem.
    - » When does the problem occur?
    - » How often does the problem occur?
    - » Etc.
- Any troubleshooting and/or measurements have been performed.
- Digital photos of suspension and damaged areas.
- Special application approval documentation (if applicable).

EMAIL

To contact **H**endrickson **T**railer **T**echnical **S**ervices, use the following e-mail address:

HTTS@Hendrickson-intl.com

[1] If the in-service date is unknown or not available, the vehicle date of manufacture can be substituted.

PHONE

Contact Hendrickson directly in the United States at **866**-RIDEAIR (**743-3247**). From the menu, select:

- **Technical Services**/Warranty for technical information.
- Other selections include:
  - **Aftermarket Sales** for replacement parts information and ordering.
  - **Original Equipment Sales** for parts inquiries and ordering for trailer manufacturers.

RELATIVE LITERATURE

If you suspect your version of this or any other Hendrickson manual is not "Up-to-Date", the most current version is free online at:

www.hendrickson-intl.com/TrailerLit

Available Hendrickson documentation can be viewed or downloaded from this site.

Other relative literature may include:

NAME	DESCRIPTION
L578	*Preventive Maintenance Guide*
L583	*Comprehensive Warranty Statement*
L829	*Hubcap Decal: HLS® Wheel-End ID*
L831	*Trailer Decal: HLS® Wheel-End ID*
L974	*Drum Brake Maintenance Procedures*, heading "RETRACTING THE BRAKE SHOES OR SLACK ADJUSTER CONTROL ARM(S)"
T71004	*Hub and Rotor Assembly and Caliper Mounting Procedures*
T82006	*Stud Replacement Procedure*

Table 1: Relative wheel-end literature

PREPARING TRAILER FOR SERVICE

Information for trailer preparation, safety and precautionary statements, refer to Hendrickson literature number T12007, available at www.Hendrickson-intl.com/TrailerLit.

NOTE: DO NOT service a suspension or any NOTE: **DO NOT** service a suspension or any components that is under warranty without first contacting Hendrickson Technical Services. Refer to CONTACTING HENDRICKSON for details.

⚠**WARNING: Do not work under a trailer supported only by jacks. Jacks can slip or fall over, resulting in serious personal injury. Always use safety stands to support a raised trailer.**

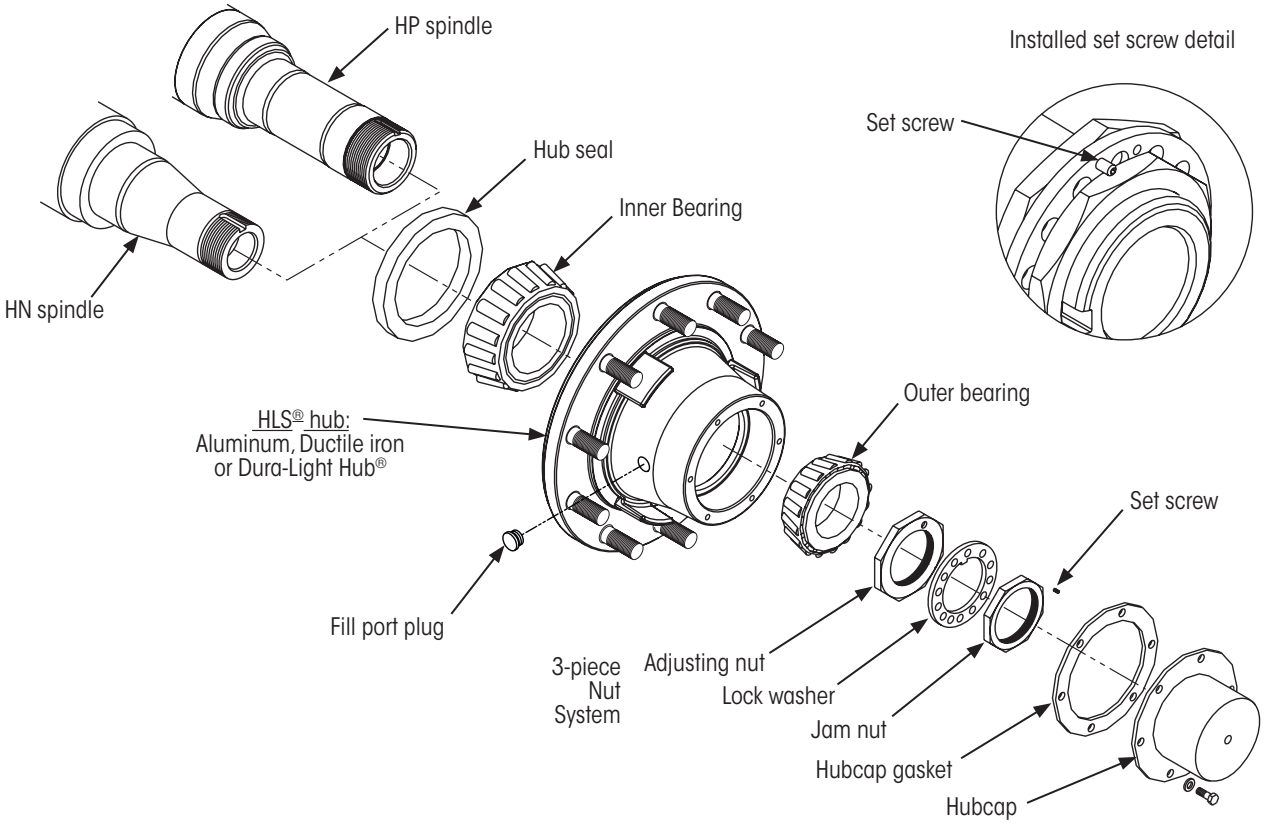

Figure 1: HLS® Hendrickson Long-Life System™ wheel-end parts identification

INTRODUCTION

The HLS® Hendrickson Long-Life System™ hub assembly (Figure 1) comes pre-assembled, adjusted and lubricated from Hendrickson. Because we control the assembly, internal cleanliness, bearing adjustment and seal installation in our facilities, we can offer premium performance and an extended-service warranty on these hub assemblies.

The HLS system is available with ductile iron, aluminum or Dura-Light Hub® that are field serviceable with Hendrickson authorized components. However, DO NOT remove the HLS hubcap or attempt any kind of field service without first CONTACTING HENDRICKSON Technical Services. **Wheel-end repairs performed prior to contacting Hendrickson Technical Services voids the warranty. Refer to L583 for details.**

NOTE: Hendrickson recommends HP spindle type for offset super single tire applications. Refer to Hendrickson literature number L846 *Wide Base Tire Configurations* for more details. The HN spindle design is not approved for use with any offset single wheel.

TOOLS REQUIRED

The following tools may be required during the performance of some maintenance procedures:

TOOL [1]		WHERE USED
Torque Wrench (10 - 400 ft. lbs. or 13 - 542 Nm)		To be used with sockets listed in this table.
HN	3 7/8 inch socket	Inner adjusting nut
	3 1/4 inch socket	Outer jam nut
HP	4 7/8 inch socket	Inner adjusting nut
	4 3/8 inch socket	Outer jam nut
5/64 inch hex key		3-piece nut system set screw
1/2 inch socket		Hubcap fasteners
1/4 or 5/16 inch hex key		Lube fill port plug
Dial Indicator, with mounting stand (resolution to 0.0001", 0.002 mm)		End-play measurement. Refer to Figure 4 on page 7.
Hub SF Grease Dam		HUB AND OUTER BEARING ASSEMBLY on page 10, Figure 13 for template

Table 2: List of required tools

IMPORTANT: Torque (Table 4 on page 13) cannot be properly applied with an ordinary wrench. A calibrated torque wrench must be used to tighten fasteners to specified values.

INSPECTION

At regular intervals, the HLS® hub assembly should be checked for seal leaks and smooth rotation.

⚠WARNING: Prior to performing inspection procedures, help ensure conditions are safe by following steps in section PREPARING TRAILER FOR SERVICE.

NOTE: Recommended inspection intervals is based on an average trailer usage of 100,000 miles (160,000 km) per year. Higher usage would require more frequent inspections. Refer to Hendrickson literature number L578 *Suspension Preventive Maintenance Guide* for more details.

Inspections should be performed:

- **Daily** pre-operation check. This would include a general walk around to check for signs of obvious damage, wear or other abnormalities.
- **Every month**, visually inspect back of hub and hubcap gasket for leakage. Refer to the section titled CHECKING FOR SEAL LEAKS for complete inspection details.
- **Every three to four months**:
  - Perform monthly inspection.
  - Check for smooth rotation.
    - » Refer to the section titled CHECKING FOR SMOOTH ROTATION for details.
    - » If assistance is required or the hub feels rough, sounds noisy or does not rotate freely, refer to CONTACTING HENDRICKSON Technical Services department for further assistance.
- **During brake service** - at this time, wheels are removed making it easy to perform quarterly inspections.

Refer to Hendrickson literature number L578 for additional recommended suspension inspection procedures.

CHECKING FOR SEAL LEAKS

The HLS® hub assembly is filled with semi-fluid grease at the factory during the assembly process. The grease is contained in the hub by the hub seal where leakage can occur (Figure 1 on page 5).

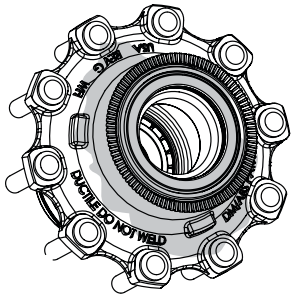

Figure 2: Check back side of hub for grease seal leak

To check for leaks, look at the inboard side of the hub, (Figure 2). A small amount of grease may be visible at the hub seal. **This is a normal occurrence and does not necessarily indicate a seal leak.** Wipe clean.

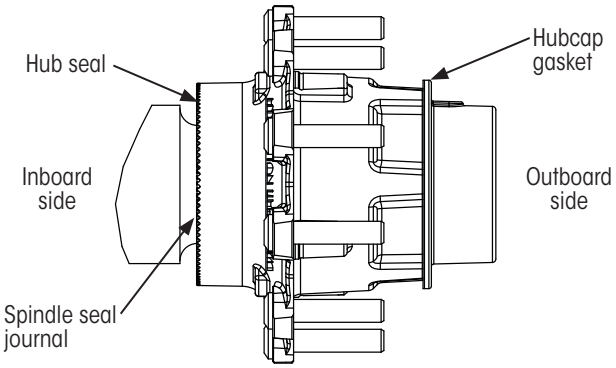

Figure 3: Areas where leaks may occur

A small amount of grease may also appear at the spindle bearing shoulder to hub joint (Figure 3) **This is also normal and does not necessarily indicate a seal leak.** It should be wiped clean to minimize any accumulation of dirt.

NOTICE: Pressure or steam washing should be avoided in this area as water could be forced past the seal and degrade lubricant performance and corrode bearings.

If the hub seal is leaking, a large quantity of grease will be present. If you see this condition, refer to CONTACTING HENDRICKSON Technical Services for guidance on how to proceed.

CHECKING FOR SMOOTH ROTATION

Many factors can effect smoothness of rotation. Primary causes include:

- Bearing wear
- Damaged hub seal
- Debris

NOTE: A reasonable assessment can be performed without removing tires and rims. However, this procedure is best performed with hub only as shown in Figure 5.

1. **Ensure** trailer is secure per PREPARING TRAILER FOR SERVICE on page 4.
2. **Disengage** brakes and remove brake drum (recommended).
3. While maintaining physical contact, **slowly rotate** hub in both directions at least five revolutions.
4. **During rotation**, ensure smooth and quiet rotation. Bearings should move smoothly. Feel for any resistance in movement. Any debris in bearings should be felt as it moves over rollers in bearings.

IMPORTANT: If bearings feel rough, sound noisy or DO NOT rotate freely, DO NOT place the suspension back into service. Refer to CONTACTING HENDRICKSON Technical Services for guidance.

CHECKING END PLAY

This procedure must be performed when:

- After CONTACTING HENDRICKSON Technical Services, before removing the hubcap (as stated on hubcap label), for guidance relative to suspected wheel end play movement.
- **Installing** hub and required during INSTALL 3-PIECE SPINDLE NUT on page 11, Step 9.

1. If not already done so:
   A. **Perform** PREPARING TRAILER FOR SERVICE on page 4.
   B. **Remove** wheel (tires and rims).
   C. **Remove** hubcap and discard gasket.
   D. **Remove** drum (recommended).
   E. **Disengage** brakes.

IMPORTANT: End play can be checked with brake drum installed or removed (preferred). If installed, **ensure all brake drum wheel fasteners are installed and tightened to manufacturers specifications** before checking end play.

2. **Ensure** hub hubcap mounting surface and end of spindle are clean and totally free of any burrs or debris.
3. **Rotate** hub **at least 5 revolutions** to ensure bearings are fully seated.

NOTE: The hub MUST be rotated before performing end play measurement. Rotation works the rollers into their fully seated positions against the bearing cone shoulder. **Failure to rotate hub could result in a false end play reading**.

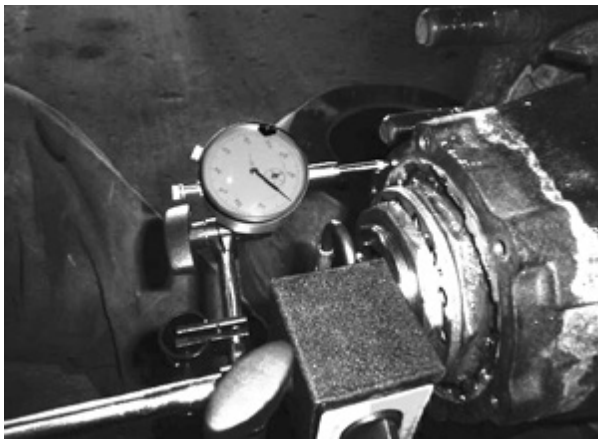

Figure 4: Checking end play

4. **Attach dial indicator** (Table 2) with magnetic base to flat surface at end of spindle (Figure 4).
5. **Adjust dial indicator** so its pointer line of action is parallel to spindle axis and touches hub's hubcap mounting surface. Ensure the plunger contacts the hub on a surface that is smooth and fully machined. Any regions with scratches, gouges or non-cleanup should be avoided.
6. **Check** indicator for free movement in both directions. Lightly **push and pull** on indicator arm to verify plunger is free to move at least .005" in each direction. If indicator bottoms out, readjust until it is free to move .005" in both directions.
7. **Zero** indicator.

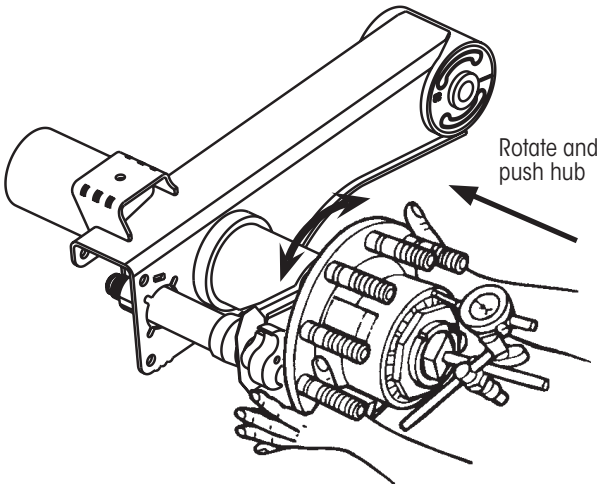

Figure 5: Checking inward end-play

8. **Grasp** hub flange, as shown in Figure 5, and **push** the hub inward **while rotating** hub slightly in both directions (15 - 30° between two holes) until the dial indicator reading remains constant. **Record** reading.

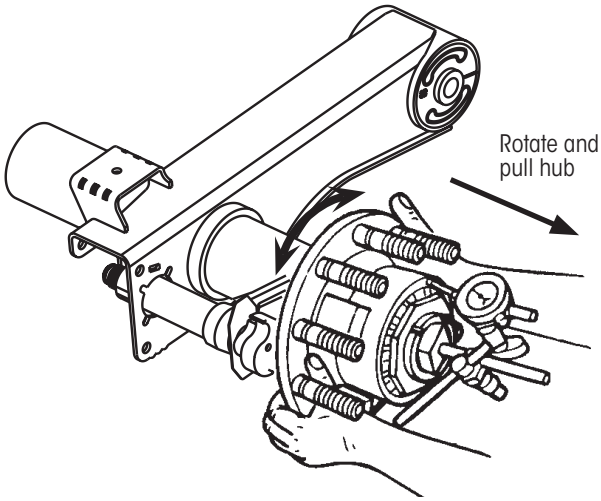

Figure 6: Checking outward end-play

9. While still **grasp**ing hub (Figure 6), **pull** hub outward **while rotating** hub slightly in both directions (15 - 30° between two holes) until dial indicator reading remains constant. **Record** reading.

10. End play is the total movement of the indicator. **Calculate difference** between recorded values of Step 8 and Step 9 to determine end play, **record** value.

IMPORTANT: End play must be between 0.001" (0.0254 mm) and 0.005" (0.0127 mm). If subsequent readings are necessary, the hub must be rotated at least 5 revolutions to reseat the bearings (refer to Step 3).

A. **If checking after** INSTALL 3-PIECE SPINDLE NUT on page 11, return to Step 9.

B. If end play is **NOT within specification**, refer to CONTACTING HENDRICKSON Technical Services for guidance on required next steps.

IMPORTANT: If end play is not within specifications, **DO NOT** place suspension back into service without correcting the problem.

C. If end play is **within specification**, no bearing adjustment is necessary. Continue to next step.

11. **Refer to** Figure 10 on page 11 and **check** to ensure:

A. Adjusting nut is secure

B. Lock washer and tang are properly seated

C. Outer jam nut and retaining set screw are securely in place (Figure 10 on page 11).

D. If not already done so, perform CHECKING FOR SEAL LEAKS on page 6.

12. Go to INSTALL HUBCAP on page 12.

REMOVING AND INSTALLING HUB

IMPORTANT: To ensure continued warranty, **DO NOT** perform the following procedures without obtaining prior authorization by CONTACTING HENDRICKSON Trailer Technical Services.

⚠WARNING: Prior to performing maintenance procedures, ensure conditions are safe. Refer to PREPARING TRAILER FOR SERVICE on page 4.

HUB REMOVAL

Only after receiving proper authorization from Hendrickson Technical Services, use the following procedure to remove HLS® hub assembly:

1. **Remove** tire / wheel assembly.
2. **Disengage** brakes and **remove** brake drum.
3. **Remove** hubcap screws (Table 2) and hubcap, **discard** gasket.
4. Using a $^{5}/_{64}$ inch hex key, **remove** set screw from interlock washer (Figure 1 on page 5 and Figure 10 on page 11).
5. **Remove** spindle nuts and lock washer.
6. **Carefully pull** HLS hub assembly slightly toward spindle end. A short quick motion should allow outer bearing to exit the hub. Be prepared to catch outer bearing if it slides off the end of the spindle. Otherwise, simply remove it.
7. **Remove** hub from spindle. The inner bearing is held in hub by the hub seal and should come off with hub.
8. **Remove** and **discard** hub seal:
   A. **If the seal is in the hub** - a pry bar can be used to carefully remove the seal from the hub bore. Damage to hub and hub surfaces must be avoided.
   B. **If the seal is on the spindle** - Using a brass, leather or other soft-faced mallet, drive the seal off the spindle by carefully striking the seal from the back side.

   NOTICE: Any damage to the spindle's machined surfaces can affect wheel end performance.
9. **Remove, clean and inspect** inner bearing. Replace if needed.

SPINDLE PREPARATION

Before installing or re-installing the hub, follow this procedure to ensure spindle machined surfaces are clean and undamaged.

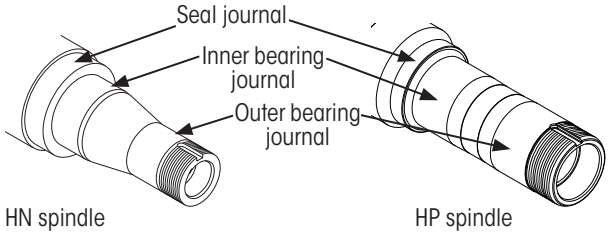

Figure 7: Spindle seal & bearing journals

1. **Remove** old lubricant and thoroughly clean spindle.
2. **Inspect** machined spindle journals (Figure 7) for nicks, scratches, burrs or marks. If needed, use crocus cloth or emery cloth to repair any damaged areas.
3. **Clean** spindle threads and keyway thoroughly with a wire brush to avoid false bearing adjustments and to avoid introduction of contaminants into the lubricant cavity.
4. **Thoroughly clean** spindle machined surfaces of rust, dirt, grease or any other contaminants that could damage the hub seal and cause it to leak.
5. **Lubricate** spindle bearing surfaces with clean Chevron Delo® Synthetic Grease SF.

   NOTICE: To minimize fretting and damage to wheel-end, lubricate all components and applicable surfaces using the same lubricant.

PREPARING HUB FOR RE-INSTALLATION

Even when installing a new hub, it is a good idea to inspect and prepare the hub before installation.

1. **Thoroughly clean** the hub bore of any dirt, grease, rust or any other substance that may be present.
2. **Remove** all sharp edges, nicks and burrs from seal bore, hubcap bore and hubcap mounting surface of the hub.
3. **Inspect** hub seal bore for roughness. If needed, use emery cloth to remove any burrs or old bore sealant and wipe hub clean.
4. **Ensure** hubcap mounting surface is smooth and free of debris.

NOTE: HLS requires **Chevron Delo® Synthetic Grease SF**.

5. **Apply lubricant** to inner bearing.
6. **Install** inner bearing into hub (Figure 1 on page 5).

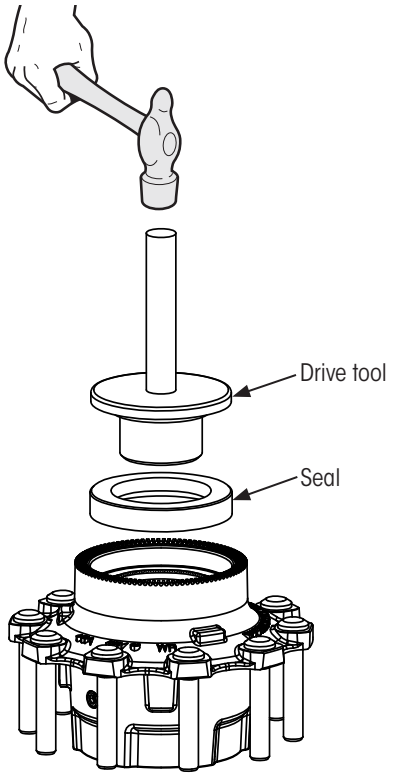

Figure 8: Hub-mounted seal installation

NOTE: A hub seal driver (Figure 8) is recommended and can be obtained from seal manufacturer.

7. **Lubricate** seal according to seal manufacturer's recommendations.
8. **Place** seal onto the drive tool (Figure 8) for installation into the hub according to seal manufacturer's instructions.
   A. **Align** seal tool with hub seal bore.
   B. **Drive** seal until it bottoms out in the hub seal bore.
   C. **Rotate** installation tool and apply several light blows to ensure seal is properly seated.
   D. **Check** inner bearing to ensure it rotates freely.

HUB AND OUTER BEARING ASSEMBLY

With seal and inner bearing in place; the hub, SF (Semi-Fluid) grease and the outer bearing can now be installed onto the spindle; in that order.

⚠CAUTION: For safety reasons, to prevent injury and damage to the hub and spindle, lifting equipment may be required to lift and support the hub as it is being installed onto the spindle.

NOTE: Refer to MAKING A HUB SF GREASE DAM on page 13 for instructions on making the dam.

NOTICE: When completed, the hub should be filled to 50% of hub cavity (to 3 & 9 o'clock position when viewing from end of spindle). Any air bubbles or aeration of grease may result in insufficient grease quantity, bearing spalling and wheel-end damage.

1. Taking care not to damage the seal, **gently slide** the hub onto spindle until the seal is against the spindle seal journal (Figure 7).

NOTICE: The HUB SEAL CAN BE DAMAGED if:

- **Hub seal is improperly installed.**
- **Hub seal is rammed into the spindle bearing shoulder.**
- **Hub is not kept supported and aligned with spindle until the outer bearing and axle nut are installed.**
- **Lubricant types are mixed during hub assembly.**

2. **Support** and DO NOT allow hub to move off center while completing the assembly.

NOTICE: If the hub is not properly supported, the seal could be damaged.

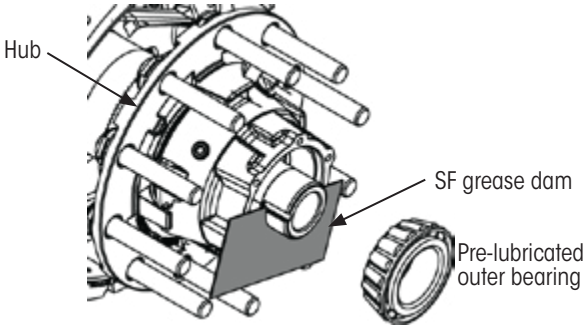

Figure 9: SF grease dam application

3. With the hub supported in position as shown in Figure 9, **place and hold** the SF grease dam so it covers the lower half the hub opening.

4. **Fill** hub cavity to the top of the dam (3 & 9 o'clock position when viewing from end of spindle) with Chevron Delo® Synthetic Grease SF.

5. **Pre-lube** outer bearing with a coating of SF grease.

6. **Place** grease coated outer bearing over the spindle and against the SF Grease Dam.

7. **Slide** the dam out as the bearing is inserted into the hub outer bearing cup.

8. **Clean** as needed to remove grease from unwanted areas.

NOTE: While sliding hub onto spindle, grease is collected at the spindle seal journal inboard of the hub (Figure 3 on page 6). This may be later interpreted as a grease leak and should be cleaned.

9. Continue with INSTALL 3-PIECE SPINDLE NUT.

INSTALL 3-PIECE SPINDLE NUT

The HLS® hub system uses a 3-piece spindle nut system (Figure 10).

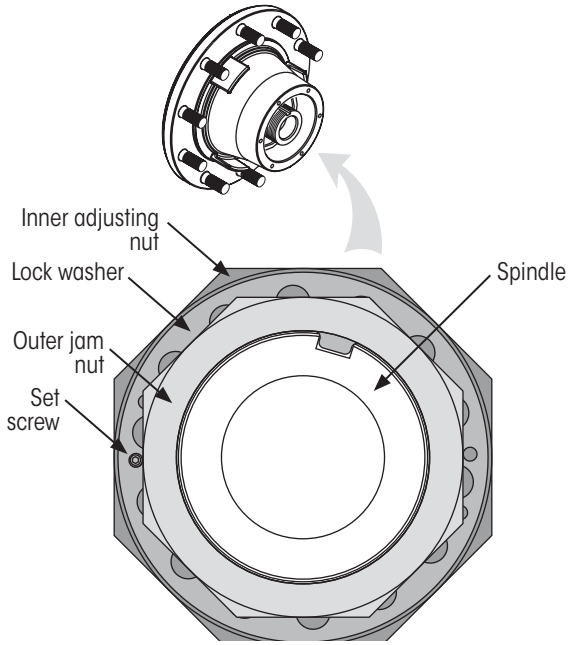

Figure 10: 3-piece nut system components

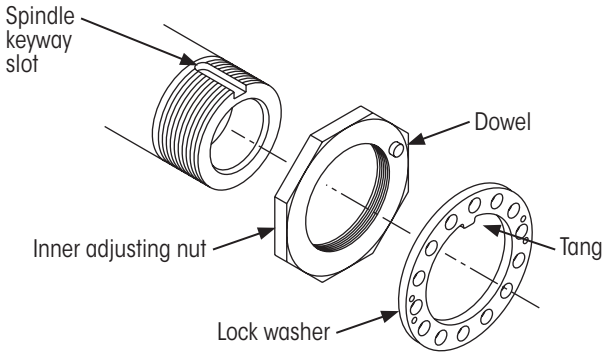

Figure 11: Inner adjusting nut and lock washer installation

⚠WARNING: FAILURE TO FOLLOW THESE INSTRUCTIONS COULD CAUSE WHEEL TO COME OFF AND CAUSE BODILY INJURY.

OVER-TIGHTENING NUT COULD CAUSE BEARINGS TO RUN HOT AND BE DAMAGED.

1. **Install** inner adjusting nut (Figure 11) on spindle, dowel side out, and tighten to 200 ft. lbs. (271 Nm) of **torque while rotating** wheel.

2. **Back off** inner adjusting nut one full turn.

3. **Rotate** wheel at least 5 revolutions.

4. **Tighten** inner adjusting nut to 50 ft. lbs. (68 Nm) of torque while rotating wheel.

5. **Back off** the inner adjusting nut ¼ turn.

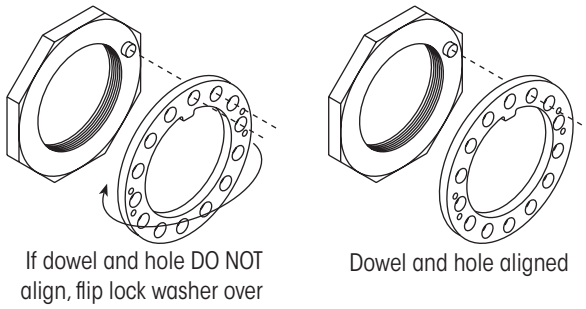

Figure 12: Align adjusting nut dowel with hole in lock washer

6. **Install** lock washer (Figure 11). Ensure lock washer tang fits in the spindle keyway slot and inner adjusting nut dowel fits in one of the holes in the lock washer. If this alignment cannot be achieved, remove the lock washer, flip it over and reinstall (Figure 12).

NOTICE: DO NOT tighten inner adjusting nut for dowel pin alignment. This can excessively pre-load bearings, resulting in premature failure.

If the dowel and hole still don't line up, loosen the inner adjusting nut slightly until alignment occurs.

7. **Install** outer jam nut (Figure 1 on page 5).
8. **Tighten** outer jam nut to:

SPINDLE	TORQUE
HN	315 ft. lbs. (427 Nm)
HP	385 ft. lbs. (522 Nm)

Table 3: Outer jam nut torque values.

9. **Perform** CHECKING END PLAY on page 7. Return with the recorded end play value to determine how to proceed.

IMPORTANT: End play must be between 0.001" (0.0254 mm) and 0.005" (0.0127 mm).

A. If end play is **within specifications**, go to next step to install set screw.

B. **If excessive end play** (greater than 0.005").

i. **Remove** outer jam nut (Figure 10).

ii. **Pull** lock washer away from hub, but not entirely off the spindle.

iii. **Tighten** inner nut so its dowel aligns with the next alignment hole in the lock washer.

NOTE: If a smaller tightening increment is desired, remove lock washer from the spindle, flip it over, reinstall it on the spindle and tighten inner nut so its dowel aligns with the next alignment hole in the lock washer (Figure 12).

iv. **Slide** lock washer up against inner nut and install outer jam nut.

v. **Tighten** jam nut according to Table 3.

vi. **Recheck** wheel bearing end play. Continue to adjust until end play is within the range specified, then go to Step 10

C. **If insufficient end play** (less than 0.001"):

i. Without rotating wheel, **remove** outer jam nut.

ii. **Pull** lock washer away from hub, but not entirely off spindle.

iii. **Loosen** inner adjusting nut so its dowel aligns with the previous alignment hole in lock washer.

NOTE: If a smaller loosening increment is desired, remove lock washer from spindle, flip it over, reinstall it on spindle and loosen inner adjusting nut so its dowel aligns with the previous alignment hole in lock washer (Figure 12).

iv. **Slide** lock washer up against inner adjusting nut and install outer jam nut. Tighten nut according to Table 3.

v. **Repeat** CHECKING END PLAY on page 7, starting at Step 3.

10. **Install** set screw (Figure 1 on page 5) into an accessible threaded hole in lock washer (Figure 10). Set screw must contact inner adjusting nut. Tighten to 18±2 in. lbs. (2.0±0.2 Nm) of torque.

INSPECTING HUB INSTALLATION

To ensure correct installation, follow these procedures:

1. **Ensure** lock washer is properly positioned and flush with inner adjusting nut at dowel pin (Figure 10 and Figure 12).
2. **Ensure** set screw contacts nut face. When properly installed, the set screw will be approximately half the height of the outer jam nut.
3. Test for free hub rotation, perform CHECKING FOR SMOOTH ROTATION on page 7.

INSTALL HUBCAP

After the hub installation and inspection is complete, the hubcap can be installed.

IMPORTANT: Always install a new gasket when reinstalling hubcap.

NOTICE: Interference between nut system and hubcap could occur if improper components are used. Use only genuine Hendrickson or Hendrickson approved replacement components. Refer to RELATIVE LITERATURE on page 4 or CONTACTING HENDRICKSON on page 4 as needed.

1. **Visually inspect** hubcap, hub mating surface, bolt holes and new gasket for:
   - Signs of damage

- Debris, such as silicon gasket sealer
- Burrs or sharp edges
- Cracks

2. **Clean, repair or replace** as needed.
3. **Align** hubcap and new gasket onto hub and **insert** screws.
4. **Hand-tighten** screws.
5. Using a star pattern, **torque** hubcap screws to 15±3 ft. lbs. (20±4 Nm) torque.

NOTICE: DO NOT overtighten hubcap screws. Overtightening will distort metal hubcap mounting flange, which will prevent hubcap from achieving a leak-free seal.

COMPLETING INSTALLATION

1. **Spin hub** more than three revolutions to distribute lubricant equally in hub bore.
2. **Install** brake **drum**.
3. **Install** wheel (tire and rim assembly) Refer to Brake DRUM AND WHEEL ASSEMBLY in Hendrickson literature number T82006 *Stud Replacement Procedures*.
4. If service is complete, **restore** trailer to normal operation.

ADDITIONAL INFORMATION

HUB SF GREASE DAM

Use of the hub SF grease dam, during assembly, is the recommended method of lubricating the hub with SF grease. Refer to HUB AND OUTER BEARING ASSEMBLY on page 10 for instructions on how to use the Hub SF Grease Dam.

MAKING A HUB SF GREASE DAM

To make a semi-fluid grease dam, follow the instructions on the face of the template (Figure 13 on back cover). Use cardboard, plastic or other flat stiff material.

TORQUE VALUES

Table 4 lists torque values for HLS wheel-end fasteners.

FASTENER	TORQUE	
	ft. lbs.	Nm
Hubcap Screws	15±3	20±4
Hub fill port plug	22±2	30±3
HN outer jam nut	315	427
HP outer jam nut	385	522
Wheel Nuts [1, 2]	475±25	644±25
	in. lbs.	Nm
3-piece spindle nut set screw	18±2	2.0±0.2

[1] These fasteners are incrementally tightened according to procedures defined in this manual and superseded by OE documentation, where applicable. Refer to decal T70013 *Wheel Assembly Procedure*.

[2] Re-torque all wheel nuts after 50 to 100 miles of service.

Table 4: HLS® Wheel-end fastener torque values

WHEEL STUD REMOVAL AND INSTALLATION PROCEDURE

Refer to Hendrickson literature number T82006 *Stud Replacement Procedures* for detailed instructions on wheel stud removal.

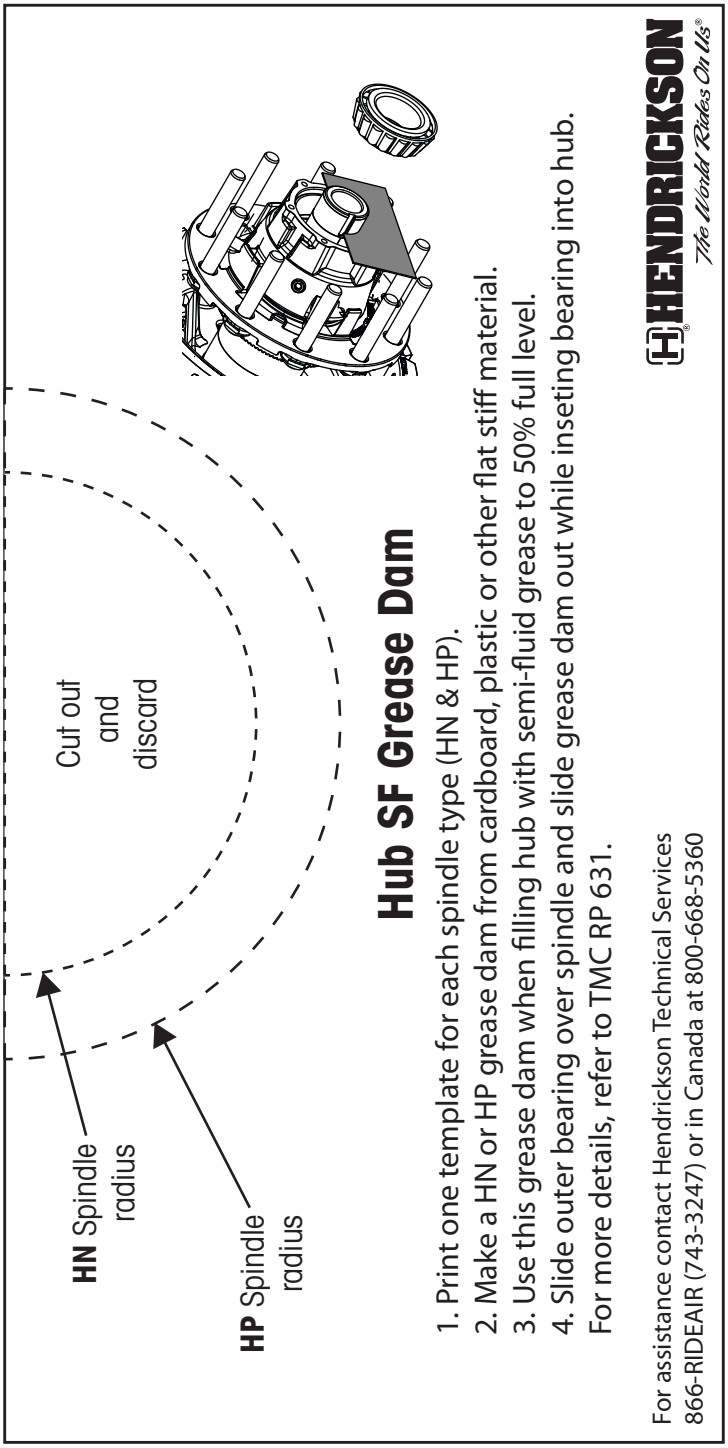

Figure 13: Hub SF Grease Dam template

*Call Hendrickson at **866.RIDEAIR (743.3247)** for additional information.*

www.hendrickson-intl.com

TRAILER COMMERCIAL VEHICLE SYSTEMS
2070 Industrial Place SE
Canton, OH 44707-2641 USA
866.RIDEAIR (743.3247)
330.489.0045 • Fax 800.696.4416

Hendrickson Canada
250 Chrysler Drive, Unit #3
Brampton, ON Canada L6S 6B6
800.668.5360
905.789.1030 • Fax 905.789.1033

Hendrickson Mexicana
Circuito El Marqués Sur #29
Parque Industrial El Marqués
Pob. El Colorado, Municipio El Marqués,
Querétaro, México C.P. 76246
+52 (442) 296.3600 • Fax +52 (442) 296.3601

T72004 Rev B 03-18 ECN 30200 Rev A 03-13 ECN 21573 07-12 ECN 21352

Information contained in this literature was accurate at the time of publication. Product changes may have been made after the copyright date that are not reflected. © 2018 Hendrickson USA, L.L.C. All Rights Reserved Printed in United States of America