LIFTABLE SUSPENSION GUIDE

TRAILER COMMERCIAL VEHICLE SYSTEMS

LIT NO: L801
DATE: January 2018 **REVISION:** D

TABLE OF CONTENTS

INTRODUCTION 2
GENERAL GUIDELINES FOR LIFTABLE APPLICATIONS 2
TERMINOLOGY 3
VEHICLE DESIGN 4
LIFT MECHANISMS 6
SUSPENSION LIFT RECOMMENDATIONS / SPECIFICATIONS 8
LIFT CONTROLS 13
UBL™ TROUBLESHOOTING 14

HENDRICKSON
The World Rides On Us®

INTRODUCTION

Hendrickson presents this publication to help aid in understanding Hendrickson's lift systems. Hendrickson offers an array of lift systems for various applications.

PURPOSE

This guide provides the tools and guidelines to select the correct liftable suspension to meet specific requirements for your application. This guide includes an explanation of the terms needed to properly discuss application and product information about suspensions, lift mechanisms and lift controls.

QUESTIONS

While this publication has attempted to answer the majority of questions that normally arise in this process, there are always situations that cannot be anticipated. In the event that additional questions arise that are not addressed in this publication, please contact Hendrickson Customer Service, Technical Service or Applications Engineering team.

HENDRICKSON TRAILER COMMERCIAL VEHICLE SYSTEMS:

Telephone:
(United States) 866-743-3247 (866-RIDEAIR)
(Canada) 800-668-5360

Website: www.Hendrickson-intl.com

CHANGES TO GUIDELINES

These guidelines are subject to change at any time without prior notice at the discretion of Hendrickson. To get the most up-to-date version of these guidelines visit www.hendrickson-intl.com.

OTHER LITERATURE

LIT. #	DESCRIPTION
L727	UBL™ UNDER BEAM LIFT™ Flyer
L757	UBL UNDER BEAM LIFT Parts List
L719	UBL Installation Procedures
T91001	UBL Information & Requirements

GENERAL GUIDELINES FOR LIFTABLE APPLICATIONS

- INTRAAX® AAL and AANL suspension systems are specifically designed for lifting. These liftable suspension models have additional up travel to bumper contact which maximizes lifted tire clearance. Top-mount suspension models may not meet these clearance expectations and a liftable suspension should be considered instead. Review the anticipated ground clearance under the tires to help make this decision.
- For load equalization, liftable and non-liftable suspensions must be of the same product series and capacity (e.g. AAT 23K with AAL 23K).
- Government regulations regarding lifting suspensions vary by jurisdiction. Review all regulations or contact authorities for specific legal requirements.

TERMINOLOGY

RIDE HEIGHT
The distance between the suspension mounting surface and the center of the axle.

DESIGNED RIDE HEIGHT
The ride height at which the suspension was originally spec'd as when purchased.

BUMPER CONTACT
The distance the suspension moves upward from the designed ride height until the internal air spring bumper is contacted. This is also the distance the suspension will lift.

SUSPENSION LIFT
The distance the suspension can be lifted from designed ride height. This distance is the same as the bumper contact distance. *The amount of suspension lift will change if the ride height is changed.*

JOUNCE
The maximum distance the suspension can move upward from the designed ride height. This distance includes the compression of the air spring bumper and the pivot bushing, and it is always more than the suspension lift distance.

REBOUND
The maximum distance the suspension will move downward from the designed ride height.

SUSPENSION TRAVEL
The total amount the suspension can move up or down. Travel is equals to jounce plus rebound.

LIFTED TIRE CLEARANCE
The distance between the tire and the ground when the axle is lifted. This distance is always less than the suspension lift distance due to the deflection of the tire under load.

LOADED TIRE RADIUS
The distance between the center of the axle and the ground when the tire is loaded. The tire will deflect when loaded, making the loaded tire radius smaller than the unloaded tire radius. The difference between the loaded and unloaded tire radius contributes to the difference between suspension lift and the lifted tire clearance.

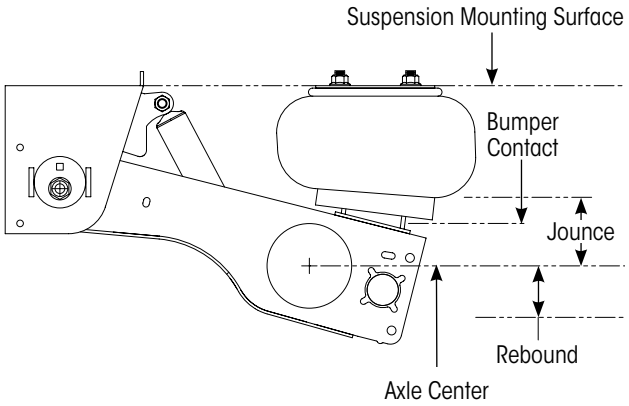

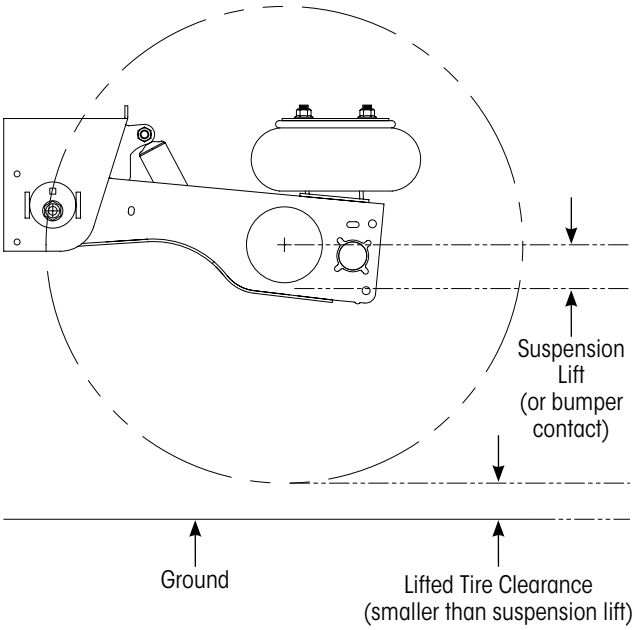

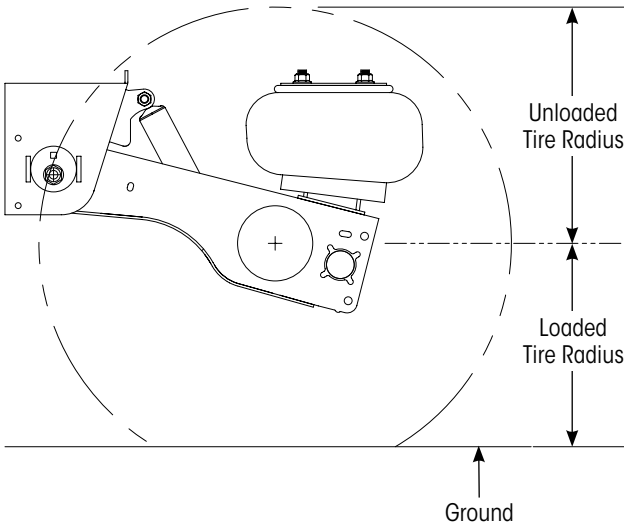

VEHICLE DESIGN

Variations in the vehicle design can affect the operation of a liftable suspension by impacting the suspension's operating ride height. The vehicle design thus affects the suspension lift because the amount of suspension lift directly correlates to the ride height.

FRAME-TO-GROUND

The height of the vehicle from the ground to the bottom of the frame (i.e. the suspension mounting surface) is used to determine the desired suspension ride height. The frame height at the intended location of the suspension on the vehicle frame must be used. This distance can vary as a result of the factors illustrated below.

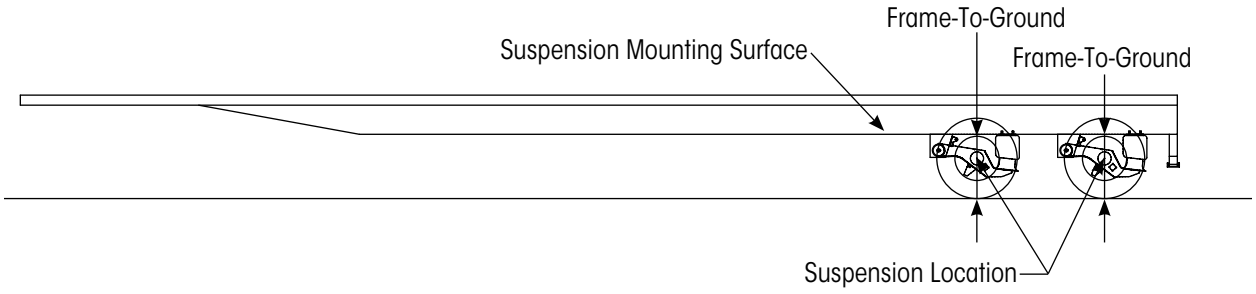

FIFTH WHEEL HEIGHT

Variations in the fifth wheel height can change the frame-to-ground height of the trailer frame and impact the suspension ride height. Variations can occur if a tractor with a different fifth wheel height is used as illustrated below.

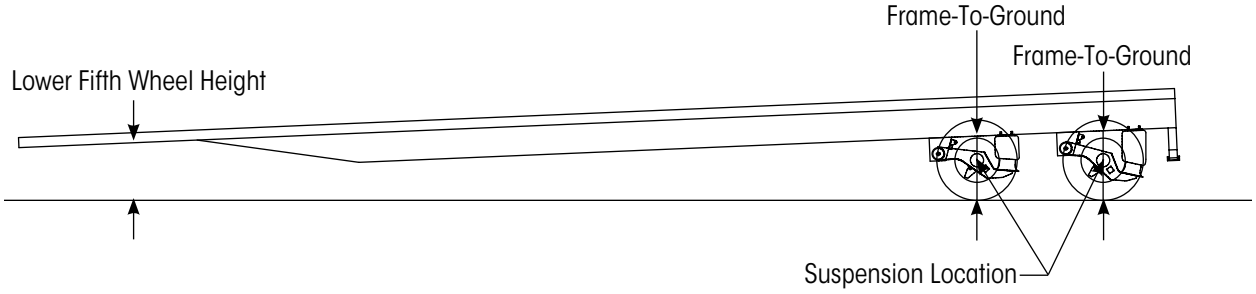

FRAME DEFLECTION

Many vehicle frames are designed to deflect under load. As the frame deflects, the frame-to-ground distance will be affected, which can change the suspension's ride height. Refer to illustration below.

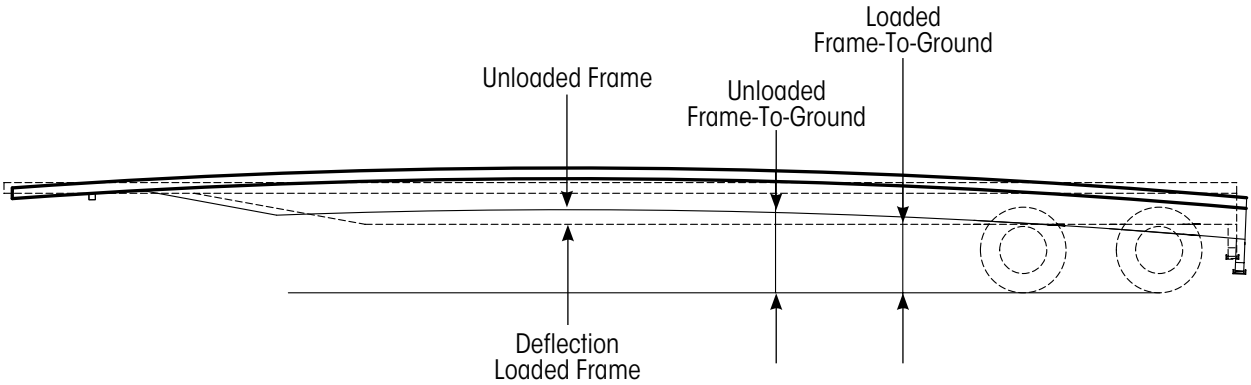

VEHICLE DESIGN (Continued)

TIRE CLEARANCE

Calculate the anticipated axle to ground clearance under the tires using this formula:

Bumper Contact – Tire Deflection – Trailer Deflection

When lifting a suspension, never exceed the capacity of the non-lifted suspension and always check to make sure sufficient clearance is above the tire. Refer to the Hendrickson suspension installation drawing for bumper contact dimensions and the tire manufacturer's manual for tire deflection.

REDUCING TIRE SIZES

Reducing the tire size on an existing suspension is sometimes suggested as a way to increase the amount of lifted tire clearance on a liftable suspension installation. The amount of lift available is controlled by the suspension, which means that the liftable suspension will always raise the axle to the same distance below the frame. As a result, the lifted tire clearance would be increased by the reduction in the tire radius.

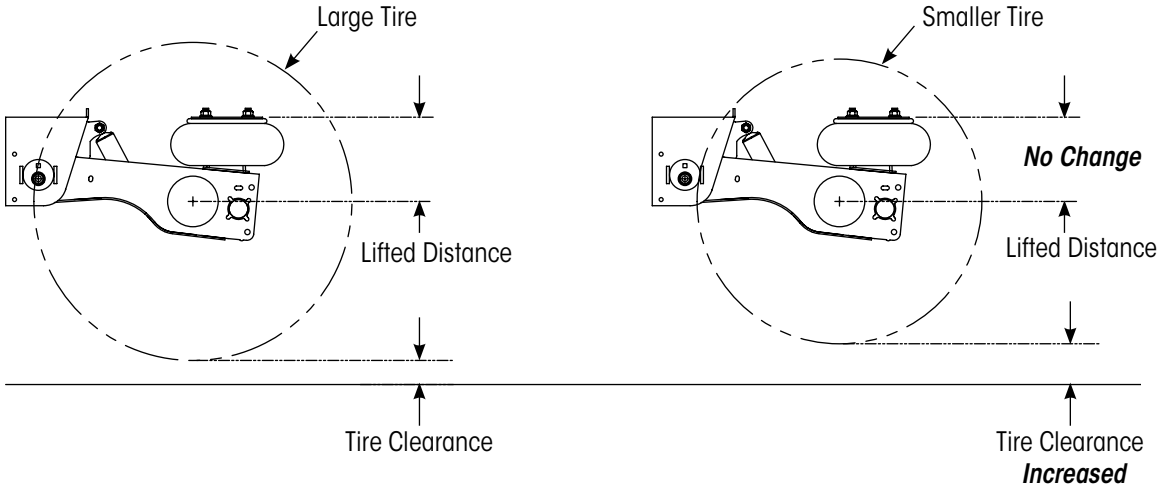

Reducing the tire size will also increase the suspension ride height when the axle is lowered. Exceeding the maximum allowed ride height could result in a loss of suspension capacity and damage to the suspension components. The maximum allowable suspension ride height should never be exceeded. Refer to L388 Recommended Ride Height Settings to determine the maximum ride height.

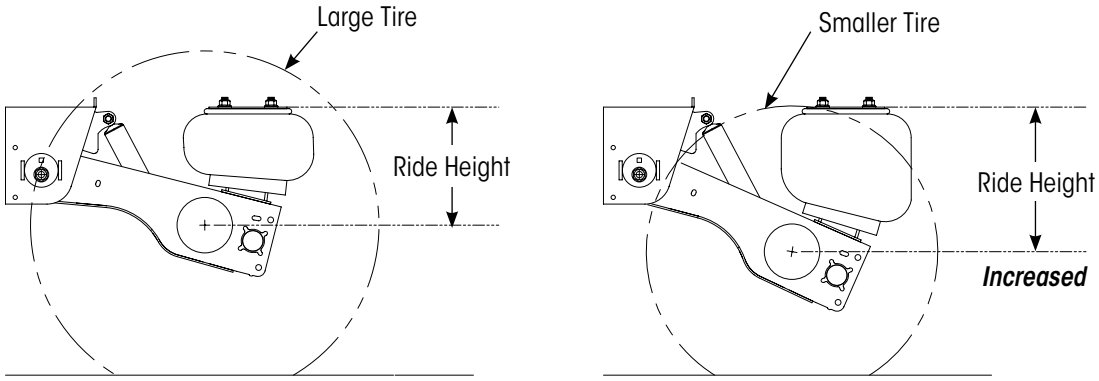

LIFT MECHANISMS

Unlike lift mechanisms supplied by Hendrickson's Auxiliary Axle division, which are provided as part of the suspension assembly itself, lift mechanisms supplied by Hendrickson's Trailer division are sold separately from the suspension system. Various lift types are available depending on the suspension model (see below).

PREFERRED SYSTEMS OR SOLUTIONS

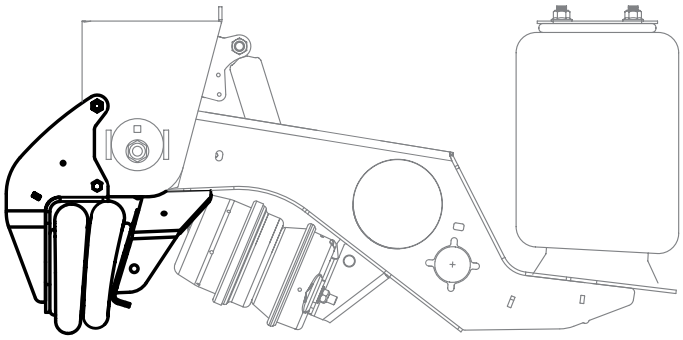

UBL™ UNDER BEAM LIFT™ (INTRAAX® & HT™ SERIES)

Uses two lift air springs per suspension that are mounted under each frame bracket

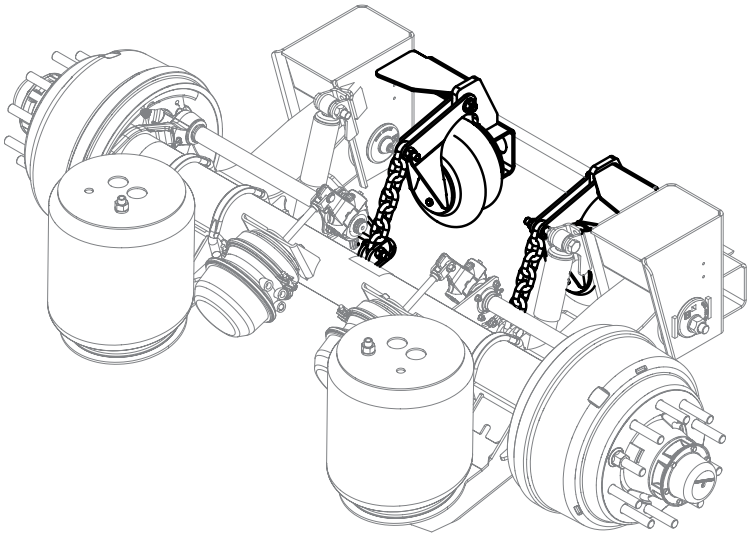

SBL™ SIDE BEAM LIFT™ (HT SERIES)

Uses two lift air springs per suspension that are mounted to the inside of the frame brackets.

OTHER SYSTEMS OR SOLUTIONS

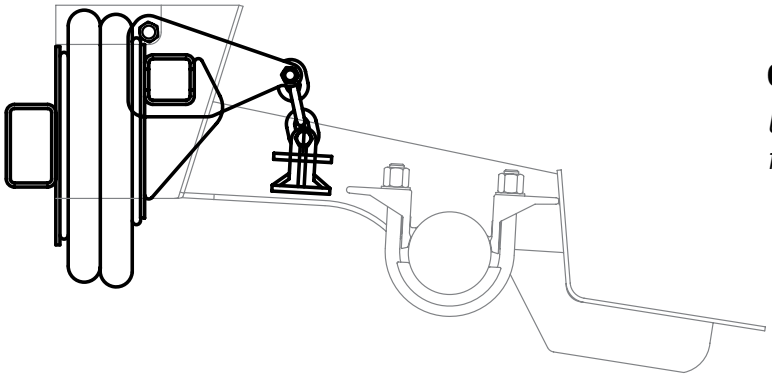

CL CENTER LIFT (HT SERIES)

Uses a single air spring per suspension that is mounted between the frame brackets.

LIFT MECHANISMS

OTHER SYSTEMS OR SOLUTIONS (Continued)

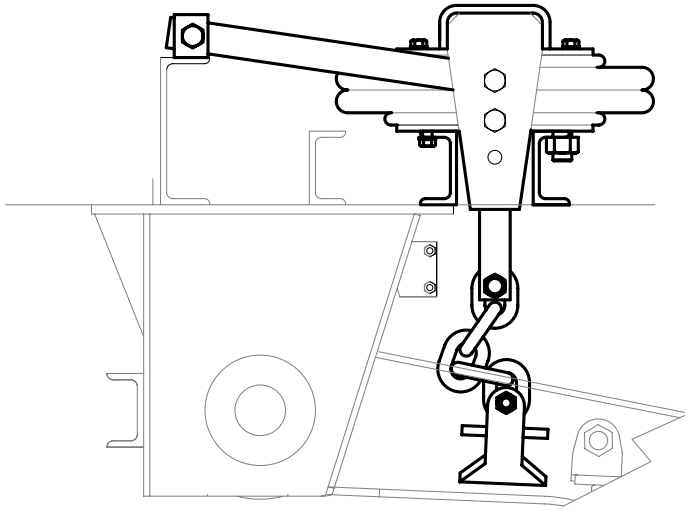

VCL CENTER LIFT (HT™ SERIES)

Uses a single air spring per suspension that are mounted in the center of the trailer frame.

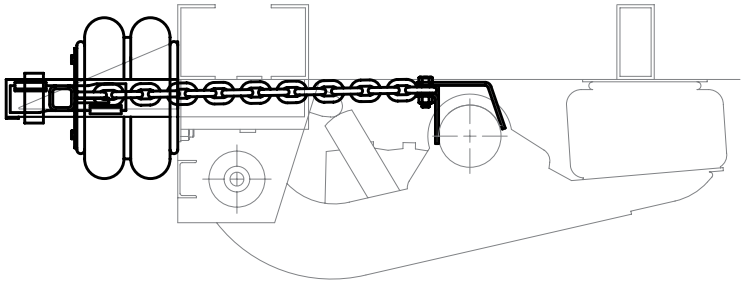

HTCL CENTER LIFT™ (HT SERIES)

Uses a single air spring per suspension with a mechanism that is mounted between the frame brackets.

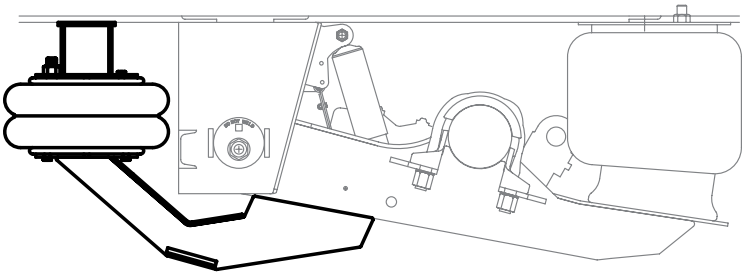

HTBL BEAM LIFT (HT SERIES)

Uses two air springs that are mounted to the suspension beam and the trailer frame at the frame brackets.

ADDITIONAL LIFT MECHANISM NOTES

- CL and HTCL lift kits are not available for winged QUIK-ALIGN® frame brackets.
- VCL lift kits can be modified to work with winged QUIK-ALIGN frame brackets.
- Some HTCL, HTBL and UBL lift kits require a minimum axle-to-axle suspension spacing.

SUSPENSION LIFT RECOMMENDATIONS / SPECIFICATIONS

Due to lifted tire clearance concerns, Hendrickson recommends the following for its liftable suspensions:

Lift axles on loaded trailers with air suspensions
4.2" minimum axle lift

Lift axles *ONLY* on empty trailers with air suspensions
3.0" minimum axle lift

The trailer manufacturer is responsible for reviewing the needs of each application to identify the required lifted tire clearances.

For specific model series, Hendrickson's recommendations are as follows:

INTRAAX® INTEGRATED SUSPENSION SYSTEMS

For low-ride and top-mount INTRAAX models, please refer to the chart below for recommended ride heights that are considered liftable.

LIFTABLE SPECIFICATIONS for INTRAAX SUSPENSIONS

KIT TYPE	CATEGORY[1]	MODEL	RIDE HEIGHT (inches)	
			Liftable When Empty	Liftable When Loaded
UBL™	INTRAAX Top-mount	AANT 23K	14 or greater	Not Recommended
		AAT 23K	14 or greater	Not Recommended
		AAT 25K	15 or greater	Not Recommended
		AAT 30K	15 or greater	Not Recommended
		AAEDT 30K	16 or greater	Not Recommended
	INTRAAX Low-ride or liftable	AANLS 20K	Not Recommended	Not Recommended
		AANL 23K	8 or greater	9 or greater
		AAL 23K	8 or greater	9 or greater
		AAL 25K	8 or greater	9 or greater
		AAL 30K	9 or greater	12 or greater
		AAEDL 30K	9 or greater	9 or greater

1. Standard Travel only. High Control and Limited Jounce suspensions should not be considered Liftable.

Note: Please contact Hendrickson or refer to ***L727 UBL Flyer*** for specific suspension lift kit part numbers.

Refer to the Hendrickson suspension installation drawing for bumper contact or suspension travel.

CONNEX™ UNITIZED SUSPENSION SYSTEMS

For underslung CONNEX models, we do not recommended any ride heights to be considered liftable.

CONNEX™-ST TRAILER SELF-STEER SUSPENSION SYSTEM

For CONNEX-ST models, please refer to the chart below for recommended ride heights that are considered liftable.

LIFTABLE SPECIFICATIONS for CONNEX-ST SUSPENSIONS				
KIT TYPE	CATEGORY	MODEL	RIDE HEIGHT (inches)	
			Liftable When Empty	Liftable When Loaded
UBL™	CONNEX-ST Liftable	CXSL 25K	13 or greater	13 or greater

HT™ SERIES – TOP MOUNT SUSPENSION MODELS

Hendrickson offers both liftable and non-liftable HT™ SERIES top-mount suspension models with 23,000-, 25,000- and 30,000-lb. capacities. Please refer to the tables shown below for specific model recommendations and application limitations for HT SERIES top-mount suspensions.

LIFT KIT TYPE FOR HT SERIES TOP-MOUNT SUSPENSIONS		
MODEL	KIT TYPE	BEAM CENTERS (inches)
HT230T	UBL™	Any
	CL	35 and 41
	HTCL	35 min.
HT250T	UBL	Any
	CL	31 – 41
	VCL	35 and 41
HT300T	UBL	Any
	CL	35 and 41
	VCL	35 and 41

LIFTABLE SPECIFICATIONS FOR HT SERIES TOP-MOUNT SUSPENSIONS			
CATEGORY[2]	MODEL	RIDE HEIGHT (inches)	
		Liftable Only When Empty	Liftable When Loaded
HT SERIES Top-Mount	HT230T[3]	15, 17	Not Recommended
	HT250T	12	14 or greater
	HT300T[1]	17, 19	Not Recommended

2. Standard Travel only. High Control and Limited Jounce suspensions should not be considered Liftable.

3. Only recommended on -003 models.

Note: Please contact Hendrickson for specific suspension lift kit numbers.

HT™ SERIES – UNDERSLUNG SUSPENSION MODELS

Hendrickson offers both liftable and non-liftable models for HT SERIES underslung suspension models with 25,000- and 30,000-lb. capacities. Please refer to the tables shown below for specific model recommendations and application limitations for HT SERIES underslung suspensions.

LIFT KIT TYPE FOR HT SERIES UNDERSLUNG SUSPENSIONS		
MODEL	KIT TYPE	BEAM CENTERS (inches)
HT250US	SBL™ [4]	33.25 min.
	CL [4]	35 – 44
	HTCL	35 min.
	HTBL	Any
HT250U	CL [4]	38 and 41
	HTCL	35 min.
	HTBL	Any
HT300US	CL[5]	35 – 44
	HTCL	35 min.
	HTBL	Any
HT300U	CL[5]	35 and 41
	HTCL	35 min.
	HTBL	Any

4. Axle with s-cams forward only.
5. Axle with remote shock mount only.

GENERAL LIFTABLE CRITERIA FOR HT SERIES UNDERSLUNG SUSPENSIONS			
CATEGORY[6]	MODEL	RIDE HEIGHT (inches)	
		Liftable When Empty	Liftable When Loaded
HT SERIES Underslung	HT250US	9, 12, 14	9, 12, 14
	HT250U	9, 12, 14	9, 12, 14
	HT300US	9, 12, 14, 17	9, 12, 14, 17
	HT300U	9, 12, 14, 17	9, 12, 14, 17

6. Standard Travel only. High Control and Limited Jounce suspensions should not be considered Liftable.

Note: Please contact Hendrickson for specific suspension lift kit numbers.

VANTRAAX® INTEGRATED SLIDER SUSPENSION SYSTEMS

OPTION 1 - HENDRICKSON-INSTALLED UBL BRACKETS

For this option, Hendrickson installs the UBL™ UNDER BEAM LIFT™ axle lift brackets onto a VANTRAAX® slider system. This VANTRAAX system includes shorter air springs and taller air spring pedestals on the front suspension. This combination of components on the front axle increases the front suspension's up travel, which provides an increase in the clearance under the tire when the axle is lifted. The rear suspension's travel remains the same.

SPECIFICATION GUIDELINES:

- Not available with ZMD® ZERO MAINTENANCE DAMPING® technology
- Front axle only may be lifted

LIFTABLE SPECIFICATIONS FOR LIFTABLE VANTRAAX SUSPENSIONS				
KIT TYPE	CATEGORY	MODEL	RIDE HEIGHT	
			Liftable When Empty	Liftable When Loaded
UBL	VANTRAAX Top-Mount	HKANT 40K HD	16.0" and 17.5"	17.5"
		HKANT 46K	16.0" and 17.5"	17.5"
		HKANT 69K23	16.0" and 17.5"	17.5"

SUSPENSION LIFT	MAX. TIRE DIAMETER	RIDE HEIGHT	LIFTED GROUND CLEARANCE
Standard	40.2"	16"	3.2"
		17.5"	4.7"
Limited	41.3"	16"	2.6"
		17.5"	4.1"

OPTION 2 - OEM-INSTALLED UBL BRACKETS

The UBL lift kit can be installed by the trailer OEM on any VANTRAAX slider model. In order to increase the amount of axle lift, Hendrickson recommends raising the suspension ride height to the published maximum allowable adjustment (see L388 Ride Height Settings). However, the overall trailer height must be considered when increasing the suspension ride height.

SUSPENSION TRAVELS:

Refer to slider installation drawings and L388 Ride Height Settings, which are available on www.hendrickson-intl.com.

LIFTABLE SPECIFICATIONS FOR LIFTABLE VANTRAAX SUSPENSIONS				
KIT TYPE	CATEGORY	MODEL	RIDE HEIGHT	
			Liftable When Empty	Liftable When Loaded
UBL	VANTRAAX Top-Mount	HKANT	16.0" and 17.5"	Not Recommended
		HKAT	13.5" to 19.0"	
	VANTRAAX Low-Ride	HKANL	16.0" to 17.0"	Not Recommended
		HKAL	10.0" and 11.0"	
		HKARL	9.0", 10.0", 11.0" and 12.0"	

OPTION NOTES:

- Hendrickson does not recommend a lift be installed onto the rear axle when SURELOK® is included.
- Raising the ride height to increase lift is not recommended in combination with ZMD® ZERO MAINTENANCE DAMPING® option.

LIFT CONTROLS

Along with the suspension lift mechanism itself, air controls are required for raising and lowering the suspension. These controls are generally grouped as follows:

INDEPENDENT SUSPENSION LIFT CONTROLS

Independent suspension lift controls are used when the liftable suspension is being operated under load independent of the other vehicle suspensions. The controls include an air pressure regulator that is used to determine the load the suspension will carry when it is lowered.

This type of control is used when a liftable suspension is installed along with spring suspensions. It is also used when the liftable suspension cannot be operated when lowered using the existing vehicle height control valve because the suspension is not designed to carry the same load as the other air suspensions.

PRIMARY SUSPENSION LIFT CONTROLS

Primary suspension lift controls are used when the liftable suspension is being operated under load using the existing vehicle height control valve. These controls assume that they will be installed in conjunction with a height control valve system that will be used to regulate the suspension air pressure when it is lowered.

This type of control is used when the liftable suspension is designed to operate under load at the same pressure as the other vehicle air suspensions. This can occur when the suspension is designed to carry the same load at the same pressure as the other suspensions or when the load difference meets the vehicle requirements.

ADDITIONAL CONTROL OPTIONS

MANUAL LIFT

The lifting of the suspension is controlled using a switch on an air valve that is typically installed on the outside of the vehicle.

ELECTRIC LIFT OR REMOTE LIFT

The lifting of the suspension is controlled using an electric switch that is wired to a solenoid actuated air valve. The electric switch is typically installed in the tractor cab or it may be operated using a transmitter.

AUTOMATIC LIFT

The control allows the suspension to be lifted automatically when the trailer load is reduced to where the additional axle is not required.

REVERSE LIFT

The control will automatically lift the suspension when the vehicle is placed in reverse. Typically used when a self-steering axle is used with the suspension.

AUTOMATIC LOWERING

Automatically lowers the axle after it has been lifted to prevent continuously overloading the non-lifted suspensions.

ENCLOSED

The control is provided within an enclosure to provide additional protection to the control valves. Enclosed controls are easier to mount and install since most of the valves are pre-assembled and plumbed together.

SERVICE BRAKE ISOLATION

Valving is added to automatically disengage the service brakes on the lifted axle when it is lifted. This prevents the lifted tires from attempting to brake without a load should the lifted tires touch the ground.

SUSPENSION DUMP

Allows all of the trailer air suspensions to be fully exhausted for loading or other vehicle operations. Only available with primary suspension lift controls.

Hendrickson Trailer Commercial Vehicle Systems offers both Independent and Primary Suspension Lift Controls. Please refer to L1182 Controls Parts Catalog for specific controls options and air control kit part numbers.

UBL™ TROUBLESHOOTING

If the currently installed UBL lift kit is not providing sufficient clearance under the tires the following options are available:

Option 1: Increase Ride Height

1. Find the Bumper Contact dimension by referring to the suspension installation drawing on Hendrickson's Trailer Literature website: (http://www.hendrickson-intl.com/ProductInfo/Trailer-Product-Info-New)
2. Find the maximum ride height setting allowable for the suspension by referring to L388 Recommended Ride Height Settings.
3. Calculate the new ride height & travel
   Note: *75% of the allowable range is recommended to ensure maximum ride height allowable is not violated.*
   a. (Maximum RH – Designed RH) x 0.75 + Designed RH = New RH
   b. (New RH – Designed RH) + Bumper Contact = New Lift

Example: INTRAAX® AAT 23K suspension with 14″ designed ride height

1. Bumper Contact = 3.0″
   Note: *Due to tire deflection and frame deflection, tire clearance will be less than 3.0″*
2. Maximum Ride Height = 15.75″
3. New RH = (15.75 - 14.0) x 0.75 + 14.0 = 15.3
   New Lift = (15.3 - 14.0) + 3.0 = 4.3″

Conclusion: The new lift is 4.3″ when using a 15.3″ ride height for an AAT 23K suspension.

Option 2: Convert to a low-ride suspension

1. If currently using a top-mount suspension model consider switching to a low-ride suspension, which typically provides more lift.

*Call your trailer dealer or Hendrickson at **330.489.0045** or **866.RIDEAIR (743.3247)** for additional information.*

HENDRICKSON

www.hendrickson-intl.com

TRAILER COMMERCIAL VEHICLE SYSTEMS
2070 Industrial Place SE
Canton, OH 44707-2641 USA
866.RIDEAIR (743.3247)
330.489.0045 • Fax 800.696.4416

Hendrickson Canada
250 Chrysler Drive, Unit #3
Brampton, ON Canada L6S 6B6
800.668.5360
905.789.1030 • Fax 905.789.1033

Hendrickson Mexicana
Circuito El Marqués Sur #29
Parque Industrial El Marqués
Pob. El Colorado, Municipio El Marqués,
Querétaro, México C.P. 76246
+52 (442) 296.3600 • Fax +52 (442) 296.3601

L801 Rev D 01-18

Information contained in this literature was accurate at the time of publication. Product changes may have been made after the copyright date that are not reflected. © 2018 Hendrickson USA, L.L.C. All Rights Reserved

Printed in United States of America