Service Bulletin

File in Section: -
Bulletin No.: 18-NA-098
Date: April, 2018

INFORMATION

Subject: **Diagnostic Tip for Coolant Leak, Coolant Consumption and/or Low Coolant Message Being Displayed On the Driver Information Center (DIC)**

Brand:	Model:	Model Year:		VIN:		Engine:	Transmission:
		from	to	from	to		
Chevrolet	Silverado	2017	2018			Equipped with 6.6L Diesel Engine (RPO L5P)	
GMC	Sierra						

Involved Region or Country	North America and NA Export vehicles
Condition	Some customers may comment on a coolant leak, coolant consumption and/or low coolant message being displayed on the driver information center (DIC).
Correction	Use the illustrations below, that show the areas in blue, to help identify where to look for possible coolant leak paths for the Duramax engine.

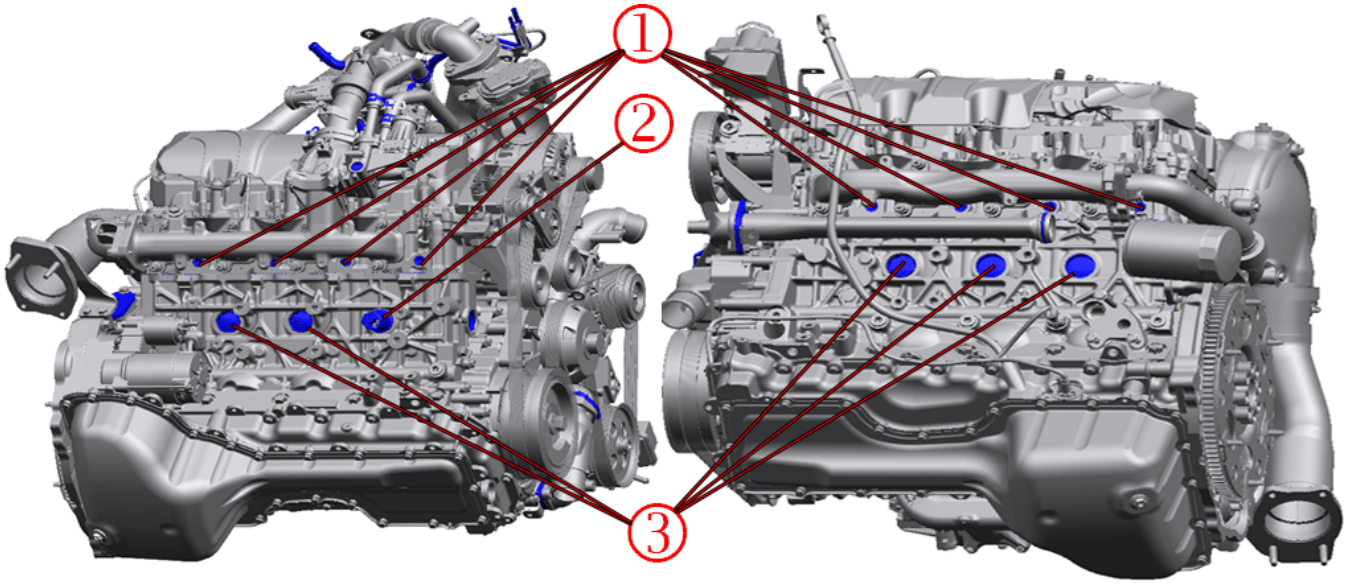

5027608

1. Plugs in Cylinder Head (PLUG, CYL HD CORE HOLE) (Qty 8)
2. Block Heater (HEATER, ENG COOL)
3. Cup Plugs in Block (PLUG, ENG BLK COOL DRN HOLE (OD=40MM) (Qty 5)

Copyright 2018 General Motors LLC. All Rights Reserved.

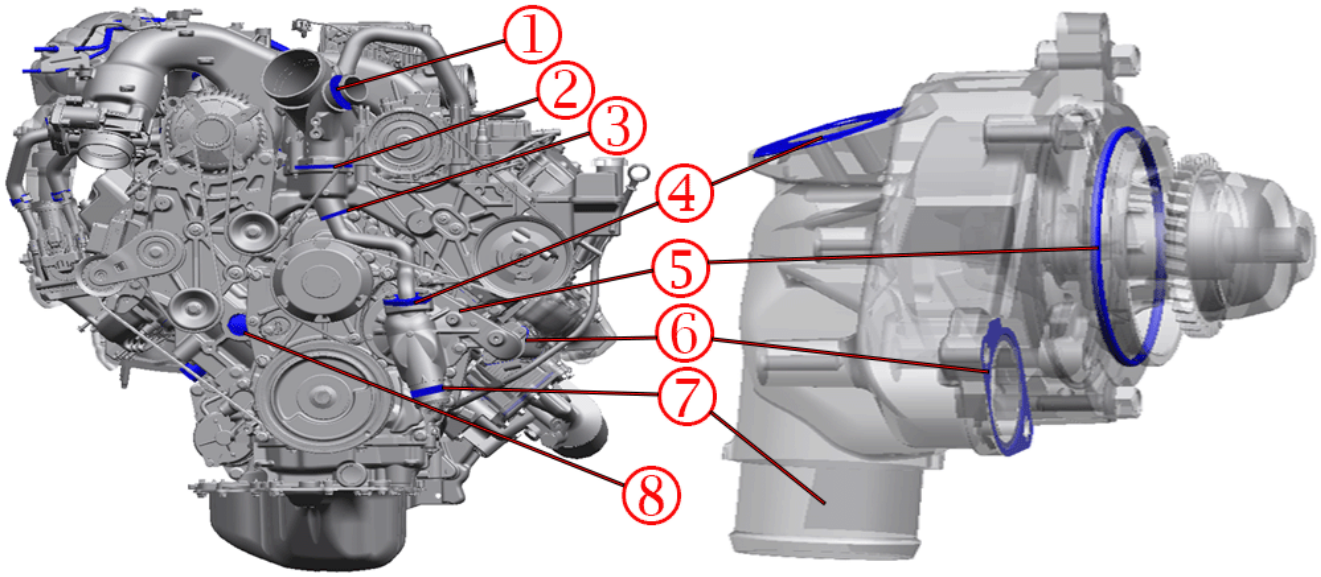

5027641

1. Coolant Hose and Clamp
2. Thermostat Housing (SEAL, ENG COOL THERM (O RING)
3. O-Ring for Bypass Pipe (SEAL, THERM BYPASS PIPE (O RING))
4. Flange with Gasket for Bypass Pipe (GASKET, THERM BYPASS PIPE)
5. O-Ring Seal (Front Cover to Water Pump) (SEAL, W/PMP CVR)
6. Seal-Water Pump to Pipe (GASKET, W/PMP OTLT PIPE)
7. Coolant Hose and Clamp
8. Cup Plug on Block (PLUG, ENG BLK COOL DRN HOLE)

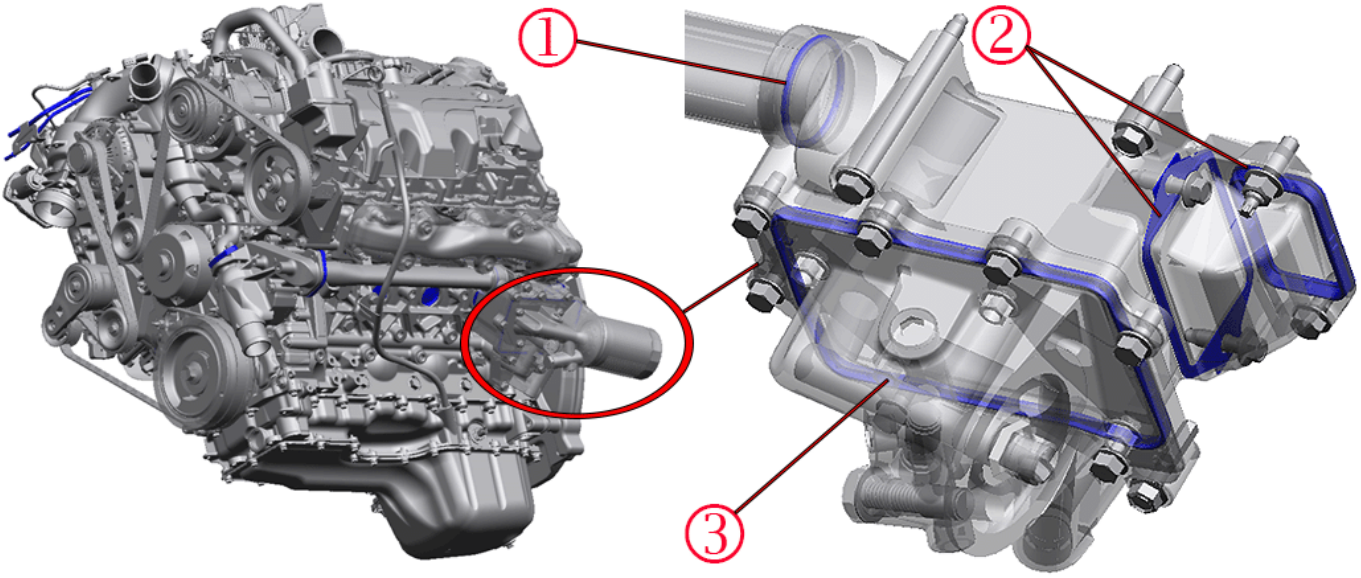

5028324

1. O-Ring (Water Pipe to Oil Cooler) (SEAL, W/PMP OTLT PORT)
2. Either end of the Oil Cooler Adapter (Elbow) (GASKET, ENG OIL CLR ADAP)
3. Seal in the Oil Coolet (GASKET, ENG OIL CLR)

Note: Ghost view of the Oil Cooler to reveal O-ring and cover gasket and 2 adapter gaskets (Oil Filter not shown).

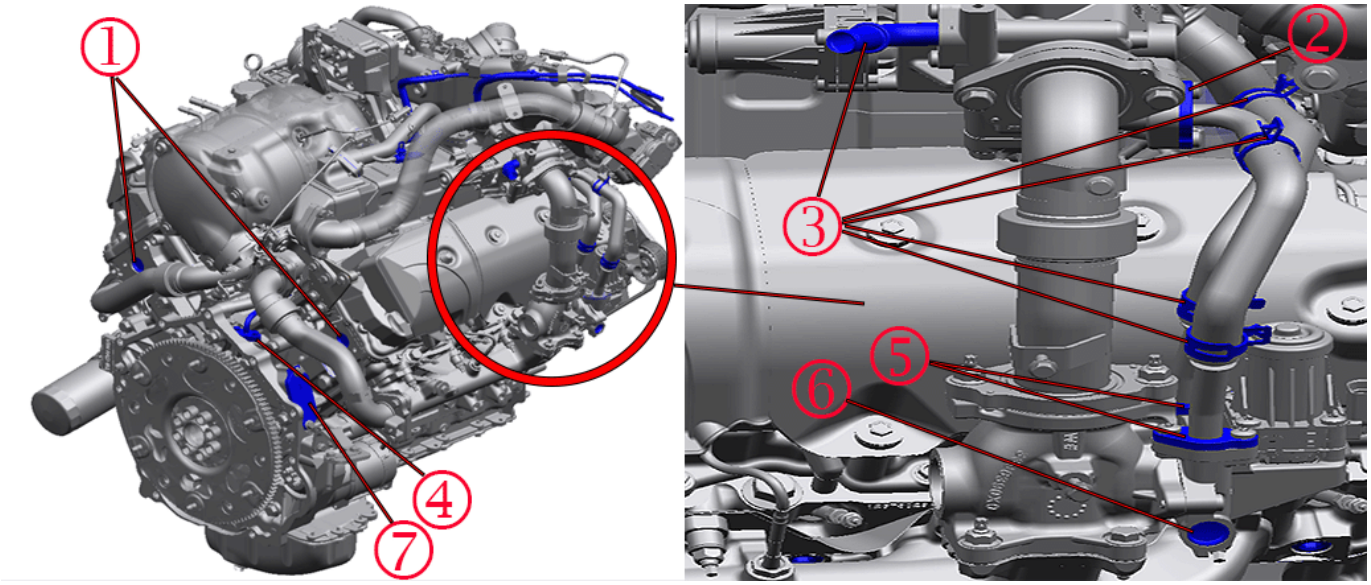

5028590

1. Cup Plugs (Qty 2)(One per side in rear of Cylinder Head) (PLUG, CYL HD CORE HOLE)
2. Gaskets under Flange, 1 location on EGR Bypass Valve (Serviced with VALVE, EGR VLV CLR BYPASS)
3. Hose Clamps, 5 locations
4. Turbo Coolant Feed Pipe (GASKET, TURBO COOL FEED & RTN PIPE)
5. Gaskets under Flange, 2 locations on EGR Valve (Service with VALVE, EGR)
6. Cup Plug in Bypass Valve (Service with VALVE, EGR)
7. Cover on Flywheel Housing (GASKET, FLYWHL HSG CVR)

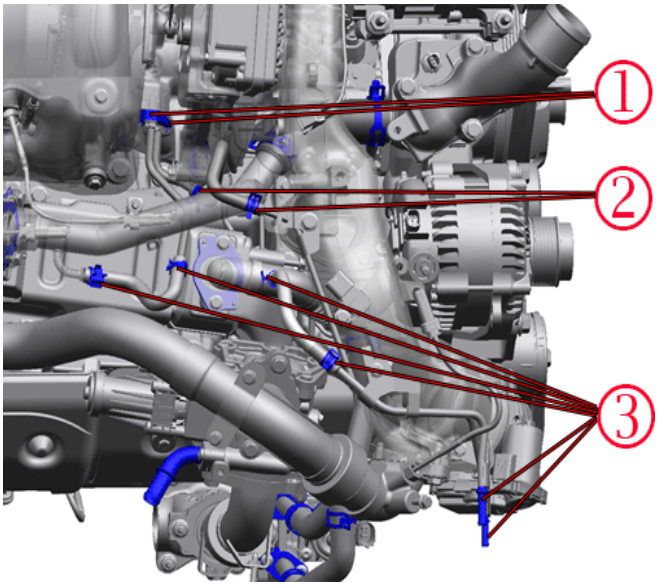

5028593

1. Gasket for Turbo coolant pipes (GASKET, TURBO COOL FEED & RTN PIPE) (Qty 2)
2. Ghost view of Upper Intake Manifold and ERG Coolant Pipe. Inlet Adapter removed to reveal EGR Coolant Return Pipe.
3. Hose Clamps for Turbo Coolant Pipes and DEF Coolant Pipe (Qty6)

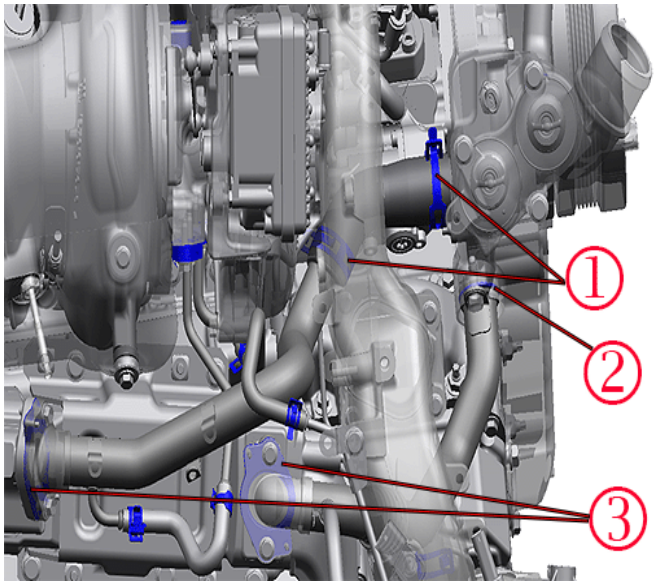

5028604

Note: A leak on the top of the engine will trail down the back of the engine and appear as a rear cover leak.

1. Hose Clamps on the EGR Coolant Return Hose (Qty 2)
2. O-Ring for EGR Coolant Return Pipe (SEAL, EGR COOL FEED PIPE) (Qty 2)
3. Gaskets under Flanges for EGR Coolant Feed and Return Pipes (SEAL, EGR COOL FEED PIPE) (Qty 2)

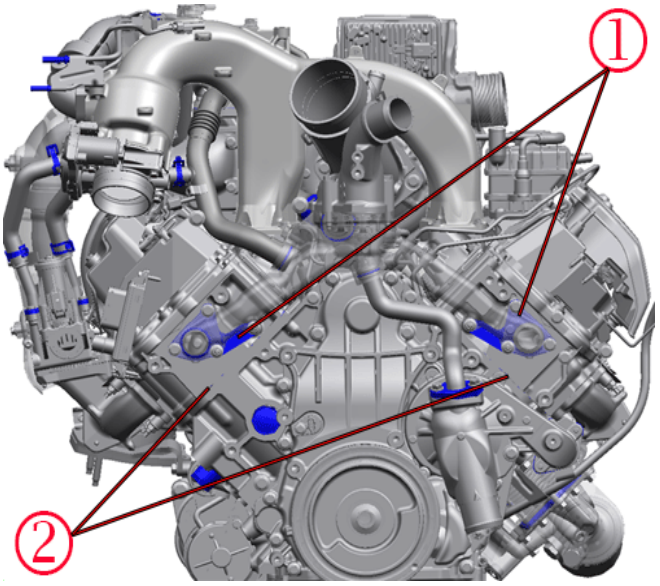

5028676

1. Gaskets between Cylinder, Heads and Water Crossover Housing (GASKET, ENG COOL THERM HSG) (Qty 2)
2. Head Gaskets (GASKET, CYL HD)

Version	1
Modified	Released April 05, 2018

GM bulletins are intended for use by professional technicians, NOT a "do-it-yourselfer". They are written to inform these technicians of conditions that may occur on some vehicles, or to provide information that could assist in the proper service of a vehicle. Properly trained technicians have the equipment, tools, safety instructions, and know-how to do a job properly and safely. If a condition is described, DO NOT assume that the bulletin applies to your vehicle, or that your vehicle will have that condition. See your GM dealer for information on whether your vehicle may benefit from the information.

WE SUPPORT VOLUNTARY TECHNICIAN CERTIFICATION