NOVA BUS

INFORMATION LETTER LI4167ER1

REFERENCE:	Nova Bus Manuals
SECTION:	12: Interior Furnishing
RS Nº:	MQR 7621-1007
EFFECTIVE IN PROD.:	N/A

APPLICATION DEADLINE: N/A

SUBJECT:	Articulation stanchion
JUSTIFICATION:	New improved stanchion is now available for installation in the articulation section of the vehicle.

LEVEL	DESCRIPTION	DIRECT CHARGES		TIME
		LABOUR	MATERIAL	
1	Installation of new stanchion	Client	Client	–
2	–	–	–	–

MATERIAL

QTY	PART Nº	REV.	DESCRIPTION	REPLACES PART N°
LEVEL 1				
1*	N90327-25	–	STANCHION ARTIC ASSY SS YELLOW	N48035-01
4*	N11169	–	BOLT M8X20 YP GR8.8 DIN933	–
4*	N21101	–	WASHER M8 OVERSIZE YP DIN9021	–
2*	N40770	–	BLOCK TENON M8	–
LEVEL 2				
–	–	–	–	–

*** The material of this LI is to replace a single stanchion. If you are replacing the stanchions on both sides, please order this LI twice per vehicle**.

To order, please contact Prevost Parts by phone at 1-800-771-6682, by fax at 1-888-668-2555 or by email at prevostparts.commandes@volvo.com. Specify document number, quantity of parts required and shipping address.

DISPOSAL OF PARTS

REMOVED PARTS ARE:	DISCARDED *	RETAINED	* Dispose of the unused parts and the defective parts in accordance with local environmental standards in effect.
	Yes	–	

REVISION HISTORY

REV.	DATE	CHANGE DESCRIPTION	WRITTEN BY
NR	2018JA30	Initial release	Kumaraswamy K S
R1	2018MR29	Page 1: Quantity of material adjusted to replace one side at a time. Note added for the customer to specify if he wants to order 1 or 2 stanchions.	André Pelletier

APPROVED BY: Daniel Theriault

Digitally signed by Daniel Theriault
DN: cn=Daniel Theriault, o=Nova Bus, ou, email=daniel.theriault@volvo.com, c=CA
Date: 2018.03.29 17:17:08 -04'00'

CLIENT	ORDER	ROAD NUMBER		VIN (2NVY/4RKY...)		QTY
		FROM	TO	FROM	TO	
Austin - CMTA - Texas	L636	5002	5022	S92U1D4500306	S92U0D4500328	21
Austin - CMTA - Texas	LA17	5101	5107	S92J2H9775763	S92J3H9775769	7
CT Transit - Connecticut	L554	1041	1065	S92U1A4000139	S92U0A4000164	25
CT Transit - Connecticut	L571	1101	1110	S92YXB4000144	S92Y4B4000169	10
CT Transit - Connecticut	L815	1426	1429	S92L0E4500709	S92L0E4500712	4
Démo US	L724	7300	7301	S92Y1D4500275	S92Y3D4500276	2
Duke University - North Carolina	L651	—	—	S92Y1B4000145	S92Y3B4000146	2
Duke University - North Carolina	LA39	—	—	S92LXH9775995	S92LXH9775995	1
LYNX - Florida	L725	—	—	S92Y9D4500329	S92Y5D4500330	2
LYNX - Florida	L764	—	—	S92Y7D4500331	S92Y9D4500332	2
LYNX - Florida	L785	—	—	S92L6E4500505	S92L8E4500506	2
MTD - Santa Barbara, California	L730	—	—	S92J8E4500567	S92J1E4500569	3
New York City Transit - New York	L536	1200	1201	S92U793000490	S92U993000491	2
New York City Transit - New York	L545	1202	1289	S92U5A4000001	S92U0A4000098	88
Saskatoon - Saskatchewan	L551	1005	1007	S92UXA3000178	S92U8A3000180	3
SEPTA - Pennsylvania	L741	7355	7355	S92L4E4500504	S92L4E4500504	1
SEPTA - Pennsylvania	L742	7371	7414	S92L6E4500729	S92L7E4500772	44
SEPTA - Pennsylvania	L743	7356	7370	S92L1E4500489	S92L2E4500503	15
SEPTA - Pennsylvania	L745	7415	7415	S92L0F4500873	S92L0F4500873	1
SEPTA - Pennsylvania	L746	7416	7454	S92L7F4500952	S92L8F4501012	39
SEPTA - Pennsylvania	L749	7302	7354	S92Y7D4500409	S92L2E4500470	53
SEPTA - Pennsylvania	L861	7300	7484	S92L5G9775188	S92L8G9775220	32
St. John - New Brunswick	L272	—	—	S92U483000011	S92U483000011	1
St. John - New Brunswick	L273	—	—	S92U383000050	S92U383000050	1
University of Colorado - Colorado	L627	—	—	S92UXB4000139	S92U6B4000140	2
Walt Disney World - Florida	L763	—	—	S92U0D3001019	S92U4D3001024	6

WARNING

Follow your internal safety procedures.

PROCEDURE

1.1. Park the vehicle on an even surface with transmission in neutral (N).

1.2. Set the Master control switch in the STOP position (see Figure 1).

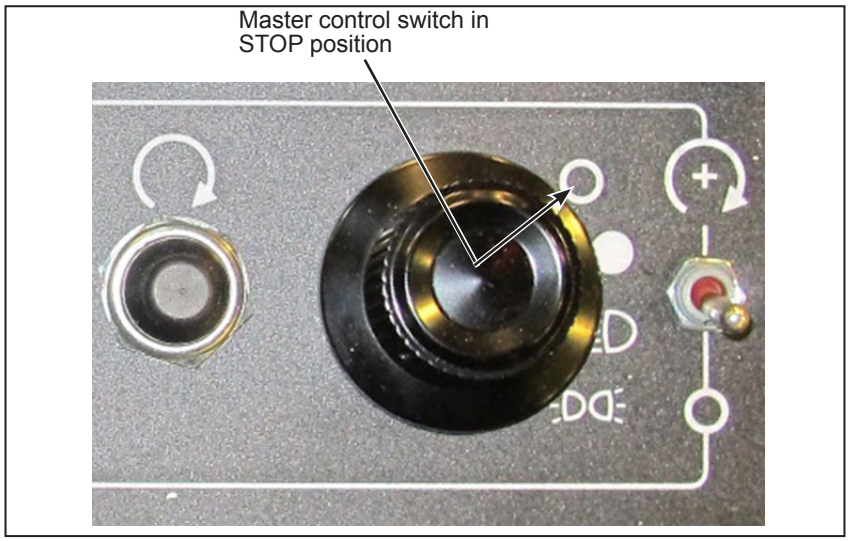

Figure 1 - Master Control Switch in STOP Position

1.3. Locate the articulation area inside the vehicle (see Figure 2).

Figure 2 - Typical View of Articulation System Inside the Vehicle

1.4. Remove the existing stanchion fixed to the center hoop of the articulation. Discard the stanchion, bolts and washers (see Figure 3).

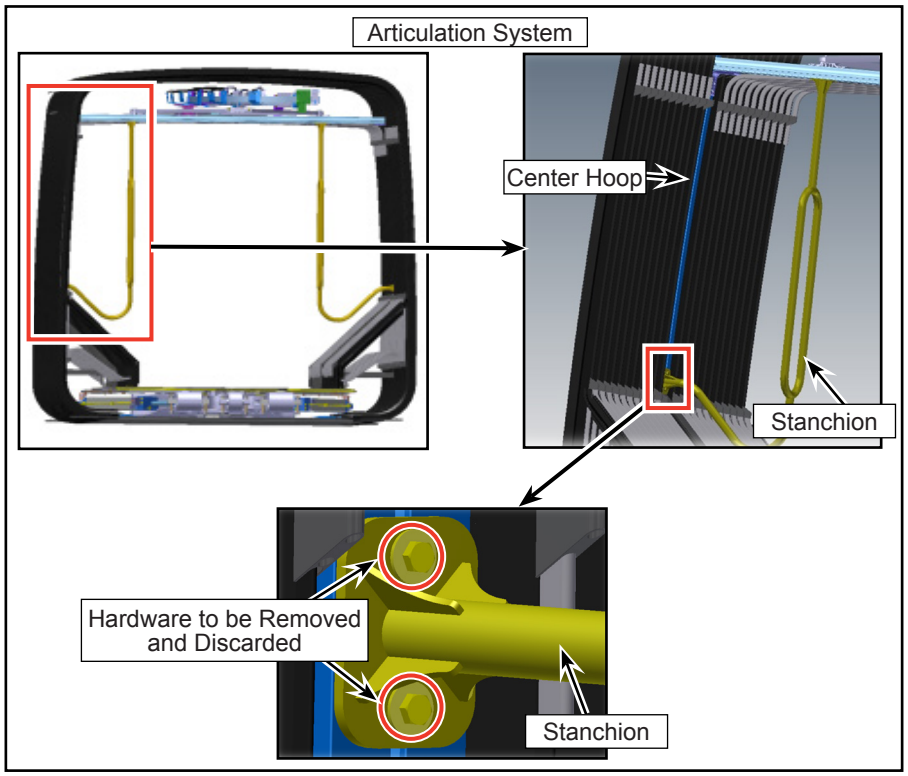

Figure 3 - Removal of Stanchion

1.5. Retain the tenon blocks at the same location (inside the center hoop aluminium profile) as shown (see Figure 4).

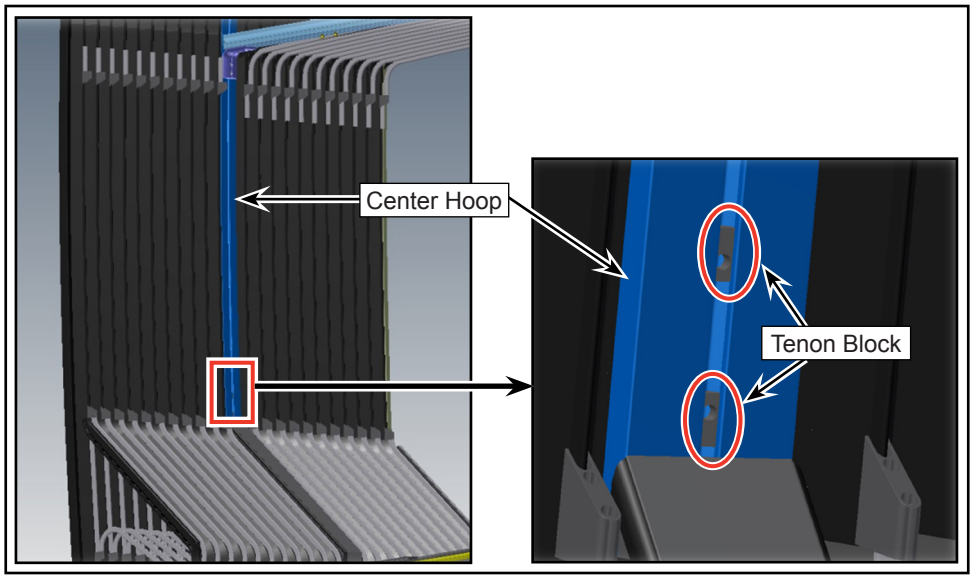

Figure 4 - Typical View of Tenon Block

1.6. Install the new tenon block into the center hoop profile (right below the horizontal guiding profile) with a flat screw driver as shown (see Figure 5).

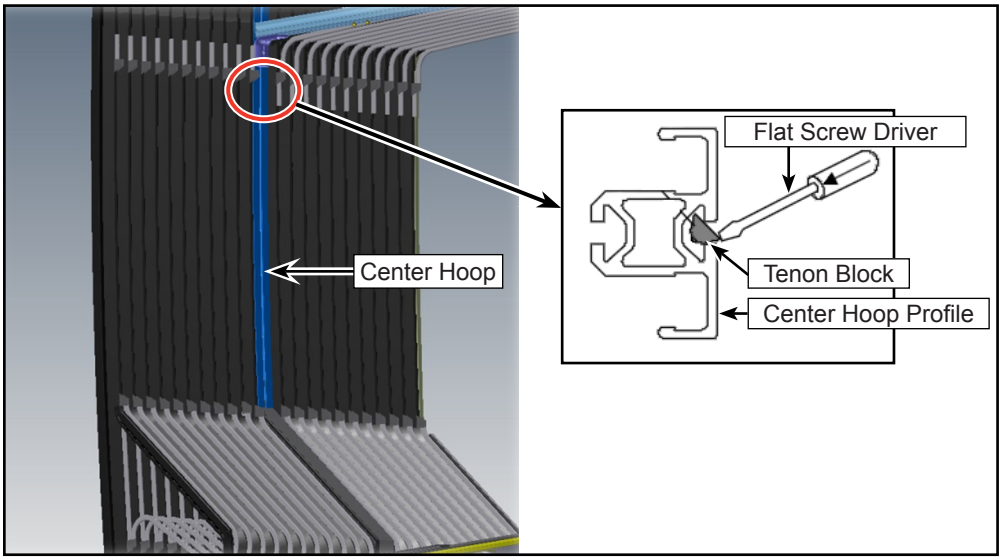

Figure 5 - Installation of Tenon Block

1.7. Install the new stanchion on to the tenon block present inside the center hoop profile with the hardware provided (see Figure 6).

1.8. Ensure that enough gap (Min. 25 mm) is left between the lower edge of the stanchion and the floor cover profile as shown (see Figure 6).

1.9. Apply blue thread locker and torque the bolts as specified (see Figure 6).

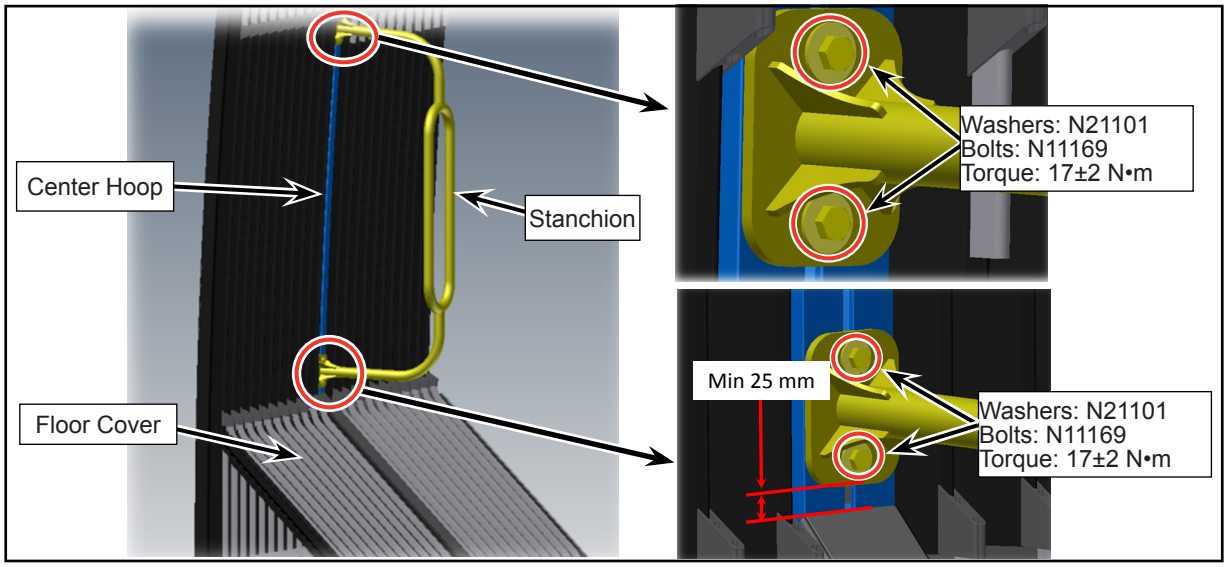

Figure 6 - Installation of New Stanchion

1.10. Ensure that the stanchion is vertical (perpendicular to the floor) (see Figure 7).

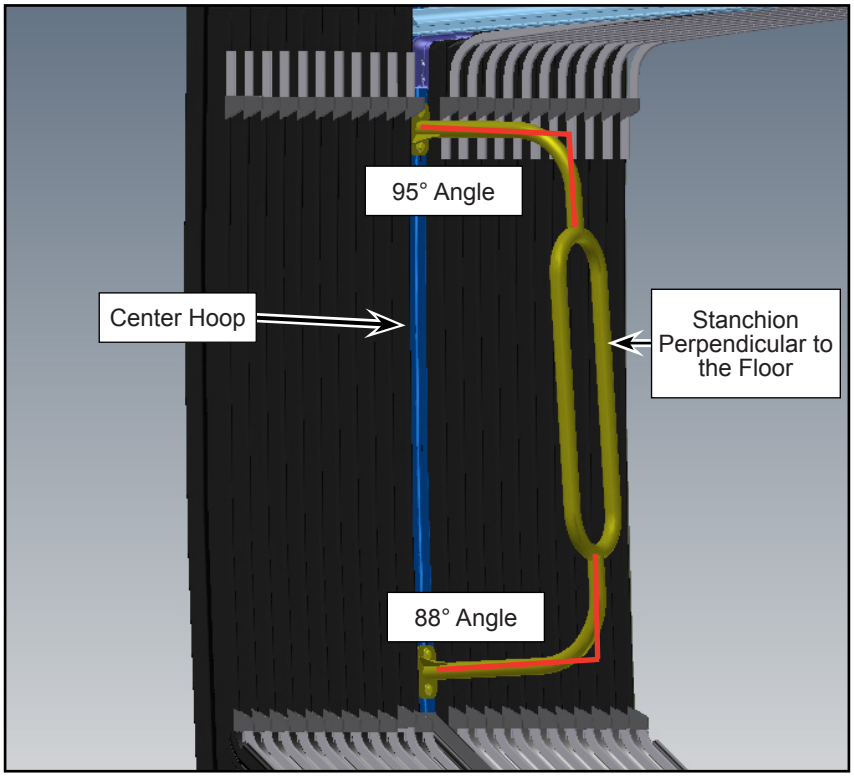

Figure 7 - Typical View of Stanchion Orientation

1.11. Apply torque seal on the bolts.

1.12. Set the Master control switch in the ON position.

1.13. The vehicle may be returned to service.