Emissions Recall
Code: 26J2

REVISION

Subject | **Catalysts**

Revision Summary

- **Added repair availability for A8 (criteria 4E) and A6 (criteria 4F).**
- **Updated claiming instructions.**
- **Note added to repair instructions regarding consequential damage.**

Release Date | February 19, 2018

Affected Vehicles | ***U.S.A. & CANADA:*** **Certain 2008-2011 MY Audi Vehicles with 4.2L FSI Gasoline Engine**

- **2008 MY Audi A8**
- **2008-2011 MY Audi A6 Sedan**
- **2008-2010 MY Audi S5 Coupe**

Check Campaigns/Actions screen in Elsa on the day of repair to verify that a VIN qualifies for repair under this action. Elsa is the only valid campaign inquiry & verification source.

- *Campaign status must show "open."*
- *If Elsa shows other open action(s), inform your customer so that the work can also be completed at the same time the vehicle is in the workshop for this campaign.*

Problem Description | Over time and mileage and under certain conditions, the factory-installed catalysts may not perform as required by Federal regulations. If the effectiveness of a catalyst is reduced, this may result in an increase in tailpipe emissions and the vehicle could fail to pass an emissions inspection.

Corrective Action | To ensure that the vehicle continues to meet emissions regulatory requirements, improved catalysts will be installed in affected vehicles.

Vehicle Repair Availability:

Criteria	Model	Repair Availability
8T	S5	RELEASED
4E	A8	RELEASED
4F	A6	RELEASED

Parts Information | Parts were allocated prior to owner notification. If allocated parts have been used and your dealership is at the weekly Upper Order Limit, please submit the backordered sales document number to upperorderlimits@audi.com to have additional parts released.

Code Visibility | On or about December 29, 2017, affected vehicles were listed on the Inventory Vehicle Open Campaign Action report under My Dealership Reports (found on www.accessaudi.com & OMD Web). A list was not posted for dealers who did not have any affected vehicles.

On or about December 29, 2017, this campaign code showed open on affected vehicles in Elsa.

On or about December 29, 2017, affected vehicles were identified with this campaign code in the VIN Lookup tool at www.audiusa.com.

The repair information in this document is intended for use only by skilled technicians who have the proper tools, equipment and training to correctly and safely maintain your vehicle. These procedures are not intended to be attempted by "do-it-yourselfers," and you should not assume this document applies to your vehicle, or that your vehicle has the condition described. To determine whether this information applies, contact an authorized Audi dealer. ©2018 Audi of America, Inc. and Audi Canada. All Rights Reserved.

Owner Notification	Owner notification for S5 vehicles took place in December 2017, followed by A6/A8 owner notification in February 2018. Owner letter examples are included in this bulletin for your reference.
Emissions Campaigns Requirements (CALIFORNIA ONLY)	The California Air Resources Board and the Department of Motor Vehicles (DMV) require emissions-related campaigns to be completed prior to vehicle registration renewal. When campaign work is done you must provide the owner with a signed "Vehicle Emission Recall – Proof of Correction" certificate (RC EMISCAVWAU). Order certificates online via the Compliance Label Ordering portal at www.accessaudi.com.
Additional Information	**Please alert everyone in your dealership about this action, including Sales, Service, Parts and Accounting personnel. Contact Warranty if you have any questions.** Dealers must ensure that every affected inventory vehicle has this campaign completed before delivery to consumers. Fill out and affix Campaign Completion Label (CAMP 010 000) after work is complete. *Labels can be ordered at no cost via the Compliance Label Ordering portal at www.accessaudi.com.*

The information in this document is intended for use only by skilled technicians who have the proper tools, equipment and training to correctly and safely maintain your vehicle. These procedures are not intended to be attempted by "do-it-yourselfers," and you should not assume this document applies to your vehicle, or that your vehicle has the condition described. To determine whether this information applies, contact an authorized Audi dealer. ©2018 Audi Group of America, Inc. and Audi Canada. All Rights Reserved.

Claim Entry Instructions

After campaign has been completed, enter claim as soon as possible to help prevent work from being duplicated elsewhere. Attach the Elsa screen print showing action *open on the day of repair* to the repair order.

If customer refused campaign work:

- ✓ U.S. dealers: Submit the request through Audi Warranty Online under the Campaigns/Update option.
- ✓ Canada dealers: Upload the repair order to Audi WIN/Operations/Campaign Closure.

Service Number	26J2
Damage Code	0099
Parts Vendor Code	002
Claim Type	Sold vehicle: 7 10 Unsold vehicle: 7 90
Causal Indicator	Mark Catalyst* as causal part
Vehicle Wash/Loaner	Do not claim wash/loaner under this action

The repair information in this document is intended for use only by skilled technicians who have the proper tools, equipment and training to correctly and safely maintain your vehicle. These procedures are not intended to be attempted by "do-it-yourselfers," and you should not assume this document applies to your vehicle, or that your vehicle has the condition described. To determine whether this information applies, contact an authorized Audi dealer. ©2018 Audi of America, Inc. and Audi Canada. All Rights Reserved.

Criteria I.D.	8T

Replace catalysts - S5 w/ Automatic Transmission.

Labor operation: 2673 19 99 540 T.U.

Quantity	Part Number	Description
1.00	8K0254252BX	Catalyst* - Right
1.00	8K0254200LX	Catalyst* - Left
2.00	1K0253141N	Exhaust Clamp
2.00	8K0253115A	Gasket - Catalyst to Manifold
2.00	8K0253115K	Gasket - Catalyst to Exhaust Pipe
2.00	N 02300313	Nut - Bracket to Cat
2.00	N 10518405	Bolt- Steering Shaft
2.00	N 90666003	O - Ring ATF Line
12.00	N 91130801	Nut - Catalysts
6.00	N 91151101	Subframe Crossbrace Bolts

-OR-

Replace catalysts - S5 w/ Manual Transmission from VIN 8T_8_023117 to FR_A_085253

Labor operation: 2673 20 99 1200 T.U.

Quantity	Part Number	Description
1.00	8K0254252BX	Catalyst* - Right
1.00	8K0254200LX	Catalyst* - Left
2.00	1K0253141N	Exhaust Clamp
2.00	8K0253115A	Gasket - Catalyst to Manifold
2.00	8K0253115K	Gasket - Catalyst to Exhaust Pipe
Up to 40.00	G 013A8JS0	Engine Coolant
2.00	N 02300313	Nut - Bracket to Catalyst
1.00	N 10139201	O-Ring - Right Coolant Pump to Flange
1.00	N 10518405	Bolt - Steering Shaft
6.00	N 10719001	Driveshaft Bolts
12.00	N 90441103	Bolt – Axle Shaft to Transmission
1.00	N 90761102	Nut - Gearshift Lever to Transmission
1.00	N 90912501	O-ring - Coolant Flange to Head
4.00	N 91129601	Bolt - Transmission to Engine
2.00	N 91129901	Bolt - Transmission to Engine
12.00	N 91130801	Nut - Catalysts
6.00	N 91143203	Bolt - Clutch Module to Drive Plate
2.00	N 91150701	Bolt - Transmission to Engine
6.00	N 91151101	Subframe Crossbrace Bolts
2.00	N 91153201	Bolt - Transmission to Engine

-OR-

Continued on next page.

The repair information in this document is intended for use only by skilled technicians who have the proper tools, equipment and training to correctly and safely maintain your vehicle. These procedures are not intended to be attempted by “do-it-yourselfers,” and you should not assume this document applies to your vehicle, or that your vehicle has the condition described. To determine whether this information applies, contact an authorized Audi dealer. ©2018 Audi of America, Inc. and Audi Canada. All Rights Reserved.

Replace catalysts - S5 w/ Manual Transmission from VIN 8T_ 8_005688 to 8T_8_023116.

Labor operation: 2673 21 99 1250 T.U.

Quantity	Part Number	Description
1.00	8K0254252BX	Catalyst* - Right
1.00	8K0254200LX	Catalyst* - Left
2.00	1K0253141N	Exhaust Clamp
1.00	4E0260749A	A/C line O-ring
1.00	8E0260749C	A/C line O-ring
2.00	8K0253115A	Gasket - Catalyst to Manifold
2.00	8K0253115K	Gasket - Catalyst to Exhaust Manifold
Up to 40.00	G 013A8JS0	Engine Coolant
2.00	N 02300313	Nut - Bracket to Catalyst
2.00	N 10106402	Nut - Lower Control Arm
1.00	N 10139201	O-Ring - Right Coolant Pump to Flange
2.00	N 10241202	Bolt - Lower Control Arm
2.00	N 10255501	Power Steering Line Hose Clamp
2.00	N 10286110	Nut - Upper Guide Link
2.00	N 10425302	Bolt - Upper Guide Link
1.00	N 10518405	Bolt- Steering Shaft
2.00	N 10699901	Bolt - Stabilizer Link
6.00	N 10719001	Driveshaft Bolts
3.00	N 90761102	Nut - Gearshift Lever & Lock Carrier Brace
1.00	N 90912501	O-ring - Coolant Flange to Head
2.00	N 90986501	Fuel Line Clamps
12.00	N 91130801	Nut - Catalysts
6.00	N 91151101	Subframe Crossbrace Bolts
8.00	WHT005657	Subframe Bolt

Criteria I.D. 4E

Replace catalysts.

Labor operation: 2673 22 99 1080 T.U.

Quantity	Part Number	Description
1.00	079253019JX	Catalyst* - Left
1.00	079253020JX	Catalyst* - Right
2.00	079253039F	Gasket
2.00	1K0253141N	Exhaust Clamp
2.00	8D0253115C	Gasket
Up to 40.00	G 013A8JS0	Engine Coolant
2.00	N 02300313	Nut - Bracket to Catalyst
2.00	N 90329206	Engine Mount Bolt
20.00	N 90894601	Nuts
2.00	N 91001302	Subframe Bolt
4.00	N 91024802	Engine Carrier Bolt
6.00	N 91130801	Nut - Catalysts
2.00	WHT001011	Coolant line to Alternator O-ring

Continued on next page.

The repair information in this document is intended for use only by skilled technicians who have the proper tools, equipment and training to correctly and safely maintain your vehicle. These procedures are not intended to be attempted by “do-it-yourselfers,” and you should not assume this document applies to your vehicle, or that your vehicle has the condition described. To determine whether this information applies, contact an authorized Audi dealer. ©2018 Audi of America, Inc. and Audi Canada. All Rights Reserved.

Criteria I.D.	4F
	Replace catalysts. Labor operation: 2673 23 99 870 T.U.

Quantity	Part Number	Description
1.00	079253019JX	Catalyst* - Left
1.00	079253020JX	Catalyst* - Right
2.00	079253039F	Gasket
2.00	1K0253141N	Exhaust Clamp
2.00	8D0253115C	Gasket
Up to 40.00	G 013A8JS0	Engine Coolant
2.00	N 02300313	Nut - Bracket to Catalyst
20.00	N 90894601	Nut – Catalyst to Engine
3.00	N 91048401	Subframe Bolt
6.00	N 91130801	Nut - Catalysts
2.00	WHT001011	Coolant line to Alternator O-ring

The repair information in this document is intended for use only by skilled technicians who have the proper tools, equipment and training to correctly and safely maintain your vehicle. These procedures are not intended to be attempted by “do-it-yourselfers,” and you should not assume this document applies to your vehicle, or that your vehicle has the condition described. To determine whether this information applies, contact an authorized Audi dealer. ©2018 Audi of America, Inc. and Audi Canada. All Rights Reserved.

Customer Letter Example (United States)

<MONTH YEAR>

<CUSTOMER NAME>
<CUSTOMER ADDRESS>
<CUSTOMER CITY STATE ZIPCODE>

This notice applies to your vehicle: <VIN>

Subject: Emissions Recall 26J2 – Catalysts
Certain 2008-2011 Model Year Audi Vehicles with 4.2L FSI Gasoline Engine

Dear Audi Owner,

In cooperation with the United States Environmental Protection Agency and the California Air Resources Board, we are informing you of our decision to conduct an emissions recall on certain 2008-2011 model year Audi 4.2L FSI gasoline engine vehicles. Our records show that you are the owner of a vehicle affected by this action.

What is the issue?	Over time and mileage and under certain conditions, the factory-installed catalysts may not perform as required by Federal regulations. If the effectiveness of a catalyst is reduced, this may result in an increase in tailpipe emissions and the vehicle could fail to pass an emissions inspection.
What will we do?	To ensure that the vehicle continues to meet emissions regulatory requirements, your authorized Audi dealer will install improved catalysts. This work will take up to two days to complete and will be performed for you free of charge. Please keep in mind that your dealer may need additional time for the preparation of the repair, as well as to accommodate their daily workshop schedule.
What should you do?	In order to limit any possible inconvenience, please contact your authorized Audi dealer as soon as possible to schedule this service. For your convenience, you can also visit www.audiusa.com and click on the "Find a Dealer" link to locate a dealer near you and schedule this service.
Lease vehicles and address changes	If you are the lessor and registered owner of the vehicle identified in this action, please forward this letter immediately via first-class mail to the lessee within ten (10) days of receipt. If you have changed your address or sold the vehicle, please fill out the enclosed prepaid Owner Reply card and mail it to us so we can update our records.
Important information for California Vehicle Owners – California Regulations	California regulations require that this campaign be completed prior to the time you renew your vehicle registration. Therefore, **please make sure that this campaign is completed prior to the renewal of your vehicle registration**, and that you furnish proof of completion to the Department of Motor Vehicles (DMV) in the form of a copy of the dealer's repair order, including a signed "Proof of Correction" certificate. You obtain this from your dealer after the campaign has been completed. Please retain the signed "Proof of Correction Certificate" with your vehicle records. DO NOT MAIL THIS FORM to the DMV, unless requested.
Reimbursement of Expenses	If you have previously paid for repairs relating to the condition described in this letter, the enclosed form explains how to request reimbursement. We would be pleased to review your reimbursement request.
Can we assist you further?	If your authorized Audi dealer fails or is unable to complete this work free of charge within a reasonable time, please contact Audi Customer Experience at 1-800-253-2834 or via our "Contact Us" page at www.audiusa.com.
Checking your vehicle for open Recalls and Service Campaigns	To check your vehicle's eligibility for repair under this or any other recall/service campaign, please visit the ***Recall/Service Campaign Lookup*** tool at www.audiusa.com and enter your Vehicle Identification Number (VIN).

We apologize for any inconvenience this matter may cause; however we are taking this action to help ensure your vehicle continues to meet and exceed your expectations.

Sincerely,

Audi Customer Protection

The repair information in this document is intended for use only by skilled technicians who have the proper tools, equipment and training to correctly and safely maintain your vehicle. These procedures are not intended to be attempted by "do-it-yourselfers," and you should not assume this document applies to your vehicle, or that your vehicle has the condition described. To determine whether this information applies, contact an authorized Audi dealer. ©2018 Audi of America, Inc. and Audi Canada. All Rights Reserved.

Customer Letter Example (CANADA) S5 VEHICLES ONLY – DECEMBER 29, 2017 REPAIR DATE

<MONTH YEAR>

<CUSTOMER NAME>
<CUSTOMER ADDRESS>
<CUSTOMER CITY STATE ZIPCODE>

This notice applies to your vehicle: <VIN>

Subject: Emissions Recall 26J2 – Catalysts
Certain 2008-2011 Model Year Audi Vehicles with 4.2L FSI Gasoline Engine

Dear Audi Owner,

This notice is sent to you in accordance with the requirements of the *Canadian Environmental Protection Act, 1999*. Audi has determined that a defect, which relates to a prescribed emission standard, exists in certain 2008-2011 model year Audi 4.2L FSI gasoline engine vehicles. Our records show that you are the owner of a vehicle affected by this action.

What is the issue?

Over time and mileage and under certain conditions, the factory-installed catalysts may not perform as required by Federal regulations. If the effectiveness of a catalyst is reduced, this may result in an increase in tailpipe emissions and the vehicle could fail to pass an emissions inspection.

What will we do?

To ensure that the vehicle continues to meet emissions regulatory requirements, your authorized Audi dealer will install improved catalysts. This work will take up to two days to complete and will be performed for you free of charge. Please keep in mind that your dealer may need additional time for the preparation of the repair, as well as to accommodate their daily workshop schedule.

What should you do?

In order to limit any possible inconvenience, please contact your authorized Audi dealer as soon as possible to schedule this service.

On or about December 29, 2017 the necessary repair instructions and parts will be available to your authorized Audi dealer.

Lease vehicles and address changes

If you are the lessor and registered owner of the vehicle identified in this action, please forward this letter immediately via first-class mail to the lessee within ten (10) days of receipt. If you have changed your address or sold the vehicle, please fill out the enclosed prepaid Owner Reply card and mail it to us so we can update our records.

Reimbursement of Expenses

If you have previously paid for repairs relating to the condition described in this letter, the enclosed form explains how to request reimbursement. We would be pleased to review your reimbursement request.

Can we assist you further?

If your authorized Audi dealer fails or is unable to complete this work free of charge within a reasonable time, please contact Audi Customer Relations Monday through Friday from 8AM to 8PM EST at 1-800-822-2834 or via our "Contact Audi Canada" page at www.audi.ca.

We apologize for any inconvenience this matter may cause; however we are taking this action to help ensure your vehicle continues to meet and exceed your expectations.

Sincerely,

Audi Customer Protection

The repair information in this document is intended for use only by skilled technicians who have the proper tools, equipment and training to correctly and safely maintain your vehicle. These procedures are not intended to be attempted by "do-it-yourselfers," and you should not assume this document applies to your vehicle, or that your vehicle has the condition described. To determine whether this information applies, contact an authorized Audi dealer. ©2018 Audi of America, Inc. and Audi Canada. All Rights Reserved.

Customer Letter Example (CANADA) A6/A8 VEHICLES ONLY – February 2018 REPAIR DATE

<MONTH YEAR>

<CUSTOMER NAME>
<CUSTOMER ADDRESS>
<CUSTOMER CITY STATE ZIPCODE>

This notice applies to your vehicle: <VIN>

Subject: Emissions Recall 26J2 – Catalysts
Certain 2008-2011 Model Year Audi Vehicles with 4.2L FSI Gasoline Engine

Dear Audi Owner,

This notice is sent to you in accordance with the requirements of the *Canadian Environmental Protection Act, 1999*. Audi has determined that a defect, which relates to a prescribed emission standard, exists in certain 2008-2011 model year Audi 4.2L FSI gasoline engine vehicles. Our records show that you are the owner of a vehicle affected by this action.

What is the issue?

Over time and mileage and under certain conditions, the factory-installed catalysts may not perform as required by Federal regulations. If the effectiveness of a catalyst is reduced, this may result in an increase in tailpipe emissions and the vehicle could fail to pass an emissions inspection.

What will we do?

To ensure that the vehicle continues to meet emissions regulatory requirements, your authorized Audi dealer will install improved catalysts. This work will take up to two days to complete and will be performed for you free of charge. Please keep in mind that your dealer may need additional time for the preparation of the repair, as well as to accommodate their daily workshop schedule.

What should you do?

In order to limit any possible inconvenience, please contact your authorized Audi dealer as soon as possible to schedule this service.

In February 2018 the necessary repair instructions and parts will be available to your authorized Audi dealer.

Lease vehicles and address changes

If you are the lessor and registered owner of the vehicle identified in this action, please forward this letter immediately via first-class mail to the lessee within ten (10) days of receipt. If you have changed your address or sold the vehicle, please fill out the enclosed prepaid Owner Reply card and mail it to us so we can update our records.

Reimbursement of Expenses

If you have previously paid for repairs relating to the condition described in this letter, the enclosed form explains how to request reimbursement. We would be pleased to review your reimbursement request.

Can we assist you further?

If your authorized Audi dealer fails or is unable to complete this work free of charge within a reasonable time, please contact Audi Customer Relations Monday through Friday from 8AM to 8PM EST at 1-800-822-2834 or via our "Contact Audi Canada" page at www.audi.ca.

We apologize for any inconvenience this matter may cause; however we are taking this action to help ensure your vehicle continues to meet and exceed your expectations.

Sincerely,

Audi Customer Protection

The repair information in this document is intended for use only by skilled technicians who have the proper tools, equipment and training to correctly and safely maintain your vehicle. These procedures are not intended to be attempted by "do-it-yourselfers," and you should not assume this document applies to your vehicle, or that your vehicle has the condition described. To determine whether this information applies, contact an authorized Audi dealer. ©2018 Audi of America, Inc. and Audi Canada. All Rights Reserved.

NOTE

- Damages resulting from improper repair or failure to follow these work instructions are the dealer's responsibility and are not eligible for reimbursement under this action.
- This procedure must be read in its entirety prior to performing the repair.
- Due to variations in vehicle equipment and options, the steps/illustrations in this work procedure may not identically match all affected vehicles.
- Diagnosis and repair of pre-existing conditions in the vehicle are not covered under this action.

Vehicle Repair Availability

Criteria	Model	Repair Availability
8T	S5	RELEASED
4E	A8	RELEASED
4F	A6	RELEASED

Required Parts

Model/Criteria	Quantity	Part Number	Part Description
S5 w/ Automatic Transmission (criteria 8T)	1	8K0254252BX	Catalyst - Right
	1	8K0254200LX	Catalyst - Left
	2	8K0253115A	Gasket - Catalyst to manifold
	2	8K0253115K	Gasket - Catalyst to exhaust
	12	N 91130801	Nut - Catalysts
	2	N 02300313	Nut - Bracket to Catalyst
	2	1K0253141N	Exhaust Clamp
	6	N 91151101	Subframe Crossbrace Bolts
	2	N 10518405	Bolt- Steering Shaft
	2	N 90666003	O - Ring ATF Line

The repair information in this document is intended for use only by skilled technicians who have the proper tools, equipment and training to correctly and safely maintain your vehicle. These procedures are not intended to be attempted by "do-it-yourselfers," and you should not assume this document applies to your vehicle, or that your vehicle has the condition described. To determine whether this information applies, contact an authorized Audi dealer. ©2018 Audi of America, Inc. and Audi Canada. All Rights Reserved.

Model/Criteria	Quantity	Part Number	Part Description
S5 w/ Manual Transmission after VIN 8T_8_023117 (criteria 8T)	1	8K0254252BX	Catalyst - Right
	1	8K0254200LX	Catalyst - Left
	2	8K0253115A	Gasket - Catalyst to Manifold
	2	8K0253115K	Gasket - Catalyst to Exhaust Pipe
	12	N 91130801	Nut - Catalysts
	2	N 02300313	Nut - Bracket to Catalyst
	4	N 91129601	Bolt – Transmission to Engine
	2	N 91129901	Bolt - Transmission to Engine
	2	N 91153201	Bolt - Transmission to Engine
	SEE ETKA		Engine Coolant
	2	N 91150701	Bolt - Transmission to Engine
	2	1K0253141N	Exhaust Clamp
	6	N 91151101	Subframe Crossbrace Bolts
	6	N 10719001	Driveshaft Bolts
	1	N 10518405	Bolt- Steering Shaft
	1	N 10139201	O-Ring - Right Coolant Pump to Flange
	1	N 90912501	O-ring - Coolant Flange to Head
	1	N 90761102	Nut - Gearshift Lever to Transmission
	6	N 91143203	Bolt - Clutch Module to Drive Plate
	12	N 90441103	Bolt - Axle Shaft to Transmission

The repair information in this document is intended for use only by skilled technicians who have the proper tools, equipment and training to correctly and safely maintain your vehicle. These procedures are not intended to be attempted by "do-it-yourselfers," and you should not assume this document applies to your vehicle, or that your vehicle has the condition described. To determine whether this information applies, contact an authorized Audi dealer. ©2018 Audi of America, Inc. and Audi Canada. All Rights Reserved.

Model/Criteria	Quantity	Part Number	Part Description
S5 w/ Manual Transmission before VIN 8T_8_023117 (criteria 8T)	1	8K0254252BX	Catalyst - Right
	1	8K0254200LX	Catalyst - Left
	2	8K0253115A	Gasket - Catalyst to Manifold
	2	8K0253115K	Gasket - Catalyst to Exhaust Pipe
	12	N 91130801	Nut - Catalysts
	2	N 02300313	Nut - Bracket to Catalyst
	2	1K0253141N	Exhaust Clamp
	6	N 91151101	Subframe Crossbrace Bolts
	6	N 10719001	Driveshaft Bolts
	1	N 10518405	Bolt- Steering Shaft
	1	N 10139201	O-Ring - Right Coolant Pump to Flange
	1	N 90912501	O-ring - Coolant Flange to Head
	SEE ETKA		Engine Coolant
	1	N 90761102	Nut - Gearshift Lever to Transmission
	2	N 10255501	Power Steering Line Hose Clamp
	8	WHT005657	Subframe Bolt
	2	N 90986501	Fuel Line Clamps
	2	N 90761102	Bolt - Lock Carrier Brace
	1	4E0260749A	A/C line O-ring
	1	8E0260749C	A/C line O-ring
	2	N 10106402	Nut - Lower Control Arm
	2	N 10241202	Bolt - Lower control arm
	2	N 10699901	Bolt - Stabilizer Link
	4	N 10425302	Bolt - Upper Guide Link
	4	N 10286110	Nut - Upper Guide Link

The repair information in this document is intended for use only by skilled technicians who have the proper tools, equipment and training to correctly and safely maintain your vehicle. These procedures are not intended to be attempted by "do-it-yourselfers," and you should not assume this document applies to your vehicle, or that your vehicle has the condition described. To determine whether this information applies, contact an authorized Audi dealer. ©2018 Audi of America, Inc. and Audi Canada. All Rights Reserved.

Model/Criteria	Quantity	Part Number	Part Description
A8 (criteria 4E)	1	079253019JX	Catalyst - Left
	1	079253020JX	Catalyst - Right
	1	079103484C	Right Cylinder Head Cover Gasket
	1	079103650C	Gasket
	2	079253039F	Gasket
	2	1K0253141N	Exhaust Clamp
	2	8D0253115C	Gasket
	SEE ETKA		Engine Coolant
	2	N 02300313	Nut - Bracket to Catalyst
	2	N 90329206	Engine Mount Bolt
	20	N 90894601	Nuts
	2	N 91001302	Subframe Bolt
	4	N 91024802	Engine Carrier Bolt
	6	N 91130801	Nut - Catalysts
	2	WHT001011	Coolant line to Alternator O-ring

Model/Criteria	Quantity	Part Number	Part Description
A6 (criteria 4F)	1.00	079253019JX	Catalyst - Left
	1.00	079253020JX	Catalyst - Right
	2.00	079253039F	Gasket
	2.00	1K0253141N	Exhaust Clamp
	2.00	8D0253115C	Gasket
	SEE ETKA		Engine Coolant
	2.00	N 02300313	Nut - Bracket to Catalyst
	20.00	N 90894601	Nut – Catalyst to Engine
	3.00	N 91048401	Subframe Bolt
	6.00	N 91130801	Nut - Catalysts
	2.00	WHT001011	Coolant line to Alternator O-ring

The repair information in this document is intended for use only by skilled technicians who have the proper tools, equipment and training to correctly and safely maintain your vehicle. These procedures are not intended to be attempted by "do-it-yourselfers," and you should not assume this document applies to your vehicle, or that your vehicle has the condition described. To determine whether this information applies, contact an authorized Audi dealer. ©2018 Audi of America, Inc. and Audi Canada. All Rights Reserved.

Required Tools

	Engine Bung Set -VAS6122- (or equivalent)		Socket and Jointed Extension - 12mm -T40220- (or equivalent)
	Spring-type Clip Pliers -VAS6930- (or equivalent)		Engine/Gearbox Jack Gearbox Support -T10337-
	Ring Wrench 7-Piece Set -3337- (or equivalent)		Torque Wrench 1332 40-200 Nm -VAG1332- (or equivalent)
	Engine Support Bridge -10-222A-		Engine Support Supplement Set -T40093B-
	Engine/Gearbox Jack Adapter - Wheel Hub Support -T10149-		Tensioning Straps -T10038- (or equivalent)

The repair information in this document is intended for use only by skilled technicians who have the proper tools, equipment and training to correctly and safely maintain your vehicle. These procedures are not intended to be attempted by "do-it-yourselfers," and you should not assume this document applies to your vehicle, or that your vehicle has the condition described. To determine whether this information applies, contact an authorized Audi dealer. ©2018 Audi of America, Inc. and Audi Canada. All Rights Reserved.

	Pry Lever -80-200- (or equivalent)		Torque Wrench 5-50 Nm -VAG1331- (or equivalent)
	Used Oil Collection And Extraction Unit -SMN372500- (or equivalent)		Scissor Lift Table -VAS6131B-
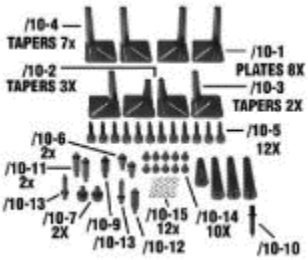	Scissor Lift Table - Audi Set -VAS6131/10-		Scissor Lift Table - A8 Set -VAS6131/11-
	Scissor Lift Table - Q7 Set -VAS6131/13-		Hose Clip Pliers -VAS6340- (or equivalent)
	Puller - Gear Shaft Linkage -T40160-		Robinair A/C Service Unit -ROB134APF-
	Wrench - Front Silencer - 12mm -T40252- (or equivalent)		

The repair information in this document is intended for use only by skilled technicians who have the proper tools, equipment and training to correctly and safely maintain your vehicle. These procedures are not intended to be attempted by "do-it-yourselfers," and you should not assume this document applies to your vehicle, or that your vehicle has the condition described. To determine whether this information applies, contact an authorized Audi dealer. ©2018 Audi of America, Inc. and Audi Canada. All Rights Reserved.

Repair Instruction

Section A - Check for Previous Repair

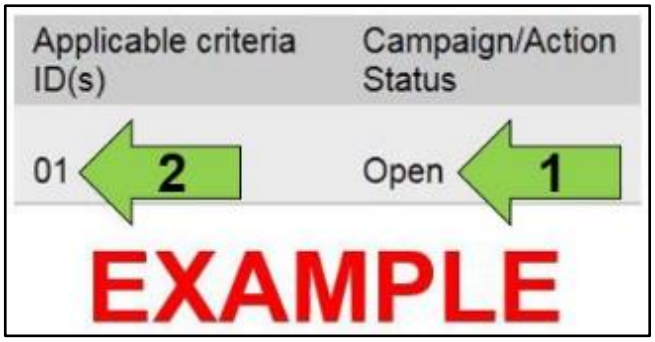

- Enter the VIN in Elsa and proceed to the "Campaign/Action" screen.

TIP

On the date of repair, print this screen and keep a copy with the repair order.

- Confirm the Campaign/Action is open <arrow 1>. If the status is closed, no further work is required.

- Note the Applicable Criteria ID <arrow 2> for use in determining the correct work to be done and corresponding parts associated.

Criteria	Section
8T	B
4E	C
4F	D

The repair information in this document is intended for use only by skilled technicians who have the proper tools, equipment and training to correctly and safely maintain your vehicle. These procedures are not intended to be attempted by "do-it-yourselfers," and you should not assume this document applies to your vehicle, or that your vehicle has the condition described. To determine whether this information applies, contact an authorized Audi dealer. ©2018 Audi of America, Inc. and Audi Canada. All Rights Reserved.

Section B – Repair Procedure: S5 (Criteria 8T)

NOTE

- S5 with automatic transmission requires to lower the rear of the transmission.
- S5 with manual transmission after VIN 8T_8_023117 requires only transmission removal.
- S5 with manual transmission up to VIN 8T_8_023117 requires engine and transmission removal.

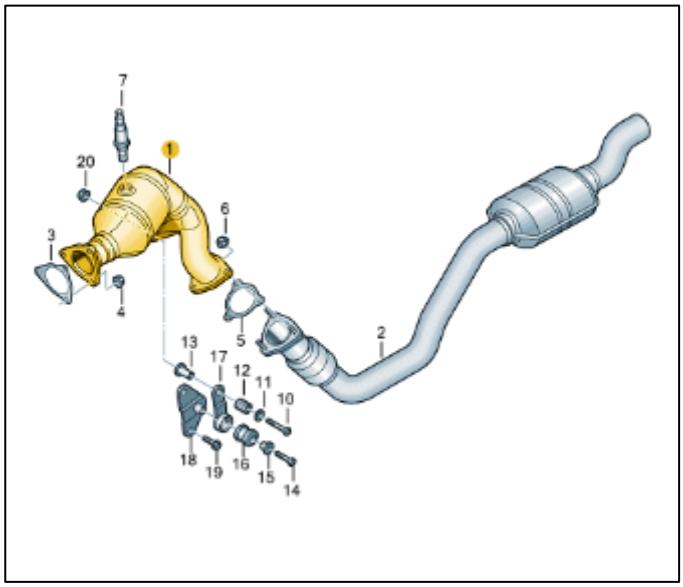

- Refer to the ELSA repair manual for repair instructions for replacing the left and right catalysts: *Repair manual > Engine > 8-Cylinder Direct Injection 4.2L 4V Engine > 26 Exhaust System, Emission Controls > Emissions Control > Catalytic Converter, Removing and Installing.*

CAUTION

Risk of Consequential Damage

- All exhaust nuts must be soaked with penetrating oil prior to removal to avoid exhaust stud breakage.
- All exhaust nuts should be removed using hand tools and not impact tools.
- Any rusted fastener should also be soaked with penetrating oil to avoid breakage.

NOTE

All self-locking and torque to yield fasteners must be replaced.

- Refer to the following subsections regarding each repair:
  - Subsection 1 – Repair Notes: S5 with Automatic Transmission
  - Subsection 2 – Repair Notes: S5 with Manual Transmission after VIN 8T_8_023117.

- **Proceed to Section E.**

The repair information in this document is intended for use only by skilled technicians who have the proper tools, equipment and training to correctly and safely maintain your vehicle. These procedures are not intended to be attempted by "do-it-yourselfers," and you should not assume this document applies to your vehicle, or that your vehicle has the condition described. To determine whether this information applies, contact an authorized Audi dealer. ©2018 Audi of America, Inc. and Audi Canada. All Rights Reserved.

- The oxygen sensors should be removed prior to raising the vehicle.

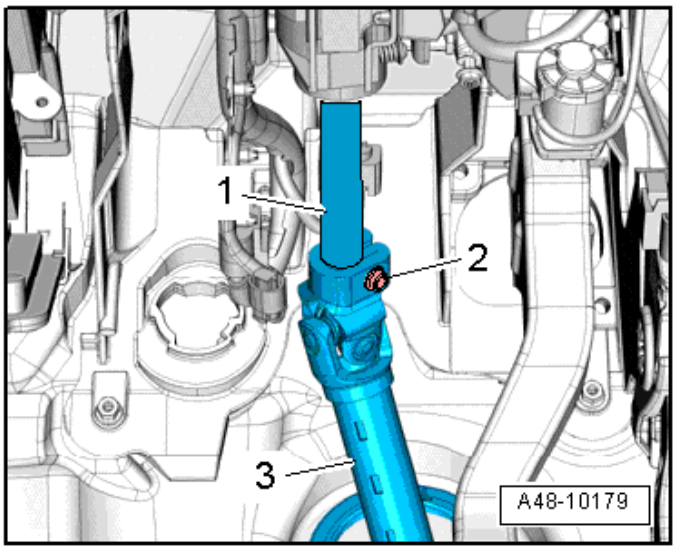

- Remove the bolt <2> and remove the steering intermediate shaft <3> from the steering column <1>.
- Doing so will allow the steering shaft more room to move when removing the left catalyst.
- When installing, use a new bolt and torque to 30 Nm + 90°.

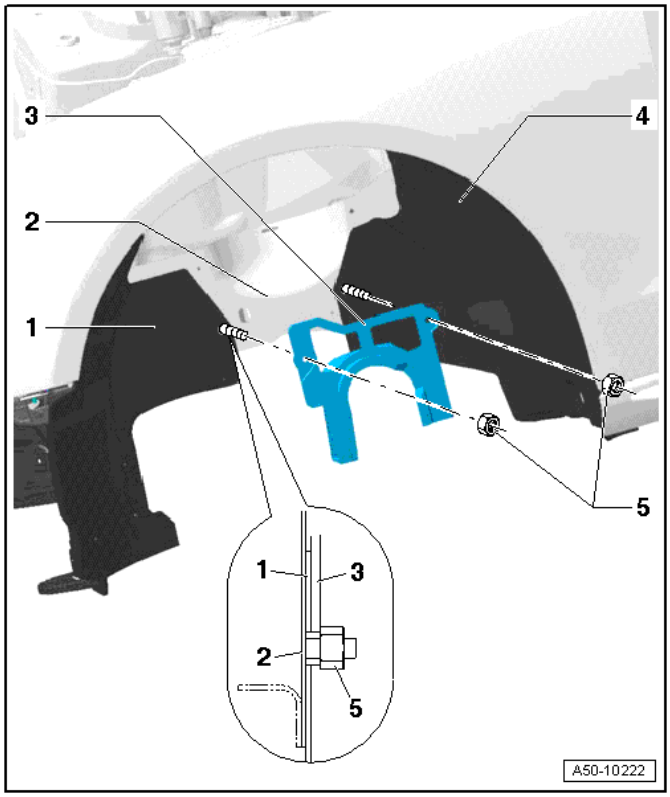

- The left front wheel house liner <4> and driveshaft cover <3> will need to be removed.

The repair information in this document is intended for use only by skilled technicians who have the proper tools, equipment and training to correctly and safely maintain your vehicle. These procedures are not intended to be attempted by "do-it-yourselfers," and you should not assume this document applies to your vehicle, or that your vehicle has the condition described. To determine whether this information applies, contact an authorized Audi dealer. ©2018 Audi of America, Inc. and Audi Canada. All Rights Reserved.

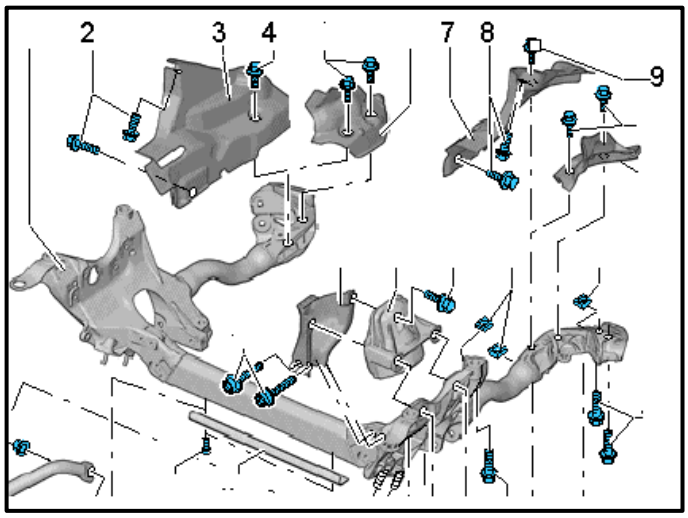

- Subframe heat shields <3> and <7> require removal.
- Torque bolts <2 and 8> to 9 Nm and bolts <4 and 9> to 20 Nm after reinstallation.

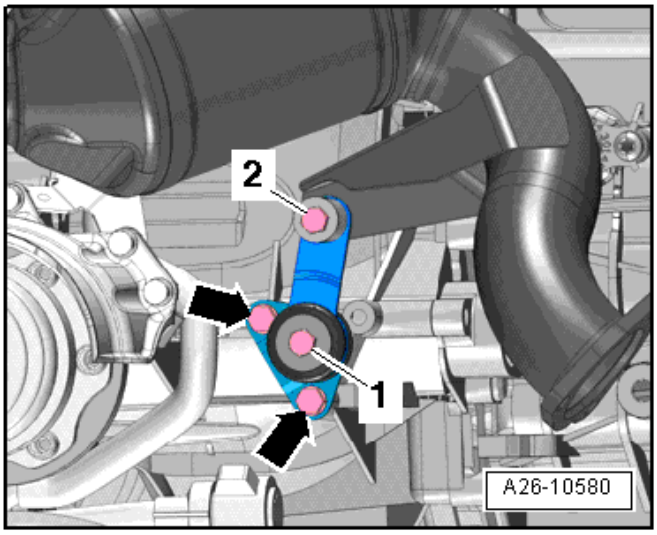

- The left catalyst bracket should be removed before loosening the ATF line bolts.

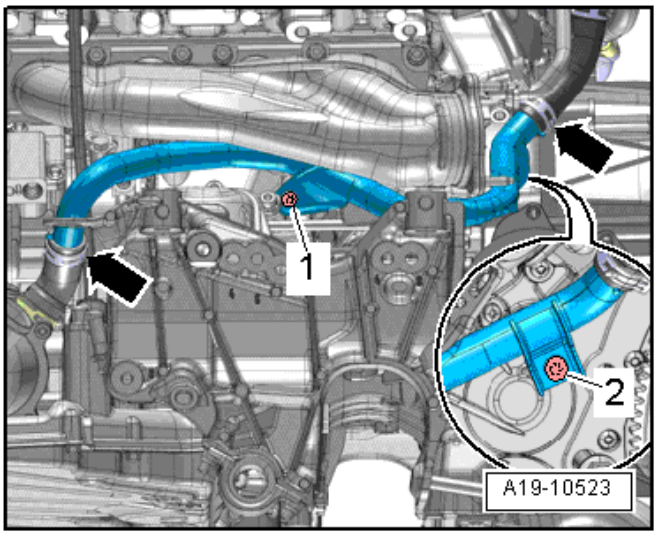

- Removing bolt <2> will allow easier access to the catalyst-to-manifold nuts.
- The coolant line does not require removal.
- Torque bolt <2> to 9 Nm after reinstallation.

The repair information in this document is intended for use only by skilled technicians who have the proper tools, equipment and training to correctly and safely maintain your vehicle. These procedures are not intended to be attempted by "do-it-yourselfers," and you should not assume this document applies to your vehicle, or that your vehicle has the condition described. To determine whether this information applies, contact an authorized Audi dealer. ©2018 Audi of America, Inc. and Audi Canada. All Rights Reserved.

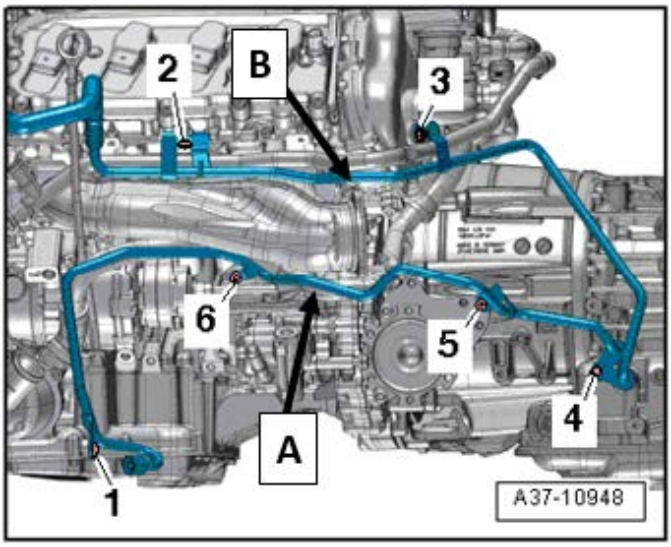

- The ATF line <A> has be loosened, but does not need to be removed from the vehicle.
- ATF line <B> does not need to be removed or loosened.
- When reinstalling bolts, start bolt <6> before installing bolts <1, 4 and 5>.

The repair information in this document is intended for use only by skilled technicians who have the proper tools, equipment and training to correctly and safely maintain your vehicle. These procedures are not intended to be attempted by "do-it-yourselfers," and you should not assume this document applies to your vehicle, or that your vehicle has the condition described. To determine whether this information applies, contact an authorized Audi dealer. ©2018 Audi of America, Inc. and Audi Canada. All Rights Reserved.

Subsection 2 – Repair Notes: S5 with Manual Transmission after VIN 8T_8_023117

- The oxygen sensors should be removed prior to raising the vehicle.
- The right catalyst can be removed after the transmission is moved back approximately 100mm and lowered approximately 175mm.
- The right coolant pipe needs to be loosened, but does not require complete removal. Therefore, the right exhaust manifold does not require removal.

Section C – Repair Procedure: A8 (Criteria 4E)

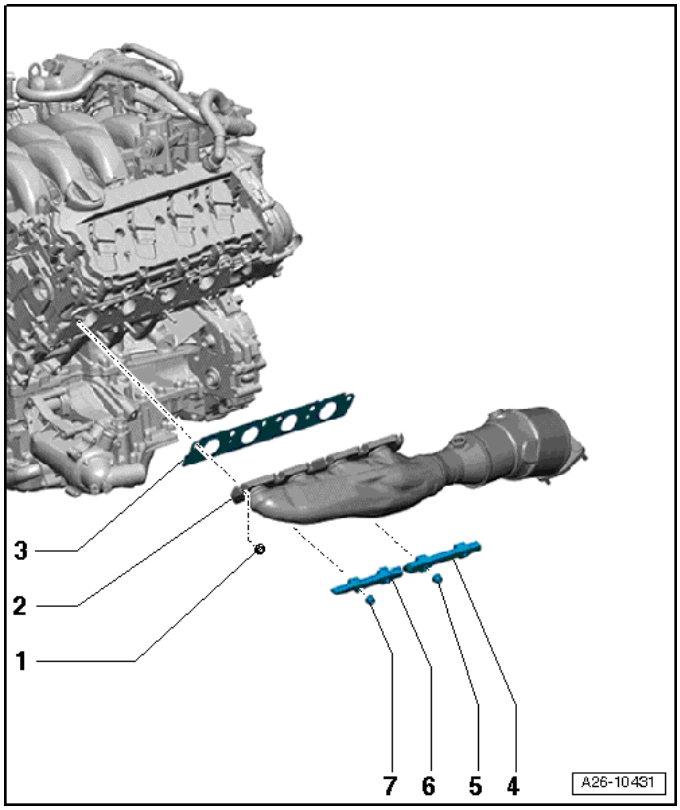

- Refer to the ELSA repair manual for repair instructions for replacing the left and right catalysts: *Repair manual > Engine > Engine Mechanical > 26 Exhaust System, Emission Controls > Removal and Installation > Left Exhaust Manifold with Catalytic Converter* AND *Right Exhaust Manifold with Catalytic Converter.*

CAUTION

Risk of Consequential Damage

- All exhaust nuts must be soaked with penetrating oil prior to removal to avoid exhaust stud breakage.
- All exhaust nuts should be removed using hand tools and not impact tools.
- Any rusted fastener should also be soaked with penetrating oil to avoid breakage.

NOTE

All self-locking and torque to yield fasteners must be replaced.

- **Proceed to Section E.**

The repair information in this document is intended for use only by skilled technicians who have the proper tools, equipment and training to correctly and safely maintain your vehicle. These procedures are not intended to be attempted by "do-it-yourselfers," and you should not assume this document applies to your vehicle, or that your vehicle has the condition described. To determine whether this information applies, contact an authorized Audi dealer. ©2018 Audi of America, Inc. and Audi Canada. All Rights Reserved.

Section D – Repair Procedure: A6 (Criteria 4F)

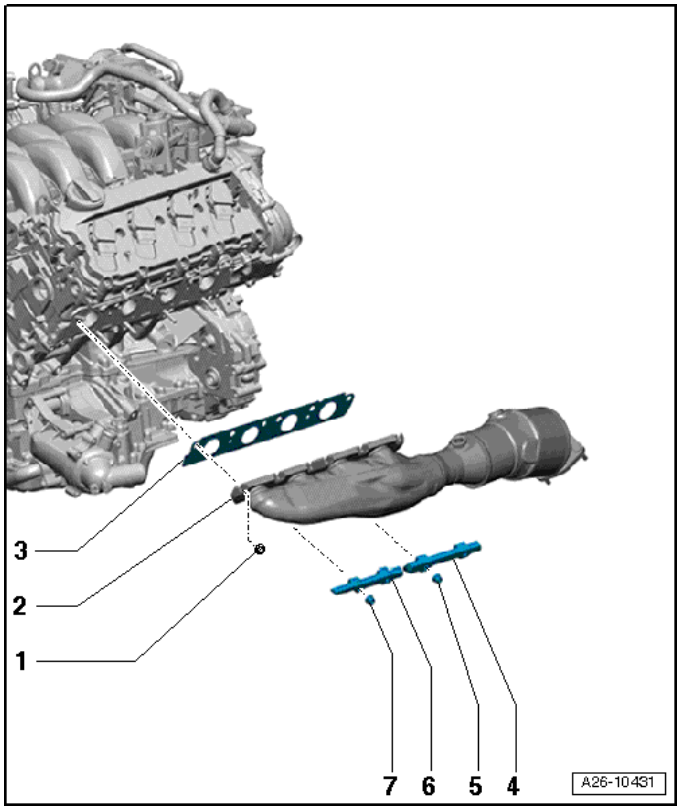

- Refer to the ELSA repair manual for repair instructions for replacing the left and right catalysts: *Repair manual > Engine > Engine Mechanical > 26 Exhaust System, Emission Controls > Removal and Installation > Left Exhaust Manifold with Catalytic Converter* AND *Right Exhaust Manifold with Catalytic Converter.*

CAUTION

Risk of Consequential Damage

- All exhaust nuts must be soaked with penetrating oil prior to removal to avoid exhaust stud breakage.
- All exhaust nuts should be removed using hand tools and not impact tools.
- Any rusted fastener should also be soaked with penetrating oil to avoid breakage.

NOTE

All self-locking and torque to yield fasteners must be replaced.

- **Proceed to Section E.**

Section E – Campaign Completion Stamp

The repair information in this document is intended for use only by skilled technicians who have the proper tools, equipment and training to correctly and safely maintain your vehicle. These procedures are not intended to be attempted by "do-it-yourselfers," and you should not assume this document applies to your vehicle, or that your vehicle has the condition described. To determine whether this information applies, contact an authorized Audi dealer. ©2018 Audi of America, Inc. and Audi Canada. All Rights Reserved.

I certify that this campaign has been performed in strict accordance with the applicable Audi repair procedure.

SAGA Code: _____

Technician: _____

Date: _____

Item#: AUD4927ENG

-OR-

Je certifie que cette campagne de rappel a été exécutée suivant les strictes directives de réparation d'Audi

Code de SAGA: _____

Technicien: _____

Date: _____

Item # AUD4927FRE

- Once the campaign has been completed, the technician should stamp the repair order.
- Stamps are available for ordering through the Compliance Label Ordering Portal.
- **Proceed to Section F.**

Section F - Parts Return/Disposal

Properly store (retain), destroy or dispose of removed parts in accordance with all state/province and local requirements, unless otherwise indicated and/or requested through the Warranty Parts Portal (WPP) for U.S. and the Part Destruction and Core Disposition Report for Canada.

Proceed to Section G (California only).

Section G – California Only Requirements

CALIFORNIA ONLY Requirements for Emissions Campaigns Having Customer Notification

The California Air Resources Board and the Department of Motor Vehicles (DMV) require emissions-related campaigns to be completed prior to vehicle registration renewal. **When campaign work is done you must provide the owner with a signed "Vehicle Emission Recall – Proof of Correction" certificate (RC EMIS_CAL VW).** Certificates can be ordered at no cost online via the Compliance Label Ordering portal at www.accessaudi.com.

TIP

Ensure owners are aware of the importance of retaining the completed certificate for their records. It should be mailed to the California DMV *only upon request.*

The repair information in this document is intended for use only by skilled technicians who have the proper tools, equipment and training to correctly and safely maintain your vehicle. These procedures are not intended to be attempted by "do-it-yourselfers," and you should not assume this document applies to your vehicle, or that your vehicle has the condition described. To determine whether this information applies, contact an authorized Audi dealer. ©2018 Audi of America, Inc. and Audi Canada. All Rights Reserved.