Service Campaign

CC-17-20-07

MODEL: Karma Revero

DATE: June 2017

Revised: February 2018

TITLE: PTC Heater Replacement

APPLICABILITY: Specified VINs below

MARKET REGION: North America

PURPOSE: Customer Satisfaction Campaign replacement of the PTC Fluid Heater

Air conditioning and heating may not be adequate within the cabin, a new replacement PTC heater is available to remedy this condition. This affects only a select few vehicles. Confirm the vehicle is on this list before proceeding.

Vehicle Identification Number
50GK41SA3HA000012
50GK41SA7HA000014
50GK41SA0HA000016
50GK41SA4HA000018
50GK41SA6HA000019
50GK41SA2HA000020
50GK41SA4HA000021
50GK41SA6HA000022
50GK41SA8HA000023
50GK41SAXHA000024
50GK41SA4JA000011

Karma Automotive Bulletins and service documents are intended for use by experienced and trained Technicians. If you lack the skills, tools, equipment and a suitable workshop for any procedure described in this document, we suggest you leave such repairs to a Karma retailer and service provider. See your service provider for advice on whether your vehicle may benefit from the information contained within this document. The information contained in the Karma Bulletin is accurate at the date of publication. However, Karma Automotive regularly updates technical information. Please check with your Karma Automotive Retailer and Karma Automotive service provider that the bulletin you intend to use contains the latest available information.

MODEL: Karma Revero

DATE: June 2017

Revised: February 2018

TITLE: PTC Heater Replacement

1. Isolate the 12V battery
    a. Note- have vehicle unlocked, open all the windows before disconnecting
    b. Remove the 10A solar panel fuse as shown (fig.1a)
    c. Disconnect the 12V harness as shown (fig.1b).

fig.1a

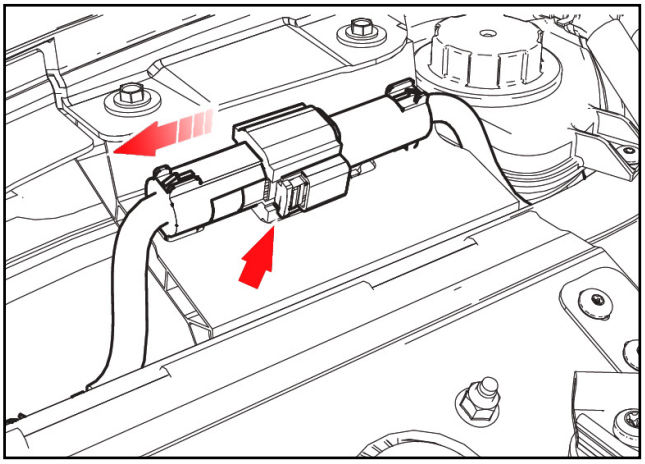

fig.1b

2. Disable High Voltage Electrical System - Remove the Manual Service Disconnect

Electrical System - HIGH VOLTAGE
The High Voltage power system supplies 400 volts at 500 amps. In cases of an accident prevention and recovery, personal protection equipment must be used (as described in the Special Tools list release 00.01.16.0001 available on the retailer portal).

Karma Automotive Bulletins and service documents are intended for use by experienced and trained Technicians. If you lack the skills, tools, equipment and a suitable workshop for any procedure described in this document, we suggest you leave such repairs to a Karma retailer and service provider. See your service provider for advice on whether your vehicle may benefit from the information contained within this document. The information contained in the Karma Bulletin is accurate at the date of publication. However, Karma Automotive regularly updates technical information. Please check with your Karma Automotive Retailer and Karma Automotive service provider that the bulletin you intend to use contains the latest available information.

2.1. Manual Service Disconnect (MSD) - Removal Instructions

Remove the rear seat cushion to expose the manual service disconnect (MSD). to deactivate the high voltage supply to the vehicle, open the left rear door, lift the of lower left rear seat cushion to unlatch it. Under cushion you will find a boxed cover with a locking pin (fig 2a and 2b).

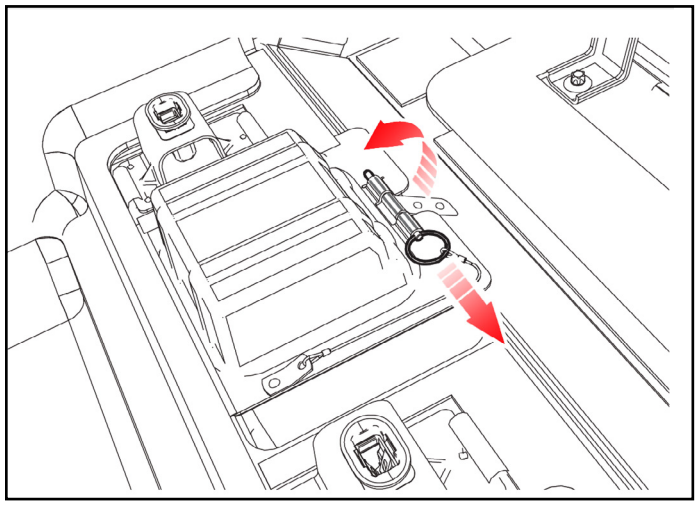

fig.2a

fig.2b

NOTE: The Manual Service Disconnect is a one time use item, discard the original and refit with a new MSD when the returning the vehicle to operation

WARNING

HIGH VOLTAGE battery contains lethal voltage. Do not remove the Manual Service Disconnect (MSD) if the vehicle is switched on or running. Intentional disconnection of the MSD under load could potentially damage the battery pack and cause injury to the person performing the act. Always wear personal protective gear such as insulated gloves and a face shield.

CAUTION

Wait five (5) minutes for high voltage capacitors to discharge after removal of the Manual Service Disconnect (MSD). Although the battery has been disconnected residual current may still be present.

Karma Automotive Bulletins and service documents are intended for use by experienced and trained Technicians. If you lack the skills, tools, equipment and a suitable workshop for any procedure described in this document, we suggest you leave such repairs to a Karma retailer and service provider. See your service provider for advice on whether your vehicle may benefit from the information contained within this document. The information contained in the Karma Bulletin is accurate at the date of publication. However, Karma Automotive regularly updates technical information. Please check with your Karma Automotive Retailer and Karma Automotive service provider that the bulletin you intend to use contains the latest available information.

2.1.1 Release the latch pin from the MSD latch (fig.3a,3b,and 3c). Lift cover for access, release clip and remove the MSD from the HV battery

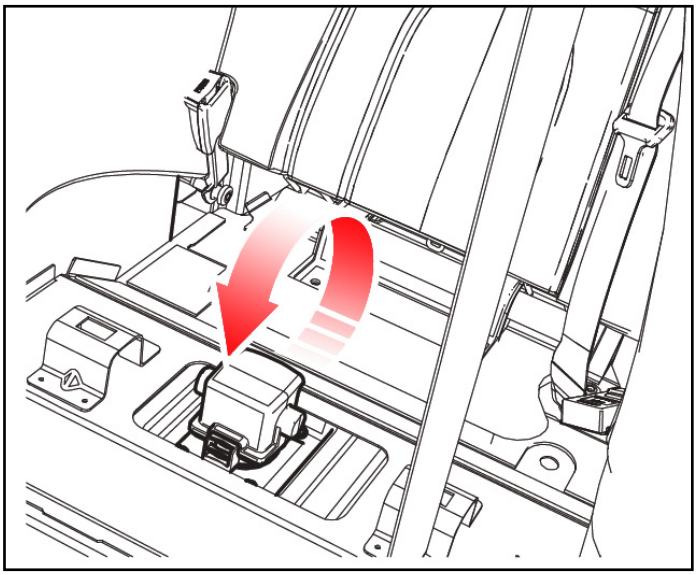

fig.3a

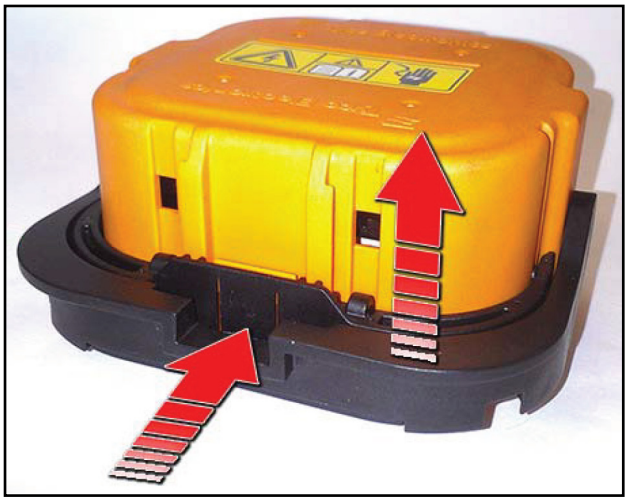

fig.3b

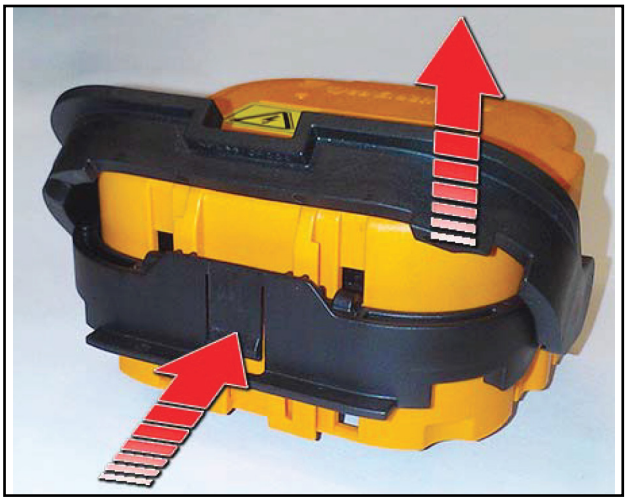

fig.3c

Karma Automotive Bulletins and service documents are intended for use by experienced and trained Technicians. If you lack the skills, tools, equipment and a suitable workshop for any procedure described in this document, we suggest you leave such repairs to a Karma retailer and service provider. See your service provider for advice on whether your vehicle may benefit from the information contained within this document. The information contained in the Karma Bulletin is accurate at the date of publication. However, Karma Automotive regularly updates technical information. Please check with your Karma Automotive Retailer and Karma Automotive service provider that the bulletin you intend to use contains the latest available information.

3. With the hood open- remove the engine cover and proceed to Disconnect MAF sensor harness connector (blue in fig.4)

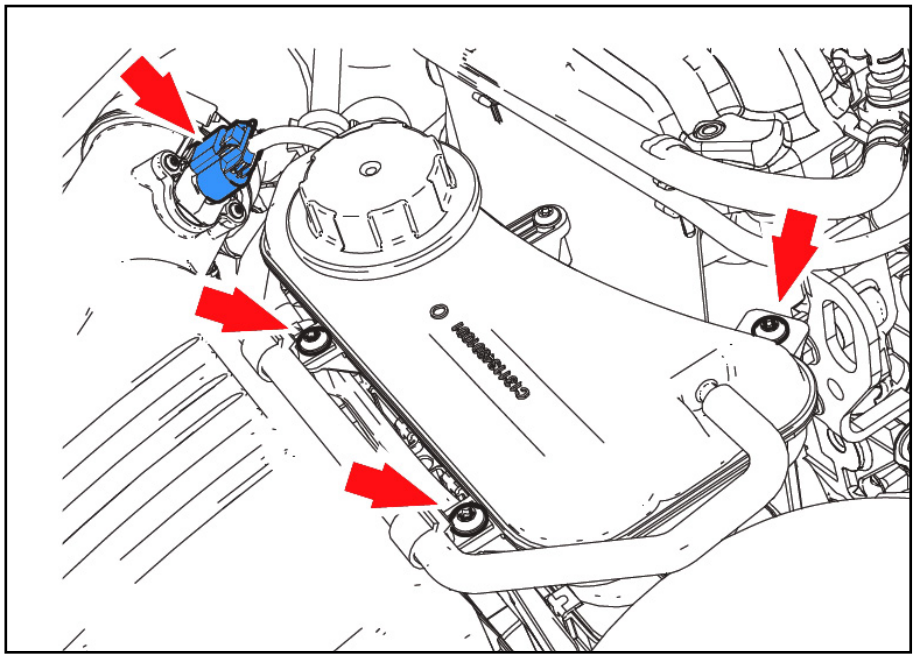

fig.4

4. Remove screws (x3) securing battery low temperature reservoir to PTC mounting bracket
5. Release battery coolant reservoir from mounting and tie aside for access (fig.5)
6. Clamp coolant hoses either side of PTC heater as close to connections as possible

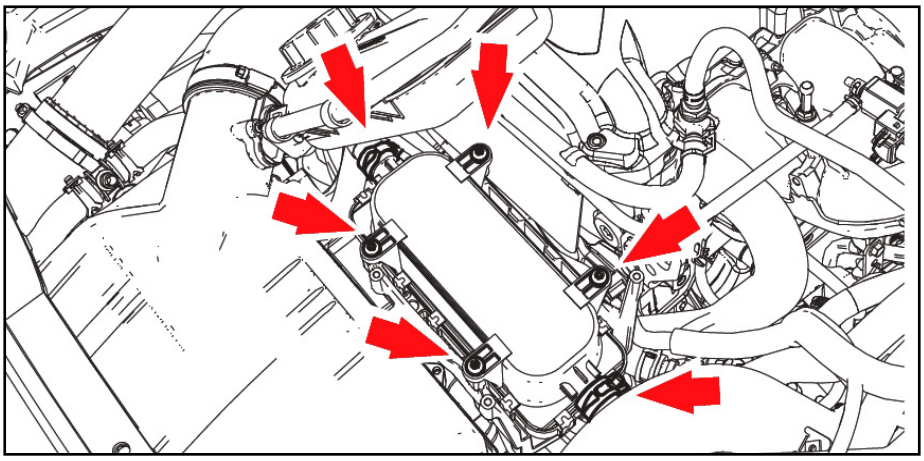

fig.5

Karma Automotive Bulletins and service documents are intended for use by experienced and trained Technicians. If you lack the skills, tools, equipment and a suitable workshop for any procedure described in this document, we suggest you leave such repairs to a Karma retailer and service provider. See your service provider for advice on whether your vehicle may benefit from the information contained within this document. The information contained in the Karma Bulletin is accurate at the date of publication. However, Karma Automotive regularly updates technical information. Please check with your Karma Automotive Retailer and Karma Automotive service provider that the bulletin you intend to use contains the latest available information.

7. Release clips and disconnect coolant hoses from PTC heater

Note: Place suitable absorbent material around the affected area to absorb any possible fluid spillage.

CAUTION

Plug all open connections to prevent ingress of moisture and dirt.

8. Remove screws (x4) securing PTC heater to mounting bracket

9. Raise PTC heater and disconnect the orange high voltage connector and low voltage harness connectors (fig. 6)

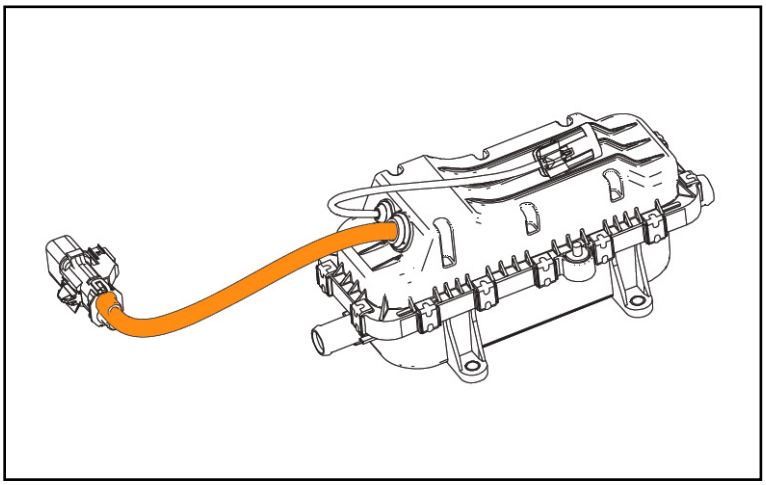

Note: Ensure clean component mating faces, prior to installation of the new unit

INSTALLATION

1. Installation procedure is reverse of removal except for the following priming and bleeding procedure

Karma Automotive Bulletins and service documents are intended for use by experienced and trained Technicians. If you lack the skills, tools, equipment and a suitable workshop for any procedure described in this document, we suggest you leave such repairs to a Karma retailer and service provider. See your service provider for advice on whether your vehicle may benefit from the information contained within this document. The information contained in the Karma Bulletin is accurate at the date of publication. However, Karma Automotive regularly updates technical information. Please check with your Karma Automotive Retailer and Karma Automotive service provider that the bulletin you intend to use contains the latest available information.

2. Prime PTC heater with coolant prior to connecting final hose
   - Top off the reservoir, leave off the cap then put in Accessory Mode
   - Place in Heater and Defrost to allow the air to move through the system

To properly bleed the coolant system the wipers and cowl cover need to be removed.

3. Remove the windshield wipers
   a. Mark the fitted position of the wiper arm to reinstall it at the same park location
   b. Remove the nut (install torque 25Nm) (fig. 7a)
   c. Release clip securing the washer nozzle to wiper arm and release
   d. disconnect hose. (note routing for easier install) (fig. 7b)

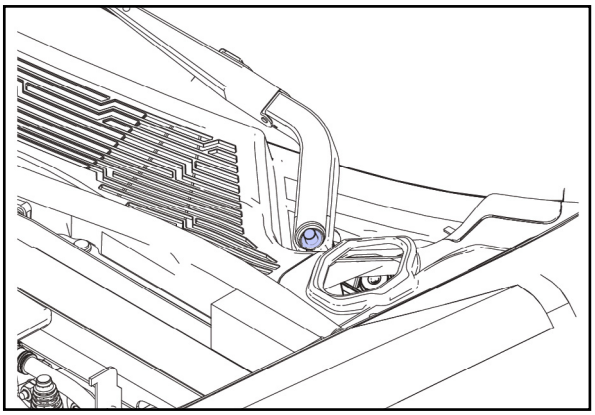

fig.7a

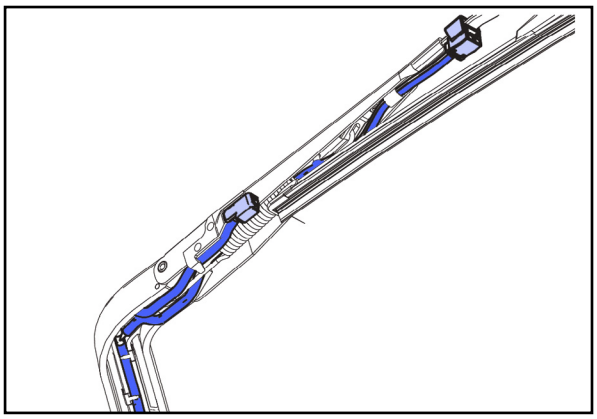

fig.7b

4. Remove the cowl screen
   a. Remove the rear hood seal from the cover (fig. 8a)
   b. Remove the clips (x7) securing the cowl to the body, disconnect the drain tube on LH side
   c. Remove cowl (indicated by arrow)

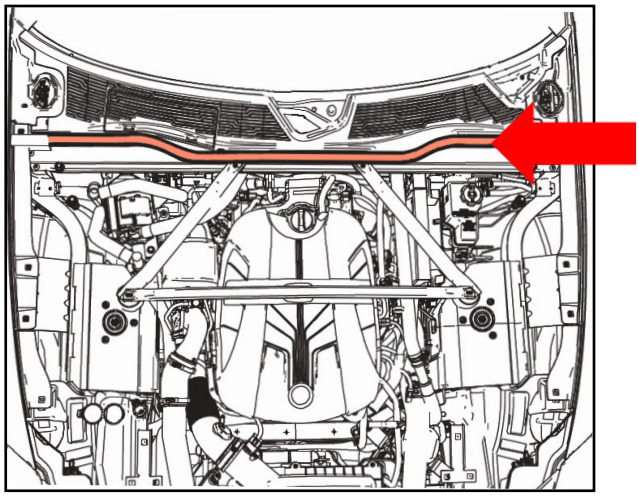

fig. 8a

Karma Automotive Bulletins and service documents are intended for use by experienced and trained Technicians. If you lack the skills, tools, equipment and a suitable workshop for any procedure described in this document, we suggest you leave such repairs to a Karma retailer and service provider. See your service provider for advice on whether your vehicle may benefit from the information contained within this document. The information contained in the Karma Bulletin is accurate at the date of publication. However, Karma Automotive regularly updates technical information. Please check with your Karma Automotive Retailer and Karma Automotive service provider that the bulletin you intend to use contains the latest available information.

5. Remove the cowl brace and the wiper module -to access the heater hose below.
   a. Remove screws (x2) securing plenum chamber brace to bulkhead. Torque - 25 Nm (fig.9a)
   b. Disconnect wiper motor connector (fig.9b)
   c. Remove screw securing wiper motor to bulkhead. Torque - 25 Nm (fig.9c)
   d. Remove screw securing wiper motor to bulkhead brace. Torque - 25 Nm (fig.9d)
   e. Remove bulkhead brace (fig.9d)
   f. Remove wiper motor assembly, LH mounting screw. Torque - 25 Nm (fig.9e) - there are 2 zipties and 1 bolt underneath the flip up
   g. Install is reverse of removal

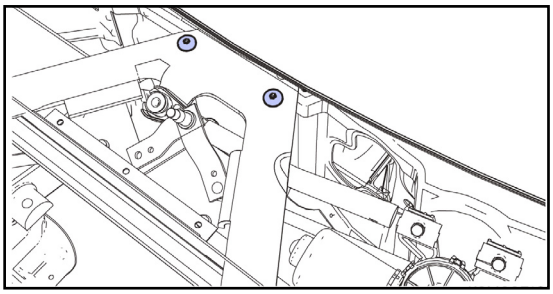

fig.9a

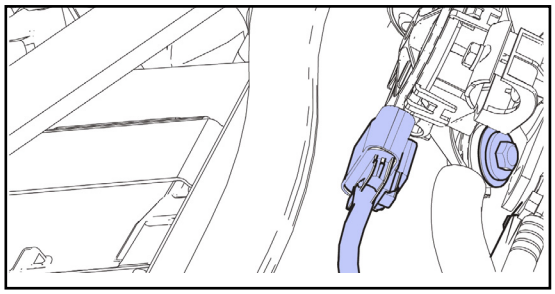

fig. 9b

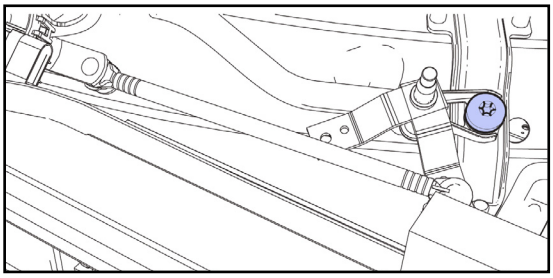

fig. 9c

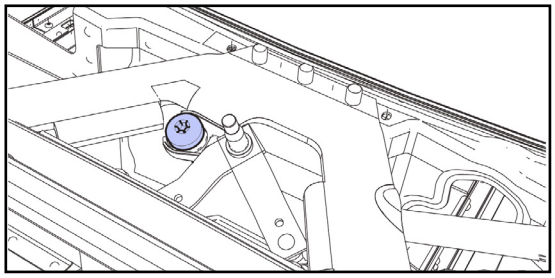

fig. 9d

NOTE: There is a nut and bolt here, it is not captured, have a magnet ready to capture these as they are loosened.

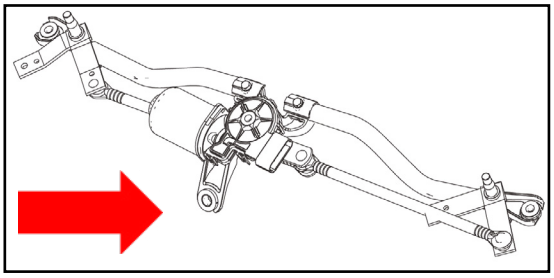

fig. 9e

Karma Automotive Bulletins and service documents are intended for use by experienced and trained Technicians. If you lack the skills, tools, equipment and a suitable workshop for any procedure described in this document, we suggest you leave such repairs to a Karma retailer and service provider. See your service provider for advice on whether your vehicle may benefit from the information contained within this document. The information contained in the Karma Bulletin is accurate at the date of publication. However, Karma Automotive regularly updates technical information. Please check with your Karma Automotive Retailer and Karma Automotive service provider that the bulletin you intend to use contains the latest available information.

6.Bleeding the system

a. Remove the clamp from the heater core out hose connection (upper hose not connected to pump- (fig.10a)
b. Use a soft pry- or 90 degree tool, and gap the hose end off the connector to allow to burp the system (fig.10b)
c. Have the vehicle in Stealth Mode with the heater enabled Maximum heat is not required to run the pump on high, however max heat periodically will aid in verification that heat is coming out of the vents (this has been successfully performed with vehicle in ACC Mode with Defrost on)
d. Make sure PTC hoses get hot, this may take several minutes, to bleed at heater core.

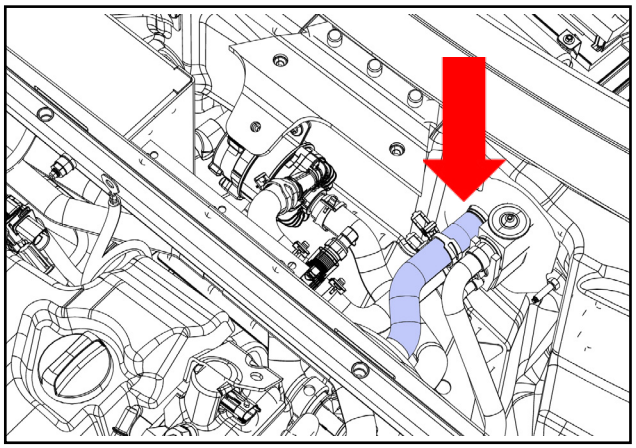

fig. 10a

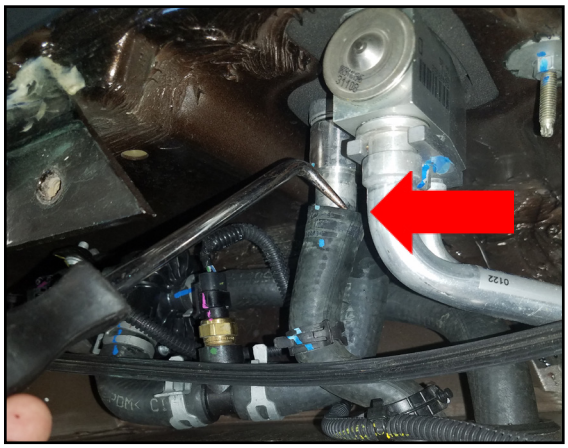

fig. 10b

NOTE: Coolant may spill on the ground and on the hot surfaces in the engine compartment. Keep the vehilce clean as coolant may be smelled in the cabin after this procedure is complete

7. Check coolant level and top up coolant reservoir as needed
8. Reconnect hose, reassemble wiper motro and cowl
9. Clean the vehicle and return to operation.

Karma Automotive Bulletins and service documents are intended for use by experienced and trained Technicians. If you lack the skills, tools, equipment and a suitable workshop for any procedure described in this document, we suggest you leave such repairs to a Karma retailer and service provider. See your service provider for advice on whether your vehicle may benefit from the information contained within this document. The information contained in the Karma Bulletin is accurate at the date of publication. However, Karma Automotive regularly updates technical information. Please check with your Karma Automotive Retailer and Karma Automotive service provider that the bulletin you intend to use contains the latest available information.

MODEL: Karma Revero

DATE: June 2017

Revised: February 2018

TITLE: PTC Heater Replacement

PARTS REQUIRED:

PART NUMBER	DESCRIPTION
C171000000254	PTC Fluid Heater
C131118002001	Manual Service Disconnect

SHOP SUPPLIES:

DESCRIPTION
N/A

SPECIAL TOOLS:

DESCRIPTION
N/A

CAUSAL PART:

PART NUMBER	DESCRIPTION
C131133301002	PTC FLUID HEATER

LABOR CODES:

CODE	DESCRIPTION	TIME	DEFECT CODE
20-40-05-01	PTC Fluid Heater Replacement Bulletin	1.3	20-40-05-33

SUBLET:

CODE	DESCRIPTION	AMOUNT
FLU - FLU003	Coolant	1 Gal. (3.8 L) max $12.00 (USD)

WARRANTY DISPOSITION: This repair is covered under the New Vehicle Limited Warranty, in effect for five (5) years from the in-service date with no mileage limitation.

Karma Automotive Bulletins and service documents are intended for use by experienced and trained Technicians. If you lack the skills, tools, equipment and a suitable workshop for any procedure described in this document, we suggest you leave such repairs to a Karma retailer and service provider. See your service provider for advice on whether your vehicle may benefit from the information contained within this document. The information contained in the Karma Bulletin is accurate at the date of publication. However, Karma Automotive regularly updates technical information. Please check with your Karma Automotive Retailer and Karma Automotive service provider that the bulletin you intend to use contains the latest available information.