Service Bulletin
ADLSD Suspensions

ADLSD Shim and Spacer Installation, Bushing Inspection and Equalizing Blade Wear

May 2017

Introduction

Neway®, a SAF-HOLLAND® division, has identified some suspension installation and monitoring issues on the ADLSD-120 suspension used on 29' Gillig buses manufactured between 2007 and 2017. The following provides information on correct shim/spacer locations, bushing inspection, equalizing beam blade out of service wear criteria and bushing shim installation to extend the service life of the suspension.

Model Identification

The serial tag is found on the underside of the transverse beam ***(Figure 1)***. The serial tag contains important suspension information including the part number ***(Figure 2)***. The affected part numbers are as follows:

- 33100270
- 33100295
- 33100320

Bushing Inspection

Suspension bushing inspection is required during regularly scheduled preventative maintenance. If any of the pivot, axle adapter, or transverse beam bushings appear to be worn showing permanent core displacement it is recommended to replace the bushings. The allowable radial bushing core displacement is 0.20" (5.0 mm) ***(Figure 3)***. The service kit shown on Page 6 was created for Gillig ADLSD bushing replacement.

IMPORTANT: The use of oil-based lubricants, brake fluid or never-seez® will lead to degradation of bushing rubber resulting in accelerated wear out or separation from core. SAF-HOLLAND recommends International Products P80 or similar "rubber friendly" products to aid in bushing insertion.

Figure 1

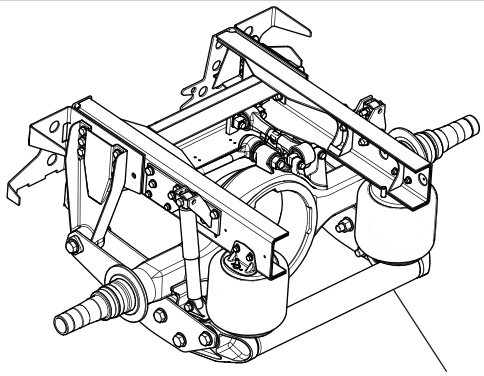

SERIAL NUMBER TAG (UNDERSIDE OF THE TRANSVERSE BEAM)

Figure 2

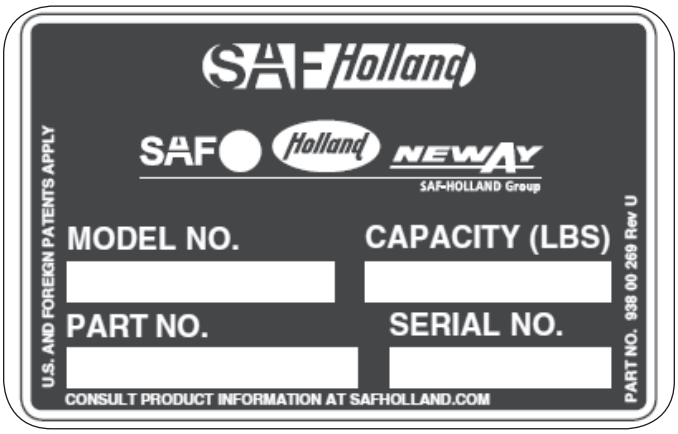

Figure 3

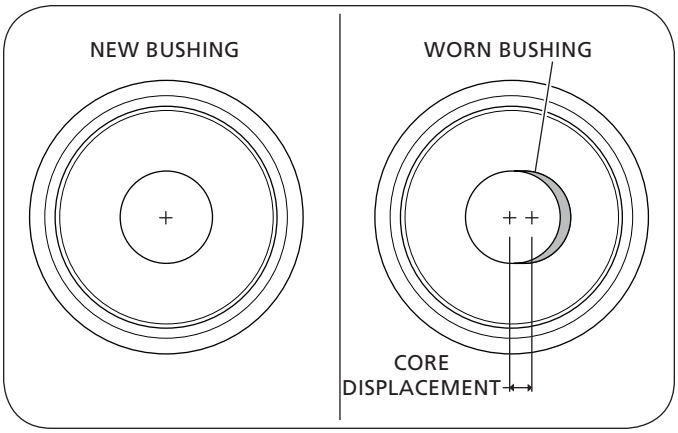

XL-AS20073SB-en-US · 2017-05-30 · Amendments and Errors Reserved · © SAF-HOLLAND, Inc., SAF-HOLLAND, HOLLAND, SAF, and logos are trademarks of SAF-HOLLAND S.A., SAF-HOLLAND GmbH, and SAF-HOLLAND, Inc.

Shim and Spacer Installation

Figure 4 shows the correct placement for both the C-Shaped washer and the plastic shim.

IMPORTANT: The use of additional washers or shims in any other locations than shown will restrict the suspension movement which could lead to blade failure.

Equalizing Beam Blade Wear

During a regularly scheduled preventative maintenance inspection, inspect the equalizing beam blades for wear at all connection points. Some surface wear is acceptable and is only considered excessive if the wear is deeper than .06" (1.6 mm) from the normal surface. If the wear is deemed excessive, equalizing beam blade replacement is recommended. Determine the equalizing beam type (fixed or adjustable) to determine which service kit to use ***(Figure 5)***.

NOTE: If your suspension has a welded alignment, the replacement will be a non-welded alignment style blades and include an alignment collar ***(Figure 6)***. Service kits shown on pages 4 and 5 were created for Gillig ADLSD blade replacement.

The following replacement instructions are to be used in conjunction with XL-AK400-01 to ensure safety.

Figure 5

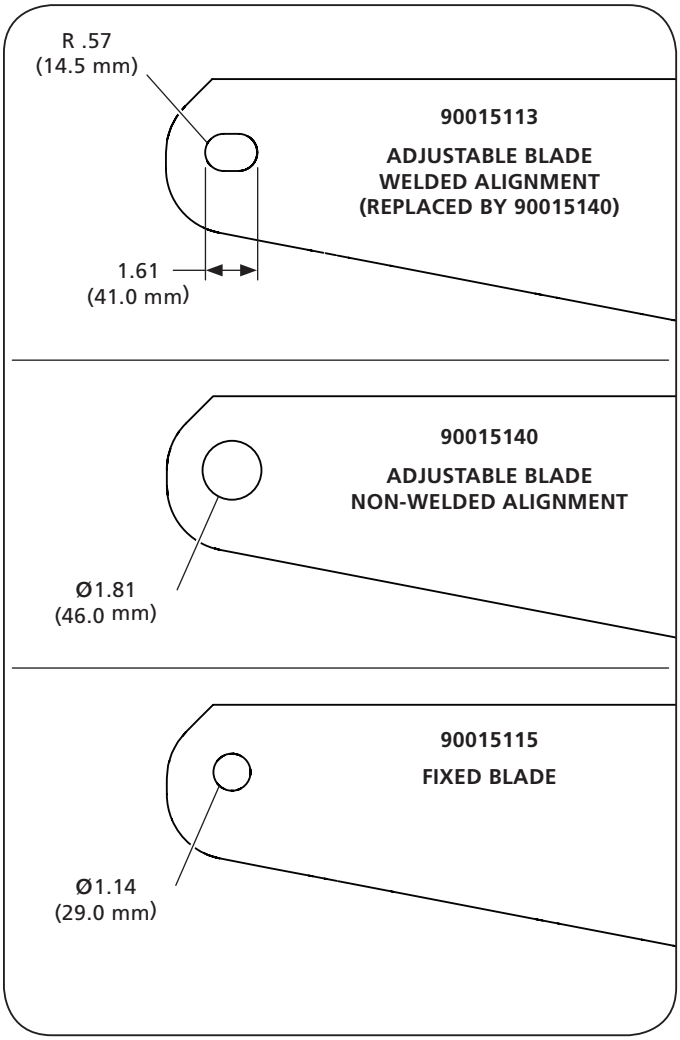

Figure 4

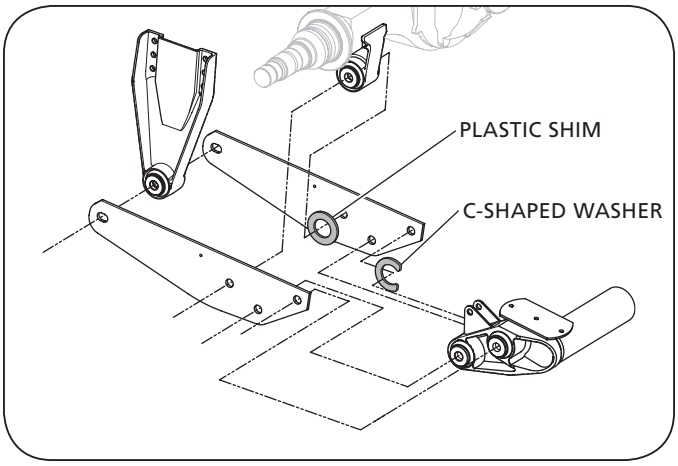

Figure 6

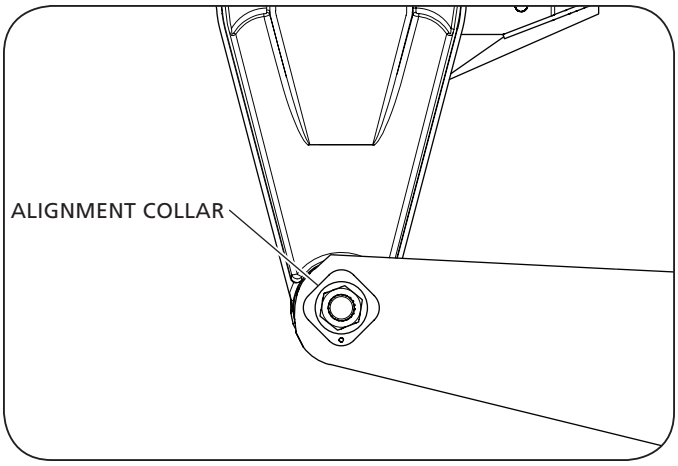

Equalizing Beam Blade Replacement

Following all general safety precautions and procedures described in XL-AK400-01, remove all equalizing beam blade fasteners. Discard both blades, pivot shim and all fasteners. Retain C-Shaped washer for future use.

IMPORTANT: SAF-HOLLAND recommends that all equalizing beam bushings be replaced at this time.

Prior to replacing equalizing beam blades, measure all connection points as illustrated ***(Figure 7)***.

IMPORTANT: Measurement should not include bushing core offset and should be outside widths of castings as close to bushing receptacle edges as possible.

If the axle adapter is greater than .25" (6.4 mm) wider than other attachement points a bushing shim kit is required. Refer to Page 7 for bushing shim service kit and shim location.

NOTE: The purpose of the shim is to get the frame bracket, axle adapter and transverse beam connections within .25" (6.4 mm) or less measured across their widths.

Bushing shims are to be clamped between bushing core and equalizing beam blades.

Reinstall new components and tighten fasteners so all components are secure, but do not tighten to torque specifications.

IMPORTANT: SAF-HOLLAND recommends that the suspension be set to ride height ± .25" (± 6.4 mm) prior to tightening fasteners to required torque to prevent bushing windup.

Torque all new fasteners, with the exception of the adjustable pivot fastener to 800-850 ft-lb. (1085-1153 N•m). Torque adjustable pivot fastener after axle alignment is completed to specifications above.

IMPORTANT: Axle track must be centered within ± .13" (± 3.2 mm) when measured at ride height.

Figure 7

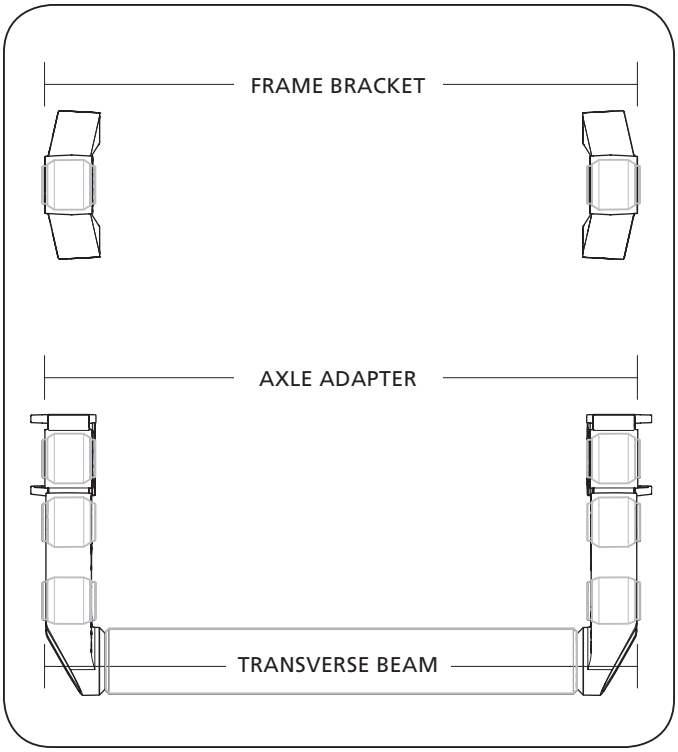

XL-AS20073SB-en-US · 2017-05-30 · Amendments and Errors Reserved · © SAF-HOLLAND, Inc., SAF-HOLLAND, HOLLAND, SAF, and logos are trademarks of SAF-HOLLAND S.A., SAF-HOLLAND GmbH, and SAF-HOLLAND, Inc.

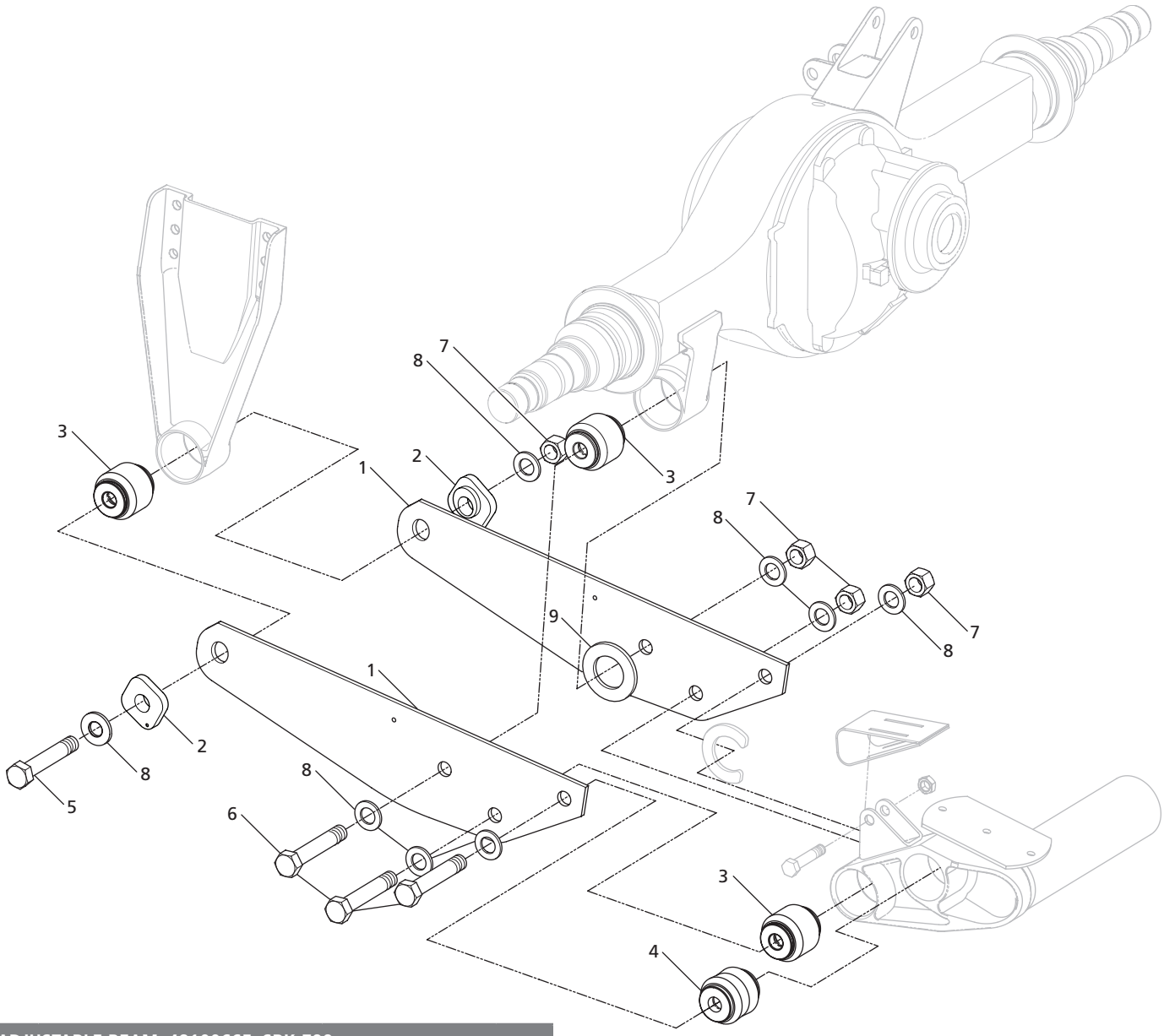

ADJUSTABLE BEAM: 48100665, SRK-799			
ITEM	DESCRIPTION	PART NUMBER	QTY.
1	Beam, Equalizing – ADJ	90015140	2
2	Block, Alignment	90008268	2
3	Bushing	90008191	3
4	Bushing	90008241	1
5	Bolt, Hex – 1.13-7 x 7.5 GR 8	93004541	1
6	Bolt, Hex – 1.13-7 x 7 GR 8	93004529	3
7	Nut, Hex – 1.13-7 GR C	93400506	4
8	Washer, Flat – 1.13 Narrow	93600174	8
9	Shim, Pivot	90036268	1
10	Service Bulletin (Not Shown)	XL-AS20073SB-en-US	1

NOTE: This kit services one side of the suspension ONLY.

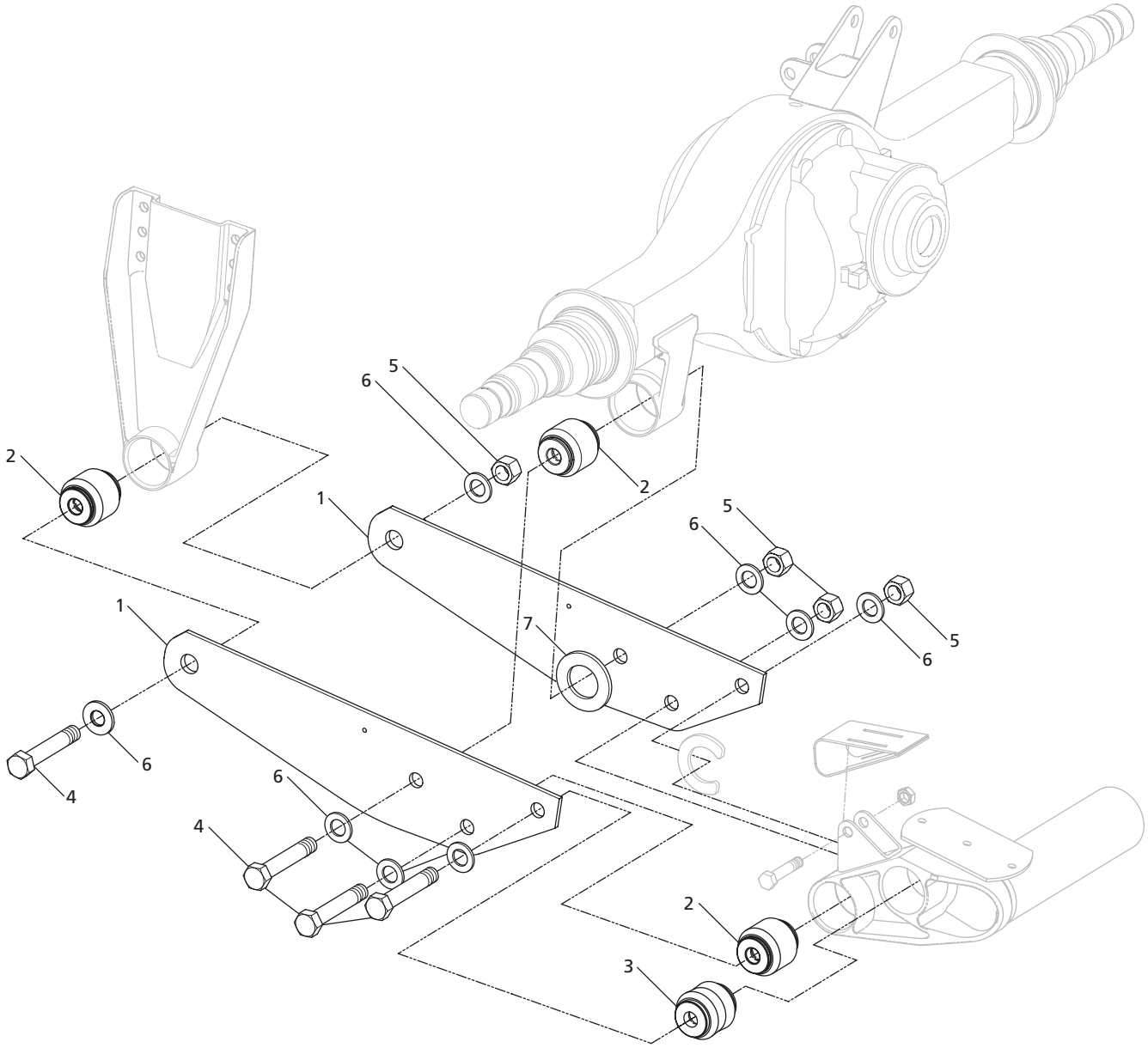

FIXED BEAM: 48100666, SRK-800			
ITEM	DESCRIPTION	PART NUMBER	QTY.
1	Beam, Equalizing – FIXED	90015115	2
2	Bushing	90008191	3
3	Bushing	90008241	1
4	Bolt, Hex – 1.13-7 x 7 GR 8	93004529	4
5	Nut, Hex – 1.13-7 GR C	93400506	4
6	Washer, Flat – 1.13 Narrow	93600174	8
7	Shim, Pivot	90036268	1
8	Service Bulletin (Not Shown)	XL-AS20073SB-en-US	1

NOTE: This kit services one side of the suspension ONLY.

XL-AS20073SB-en-US · 2017-05-30 · Amendments and Errors Reserved · © SAF-HOLLAND, Inc., SAF-HOLLAND, HOLLAND, SAF, and logos are trademarks of SAF-HOLLAND S.A., SAF-HOLLAND GmbH, and SAF-HOLLAND, Inc.

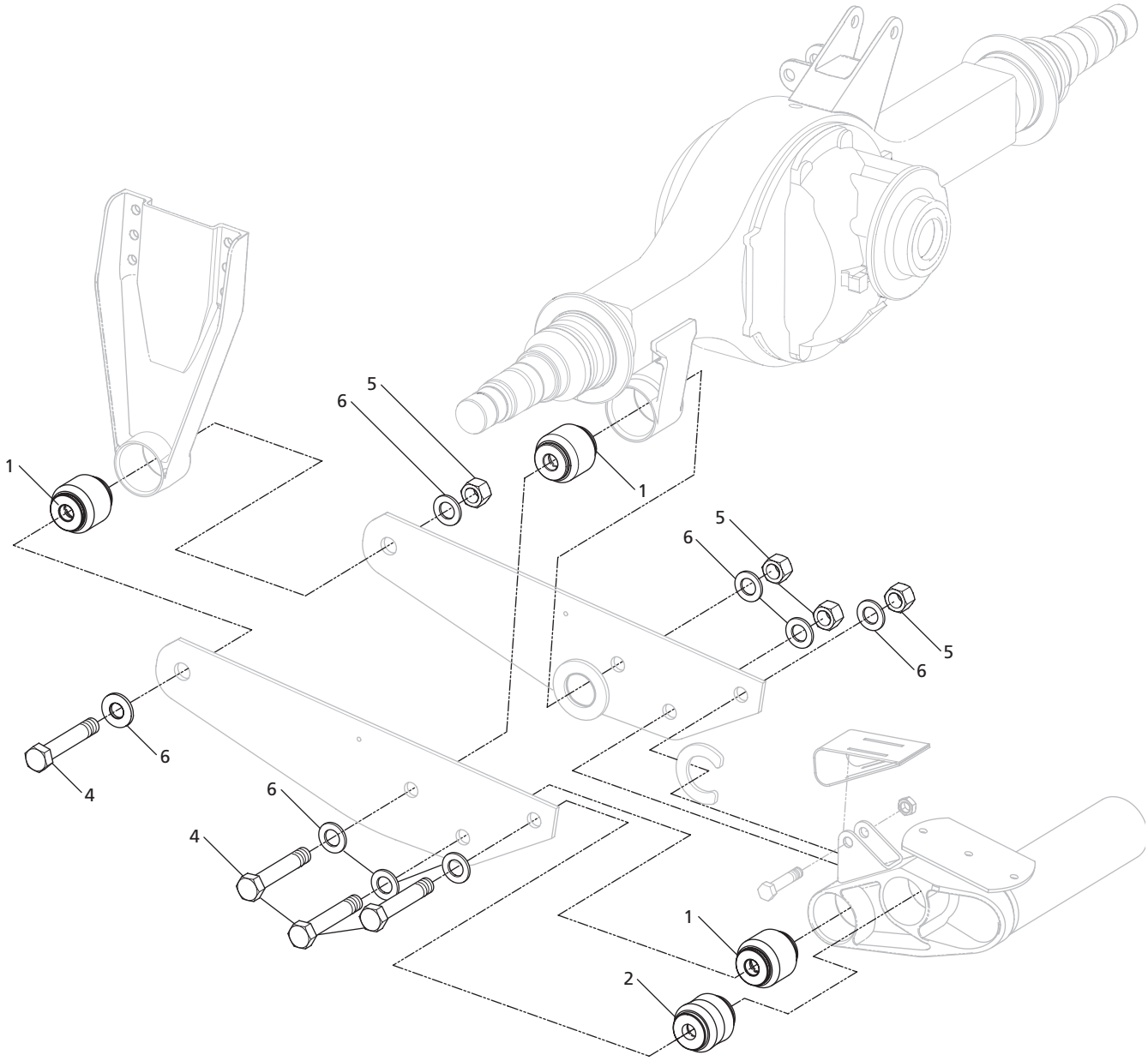

BUSHING KIT: 48100667, SRK-801			
ITEM	DESCRIPTION	PART NUMBER	QTY.
1	Bushing	90008191	6
2	Bushing	90008241	2
3	Bolt, Hex – 1.13-7 x 7.5 GR 8	93004541	1
4	Bolt, Hex – 1.13-7 x 7 GR 8	93004529	7
5	Nut, Hex – 1.13-7 GR C	93400506	8
6	Washer, Flat – 1.13 Narrow	93600174	16
7	Service Bulletin (Not Shown)	XL-AS20073SB-en-US	1

NOTE: This kit services BOTH sides of the suspension.

ADJUSTABLE BLADE

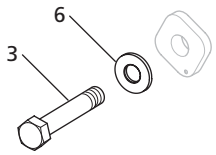

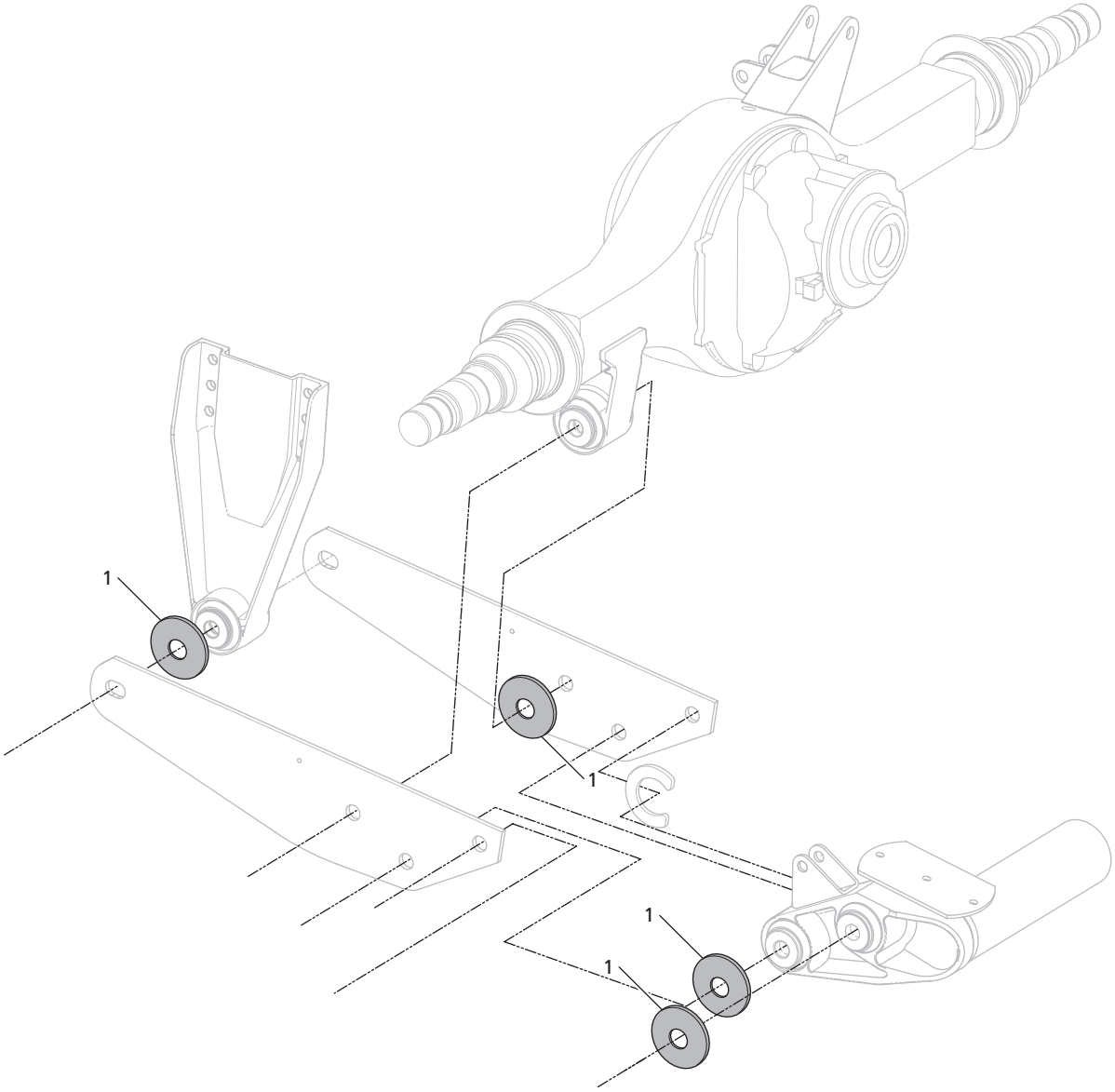

BUSHING SHIM KIT: 48100668, SRK-802			
ITEM	DESCRIPTION	PART NUMBER	QTY.
1	Spacer, Bushing	90036309	8
2	Service Bulletin (Not Shown)	XL-AS20073SB-en-US	1

NOTE: This kit services BOTH sides of the suspension.

XL-AS20073SB-en-US · 2017-05-30 · Amendments and Errors Reserved · © SAF-HOLLAND, Inc., SAF-HOLLAND, HOLLAND, SAF, and logos are trademarks of SAF-HOLLAND S.A., SAF-HOLLAND GmbH, and SAF-HOLLAND, Inc.

ORIGINAL PARTS™

From fifth wheel rebuild kits to suspension bushing repair kits, SAF-HOLLAND Original Parts are the same quality components used in the original component assembly.

SAF-HOLLAND Original Parts are tested and designed to provide maximum performance and durability. Will-fits, look-alikes or, worse yet, counterfeit parts will only limit the performance potential and could possibly void SAF-HOLLAND's warranty. Always be sure to spec SAF-HOLLAND Original Parts when servicing your SAF-HOLLAND product.

SAF-HOLLAND USA • 888.396.6501 • Fax 800.356.3929
www.safholland.us

SAF-HOLLAND CANADA • 519.537.3494 • Fax 800.565.7753
WESTERN CANADA • 604.574.7491 • Fax 604.574.0244
www.safholland.ca

SAF-HOLLAND MEXICO • 52.55.5362.8743 • Fax 52.55.5362.8743
www.safholland.com.mx

info@safholland.com

XL-AS20073SB-en-US · 2017-05-30· Amendments and Errors Reserved · © SAF-HOLLAND, Inc., SAF-HOLLAND, HOLLAND, SAF, and logos are trademarks of SAF-HOLLAND S.A., SAF-HOLLAND GmbH, and SAF-HOLLAND, Inc.

SAF-HOLLAND INC.
1950 Industrial Blvd., Muskegon, MI 49442
www.safholland.com

Engineering Your Road to Success