REPLACING A SLIDE-OUT HYDRAULIC CYLINDER

SLIDE-OUTS

⚠ CAUTION

Moving parts can pinch, crush or cut. Keep clear and use caution.

Purpose

Instructions to replace a hydraulic cylinder on a slide-out.

Instructions

1. Completely extend the slide-out.
2. Measure from the end of the threaded portion of the piston rod to the end of the nylon locking nut (Fig. 1A).

Fig. 1

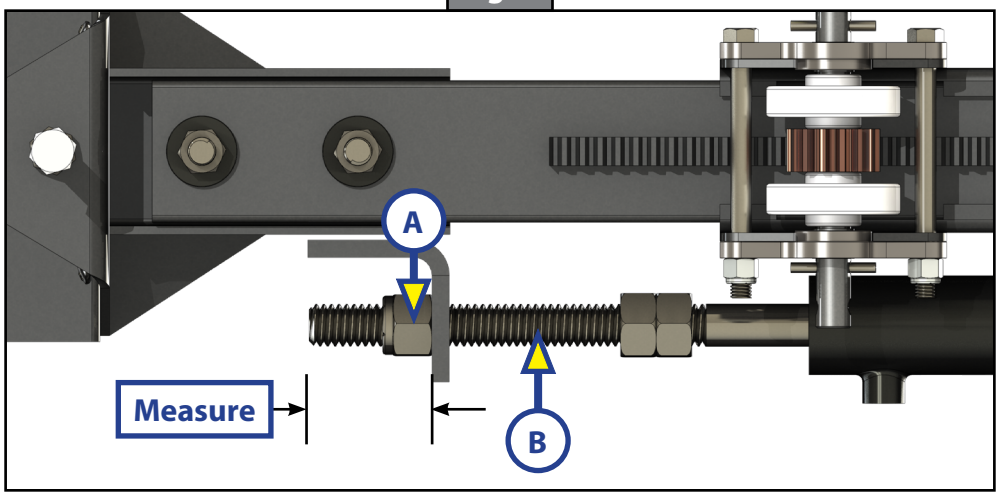

3. Note the exact, measured location of the nut.
4. Remove the nut (Fig. 1A) from the threaded portion of the piston rod (Fig. 1B).
5. Retract the cylinder completely (Fig. 2A).
6. Remove the extend fitting, with the hose attached, from the old cylinder and install it in the extend port (Fig. 2B) of the new cylinder.

NOTE: The new cylinder may have a plastic travel plug installed. Be sure to remove it prior to installing fittings.

Fig. 2

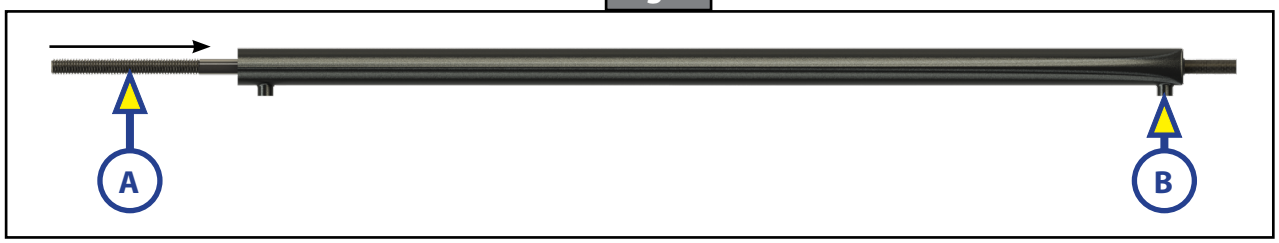

7. Extend the new cylinder (Fig. 3A).

NOTE: This empties the air from the retract side of the piston, thereby preventing air from being introduced into the system.

Fig. 3

8. Remove the retract fitting, with the hose attached, from the old cylinder and install it in the retract port of the new cylinder (Fig. 4A).

Fig. 4

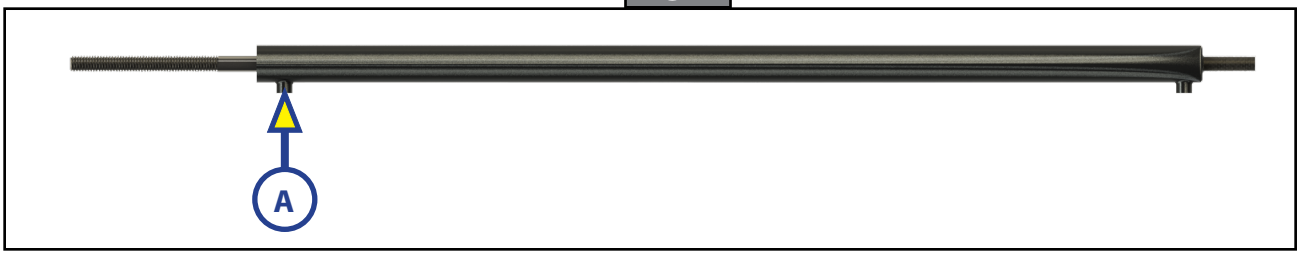

9. Remove the old cylinder from the slide-out system.

10. Install new cylinder, with attached hoses, to the slide-out system.

11. Replace the nylon locking nut to the exact measured location on the new piston rod as it was located on the old piston rod in step 2 (Fig. 1A).

12. Completely retract the slide-out.

13. Extend and retract the slide-out to cycle the slide-out one more time, to purge any residual air that may have entered the system.

14. Check the hydraulic fluid as needed per manufacturer's recommendations, see TI - 188 or go to https://www.lci1.com/support-2-x-2-hydraulic-slide-system. Look for TI - 188: Hydraulic Operation Fluid Recommendation.

15. Check the seal of the slide-out room. If necessary, adjust the slide-out room as per TI - 080 or go to https://www.lci1.com/support-2-x-2-hydraulic-slide-system. Look for TI - 080: Hydraulic Slide-Out Room Adjustments.